Motors for Hazardous Areas

ABB

Making you more competitive

ABB has been manufacturing high quality electric motors and generators for more than 100 years. Motors for hazardous areas represent one of its special areas of focus. Working together with major companies in the oil and gas, petrochemical and chemical industries, ABB has developed a comprehensive range of products that offer safety, reliability and energy efficiency.

The regulatory situation where customers operate, is complex and constantly changing, with the latest developments including the newest European and US standards. ABB not only ensures the relevant regulations but in many cases surpass them.

ABB (www.abb.com) is a leader in power and automation technologies that enable utility and industry customers to improve their performance while lowering environmental impact. The ABB Group of companies operates in around 100 countries and employs about 109.000 people.

Motors for Hazardous Areas

Low voltage, sizes 71 to 450, from 0.25 to 1000 kW
High voltage, sizes 315 to 710, from 110 to 4500 kW

Contents | Page

1	General information	4
2	Low voltage Technical specification	13
3	Low voltage Flameproof motors Ex d - Ex de	35
4	Low voltage Increased safety motors Ex e	65
5	Low voltage Process performance Non-sparking motors Ex nA	97
6	Low voltage General purpose Non-sparking motors Ex nA	119
7	Low voltage Dust ignition proof motors DIP/Ex tD	143
8	High voltage Non-sparking Ex nA and Dust ignition proof motors DIP/Ex tD	199

ABB reserves the right to change the design, technical specification and dimensions without prior notice.

ATEX Directives and International Standards

ATEX Certified

M000167

1

ATEX Directives 94/9/EC ("95") and 1999/92/EC ("137")

ATEX Directives harmonize the safety rules in respect with the free trading principles of the European Community.

The responsibilities are split in two areas between the manufacturers and the end users. The manufacturers have to comply with the 'Essential Health and Safety Requirements' of the Products Directive 94/9/EC, or ATEX 95; and the end users must proceed to make an Explosion Protection Document based on risks assessment of their 'work places' and 'work equipment' to fulfil the 'minimum requirements' listed in the Worker Protection Directive 1999/92/EC or ATEX 137.

Motors comply fully with the ATEX product directive 94/9/EC.

According to the requlations, low voltage motors for hazardous areas are exempted from the Low Voltage Directive, the EMC directive as well as the Machinery Directive.

IEC and the corresponding EN Standards are at the moment in a new process of renewal or revision. In general old and new standard or revision are both in parallel valid for about 3 years. This affects mostly the marking of the motor, occasionally also new technical requirements are introduced.

IECEx Scheme

The IECEx Scheme is an International Certification Scheme covering both apparatus and services for explosive atmospheres, as the internationally accepted means of demonstrating claimed compliance with IEC standards. It comprises the following two international programs:

- IECEx Certified Equipment Program, covering Ex products
- IECEx Certified Service Facilities Program covering Ex Repair and Overhaul Workshops

It is a voluntary scheme which provide confidence that products and services covered by an IECEx certificate meet the specified requirements related to the hazardous area concerned (included Zone 2 / 22) as the internationally accepted means of demonstrating claimed compliance with an IEC Standard.

The management of this Scheme include Certification Bodies of 26 countries around the world (experts, manufacturers, end users, regulators).

For more information please visit www.iecex.com.

ABB is relying on the IECEx Scheme and a large range of Ex motors are tested and certified according to this.

ABB refers to recently updated standards

In the implementation of ATEX 95 and ATEX 137 directives ABB refers to the IEC and EN standards which have been recently updated. Otherwise ABB refers to IEC standards.

Main standards for implementation Worker Protection Directive 1999/92/EC (ATEX 137)	
IEC/EN 60079-10	Classification of hazardous areas (gas areas)
IEC/EN 61241-10	Classification of areas where combustible dusts are or may be present
IEC/EN 60079-14	Installation rules of gas equipment
IEC/EN 61241-14	Selection and Installation of Ex tD (DIP) equipment.
IEC/EN 60079-17	Electrical installations Inspection and maintenance
IEC/EN 60079-19	Equipment Repair and overhaul
Main standards complying with the "EHSR's" of Products Directive 94/9/EC (ATEX 95)	
EN 60079-0	General requirements for gas
EN 61241-0	General requirements for dust
EN 60079-1	Flame proof enclosure 'd'
EN 60079-2	Pressurized enclosure 'p'
EN 60079-7	Equipment protection by increased safety 'e'
EN 60079-15	Construction test and marking of type of protection 'n'
EN 61241-1	Protection by enclosure 'tD'

High efficiency

A Europe-wide agreement defines the efficiency levels for low voltage motors. Efficiency classification does not apply for hazardous area motors, how ever, high efficiency is important also for motors in hazardous areas.

These efficiency levels apply to 2- and 4-pole, three phase squirrel cage induction motors rated for 400 V, 50 Hz with S1 duty class with the output 1.1 to 90 kW.

See web site published by the European Commission for more information on efficiency classes;

http://energyefficiency.jrc.cec.eu.int/.

In addition to the above, all ABB's motor production units are certified to ISO 9001 and ISO 14000.

Motor ranges fulfilling EFF1 efficiency level, although classification does not apply	
Flameproof from	IEC size 160 and above
Increased safety	Not applicable
Non-sparking	Aluminum M3AA 112 and above
	Cast iron from IEC sizes 160 and above
Dust ignition proof	Aluminum M3AA 112 and above
	Cast iron from IEC sizes 160 and above

Hazardous areas

Hazardous areas worldwide are classified by zone, according to the risk posed by explosive gas or dust in the atmosphere.

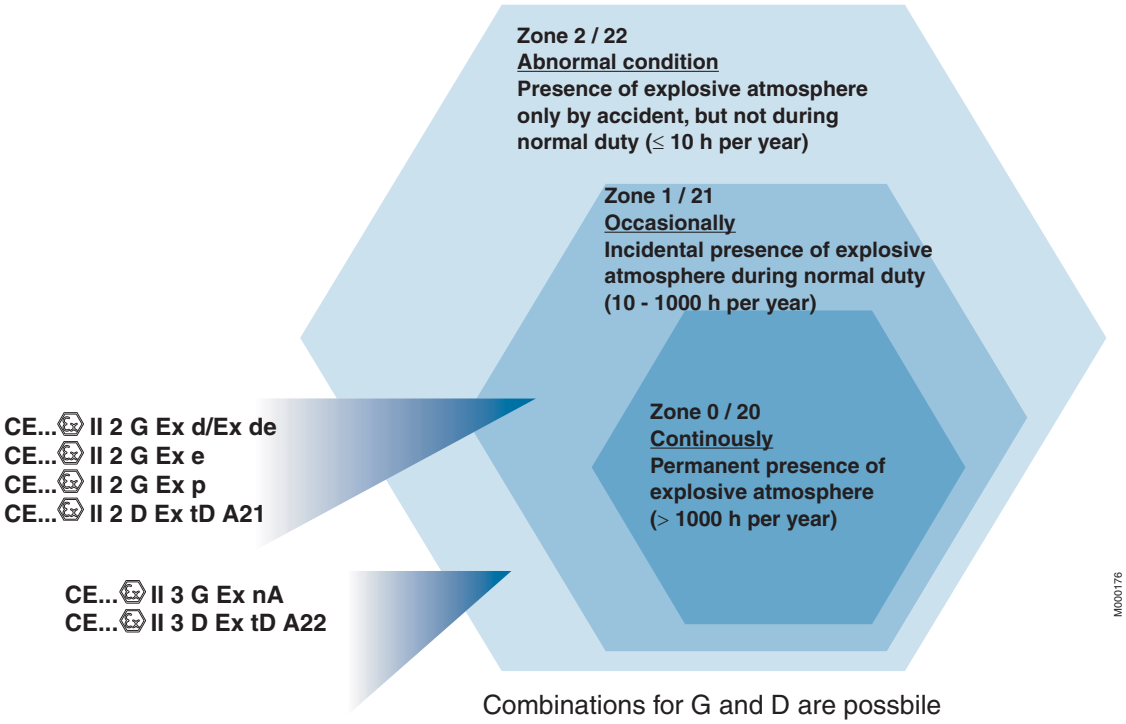

Combinations for G and D are possbile

Classification of hazardous locations according to CENELEC and IEC

The definition of areas according to the presence of atmosphere are set up in the following standards:

IEC/EN 60079-10 Gas
EN 61241-1 Dust

Explosive atmosphere	Permanent presence	Incidental presence (normal operation conditions)	Accidental presence (abnormal operation conditions)
Gas ('G')	**Zone 0**	**Zone 1**	**Zone 2**
Dust ('D' / 'DIP' / 'Ex tD')	**Zone 20**	**Zone 21**	**Zone 22**

Note: In certain countries Ex d and Ex e motors are also used in Zone 2.

Marking temperatures, gas groups and hazardous areas

To ensure equipment can be safety used in potentially explosive atmospheres, the hazardous areas where the equipment is installed must be known. Temperature class of equipment must be compared with the spontaneous ignition temperature of the gas mixtures concerned and its gas group must be known in specific cases (e.g. flame proof protection).

Categories or classification

The ATEX Directive has introduced the concept of "Categories" which is a way of expressing the capability of equipment respecting the EHSR versus the Zone where the equipment is installed.

Category 1	according to Annex 1 of ATEX 95 used in Zone 0 or Zone 20
Category 2	according to Annex 1 of ATEX 95 used in Zone 1 or 21
Category 3	according to Annex 1 of ATEX 95 used in Zone 2 or 22

Classification

	Category equipment	Inflammable substances	Level of protection	Fault protection	Comparison with present practice and IEC
Equipment group I (mines)	**M1**	Methane, dust	Very high level	2 types of protection or 2 independent faults	Group I
	M2	Methane, dust	High level	1 type of protection Normal operation	Group I
Equipment group II (surface)	**1**	Gas, vapours, mist, dust	Very high level	2 types of protection or 2 independent faults	Group II Zone 0 (gas) / Zone 20 (dust)
	2	Gas, vapours, mist, dust	High level	1 type of protection Habitual frequent malfunction	Group II Zone 1 (gas) / Zone 21 (dust)
	3	Gas, vapours, mist, dust	Normal	Required level of protection	Group II Zone 2 (gas) / Zone 22 (dust)

1

Temperature classes

Temperature class	Ignition temperature for the gas/vapour °C	Max. permitted temperature equipment °C
T1	> 450	450
T2	> 300 < 450	300
T3	> 200 < 300	200
T4	> 135 < 200	135
T5	> 100 < 135	100
T6	> 85 < 100	85

Grouping of electrical apparatus

Group I	Apparatus for coal mines susceptible to firedamp
Group II	Apparatus for explosive atmospheres other than mines; surface industries
IIA, IIB, IIC	Group II is subdivided for Ex d and Ex i -equipment according to the severity of the environment. IIC is the highest rating; a motor from one of the higher categories can also be used in a lower category environment

Marking of equipment

Protection type marking:
EEx according to the EN standards series 50000
Ex according to the EN standards series 60079 and 61241

CE Conformity marking

CE 0081 Ex II 2 G

CE marking

Identification of the notified body responsible for the approval. 0081 is the identification number of LCIE

The European Commission mark for Ex products

Motor grouping: II for surface industry (I for mines)

Equipment category: 2 allowed for Zone 1 or Zone 21 (1 for Zone 0 or 20, 3 for Zone 2 or 22)

Atmosphere surrounding the motor: G for explosive gas (D for dust)

Complementary marking for Ex:

Ex d IIB T4

Protection type Ex d = flameproof

Motor grouping II = for surface industry

Temperature class T4 = max. permitted 135°C

Complementary marking for Ex tD:

Ex tD A21 T125°C IP65

Protecion by enclosure

Installation in zone 21

Temperature class

IP protection

Selection of products for hazardous areas

EN Standard for Group II: Gas environments

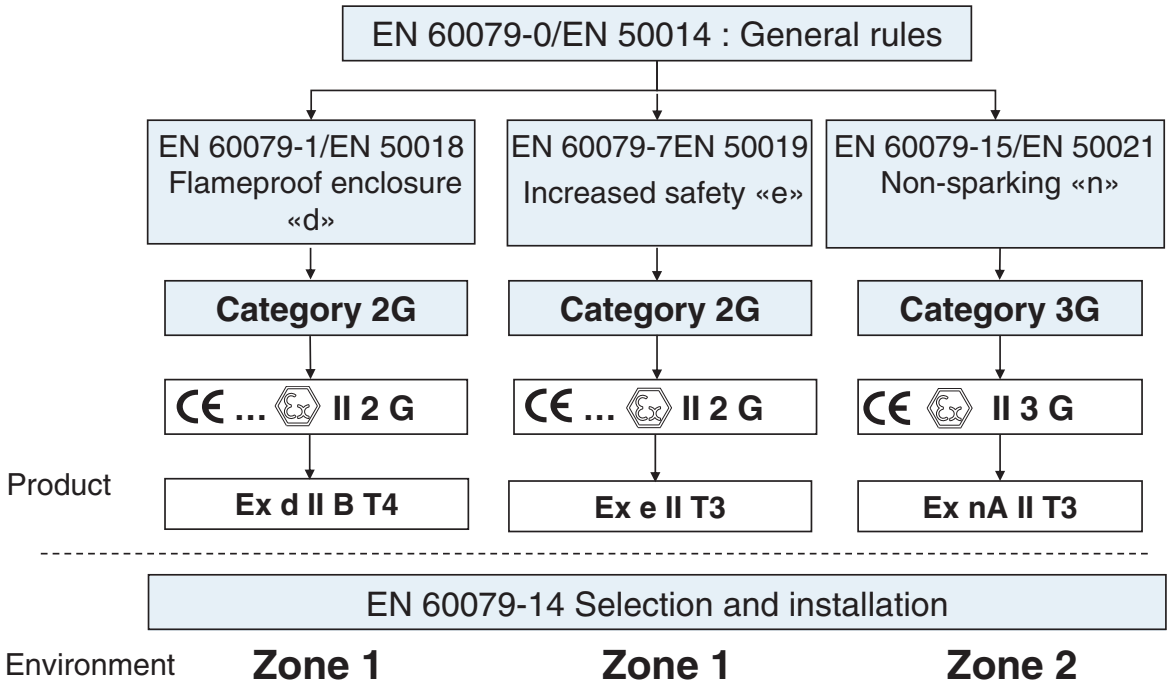

M000170

EN Standard for Group II: Dust environments

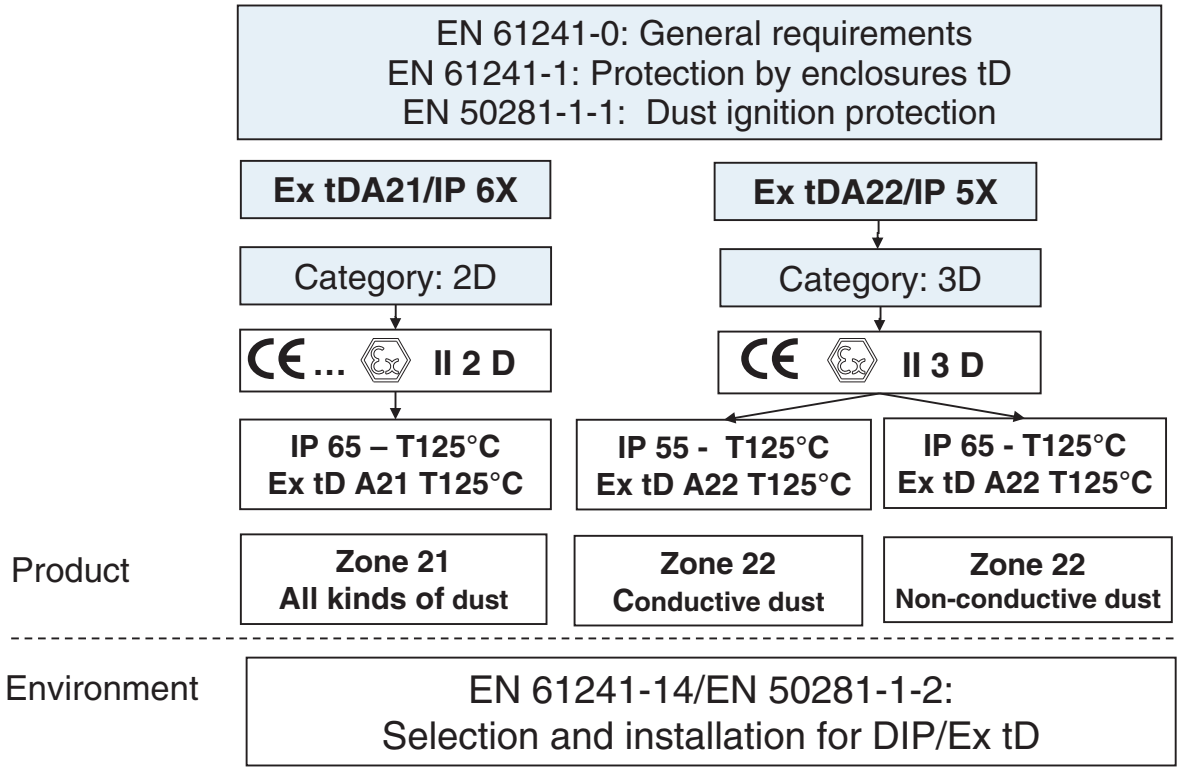

M000171

General about hazardous areas

Preamble

In hazardous areas, it is the utmost importance to ensure the safe use of electrical apparatus. To this end, many countries have regulations concerning both the design and use of such apparatus. These regulations are becoming increasingly harmonized within the framework of IEC recommendations and European Standards.

The hazard may be due to an explosive atmosphere composed of a mixture of gas, vapors or dusts with air. This chapter only deals with safety in explosive gas atmospheres for which European Standards exist.

ABB has a full range of flameproof motors certified according to IECEx.

1

Flameproof enclosure Ex d and Ex de

The motor enclosure shall be designed in such a way that no internal explosion can be transmitted to the explosive atmosphere surrounding the motor. The enclosure must withstand, without damage, any pressure levels caused by an internal explosion. The shape, length and gap of part assembly joints, at shaft opening, cable entries, etc., shall be designed to allow for throttling and cooling of hot gases escaping outside. The standards emphasize the impact of an explosive atmosphere (for instance, explosion pressure) over constructional requirements of such apparatus.

Work on assembly devices of enclosure component parts is only permitted using prescribed tools. Cable entries must meet the requirements of this type of protection.

The temperature of the motor's external enclosure should not exceed the self-ignition temperature of the explosive atmosphere of the installation area during normal operation. For this reason, rated output depends on this rated maximum temperature for the considered area.

No motor device outside the flameproof enclosure (e.g., ventilation) shall be a potential source of sparks, arcs or dangerous overheating.

Variants combining two types of protection usually combine ”d” and ”e” protection. The most commonly used and recognized by the CENELEC European Standards is the Ex de variant. The motor is designed with an Ex d flameproof enclosure, while the terminal box features an Ex e increased safety protection. Such design combines the superior safety degree of the ”d” type of protection with the less stringent electrical connection requirements of increased safety motors.

Motors featuring dual protection are seldom encountered - such as an increased safety motor with a flameproof enclosure designated Ex e / Ex d in European Standards.

Alleinschutz – thermistors as sole protection (optional)

The flameproof motors from ABB, frame sizes 80 to 400, have been certified for thermistors as sole protection against overload. This construction, "Alleinschutz", is available as an option, see variant codes.

"Alleinschutz“ is a term that defines the certification of flameproof motor and protection device together. The certificate confirms that thermistors and relays will switch off the motor in case of overheating before the temperature of the motor's external enclosure exceeds the temperature marking stamped on the rating plate.

Each motor ordered with thermistors as sole protection will be tested, with locked rotor, up to the point where the thermistors trigger the relay to turn off the motor. At the triggering temperature, the motor has to be within the certified temperature class.

The relay is included in the certificate, which means that only approved relays can be used for "Alleinschutz“.

Please note that sizes 315 to 400 require special technical solutions, consult ABB.

Increased safety design, Ex e

The design of this motor type prevents the occurrence of sparks, arcs or hot spots in service (including starting and locked rotor situation), that could reach the self-ignition temperature of the surrounding, potentially explosive atmosphere, in all inner and outer parts of the machine.

This is ensured by applying constructional or dimensional provisions that mainly concern:

- specified minimum values for creepage distances and clearances
- use of tracking-proof isolating materials
- suppression of sharp angles where static electrical loads could build-up
- ensuring electrical and mechanical assemblies are tightly secured
- minimum backlash values between stationary and rotating parts (e.g., air gap, ventilation, etc.)
- temperature-rise limits, taking into account locked rotor, normal operation, accidental mechanical stalling of machine under the most adverse thermal conditions, i.e. when thermal equilibrium of machine is reached while in service.

Temperature rise limits are to be considered for two operating aspects; one for normal operating conditions and the other under accidental stalling conditions.

Temperature rise limits under normal operating conditions

The expected electrical lifespan of a motor depends on its temperature rise for a given insulation class, and on the motor winding temperature, in operation, which is not homogeneous with hot spots appearing.

For these reasons, a safety margin of 10 K is allowed for between windings temperature rise at rated output, as measured by the change of resistance method, and the maximum temperature rise permitted by the winding insulation class.

Temperature rise limits during short circuit under accidental stalling conditions

Should the machine stall while in operation, a short-circuit current nearly equal to the starting current will develop, and stator and rotor winding temperatures will rise rapidly (see figure 1).

To prevent this temperature value from exceeding the temperature level below protection devices must trip within a specified time (t_E). This tripping time depends on the short-circuit current level or the short-circuit current to rated current ratio (I_A/I_N). Figures 2 and 3 show, for commonly used protection devices, the limiting ratio between short-circuit current inrush I_A/I_N and rotor stalling time t_E, according to the EN and VIK.

This type of protection is inappropriate for commutator machines or brake-motors which, by principle, are capable of producing arcs, sparks or hot spots.

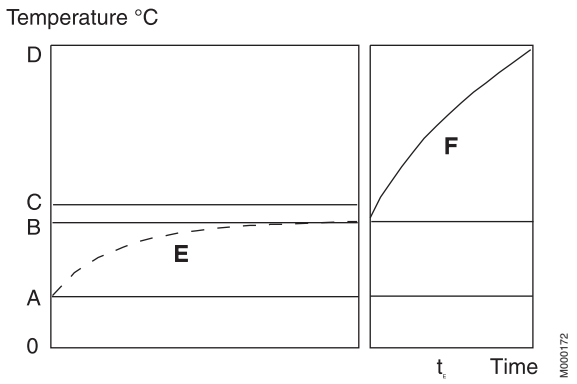

Figure 1.

O = temperature 0°C
A = Max. ambient temperature, reference 40°C
B = Temperature at rated load and at worst voltage conditions
C = Max temperature as permitted by the insul. class
D = Max limit temperature as set by the nature of the potentially explosive atmosphere
E = Temperature-rise curve of motor at rated output and at worst voltage conditions
F = Temp. rise curve under stalled rotor conditions
t_E = stalled rotor time

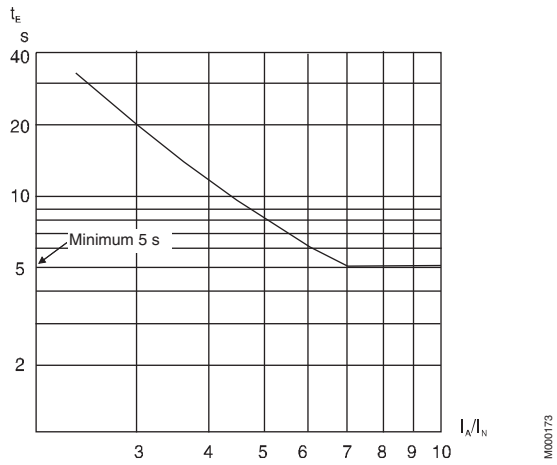

Figure 2. Min. value of time t_E as a function of I_A/I_N *acc. to EN 50019.*

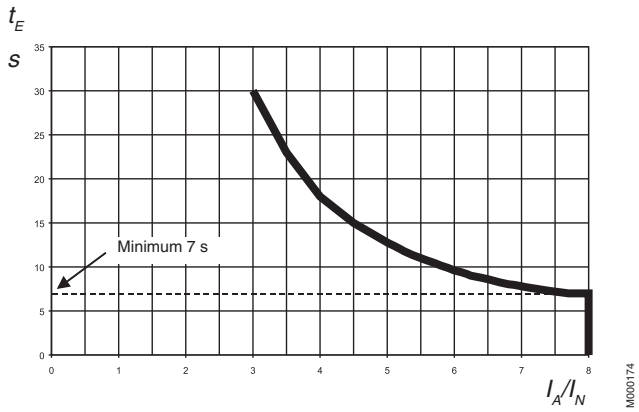

Figure 3. Min. value of time t_E as a function of I_A/I_N *acc. to VIK.*

Non-sparking design, Ex nA

This type of protection is allowed to be used in the hazardous area corresponding to zone 2.

This design is also known as 'Non-sparking' type as the motor must be designed in such a way that no sparks can occur in normal operation, used within the ratings specified by the manufacturer, which excludes thermal requirements due to starting or accidental stalling.

1

Dual certification

Ex nA motors in cast iron frame can also be used for Dust/Ex tD -applications. Following combinations are possible:

– DIP T125°C/Ex tD A22, IP55 for zone 22
– DIP T125°C/Ex tD A22, IP65 for zone 22
– DIP T125°C/Ex tD A21, IP65 for zone 21

ABB provides non-sparking motors certified according to ATEX 95 and IEC.

These features are possible due to the IP protection. The gases penetrate this protection, and thus the inside surface temperature class is T3 (200°C). The ingress of dust, however, is prevented and the dust determines the outside surface temperature class: T 125°C.

Dust ignition protection / Protection by enclosures “tD” in hazardous areas

Combustible dusts is hazardous as it can form potentially explosive atmospheres when dispersed in the air. Furthermore, layers of combustible dust may ignite and act as ignition source for an explosive atmosphere.

Hazardous areas with dust can be found in a variety of industries such as agriculture, chemicals, plastics, stock holding.

Selection and installation of electrical equipment
To ensure equipment can be safely used in hazardous areas with dust, the following procedure should be considered before selecting a product:

1. Type of dust:
- Will a cloud of dust be present around the product or
- will a layer of dust build up on the product and if so, what will be the maximum thickness of the layer between two cleaning/maintenance periods?

2. Characteristics of the dust:
- Is the dust electrically conductive or non-conductive?

3. Ignition temperature of the dust:
- T_{Cl}: Ignition temperature of dust in a "cloud" or
- T_{5mm}: Ignition temperature of a 5 mm dust layer

This protection prevents any explosion transmission of dust because:

- The ingress of dust into the motor is prevented by the IP protection, being either IP55, called dust protected, or IP 65, called dust tight.
- The maximum surface temperature outside the motor must not exceed the temperature class for which the motor is certified.
- No sparks must occur outside the motor enclosure.

1

Selection and installation of product: EN 50281-1-2/EN 61241-14

Equipment category	Category 1 (zone 20)	Category 2 (zone 21)	Category 3 (zone 22)
Minimum protection for equipment	Not applicable for electric motors	Ex tD/IP 6X	Ex tD A22/IP 5X for non-conductive dust Ex tD A22/IP 6X for conductive dust

Marking temperature

Type of dust	Ignition temperature	Maximum surface temperature of motor	Marking temperature of equipment T°C
Cloud	T_{Cl}	2/3 x T_{Cl}	T°C ≤ 2/3 x T_{Cl}
Layer up to 5 mm	T_{5mm}	T_{5mm} – 75 K	T°C ≤ (T_{5mm} – 75 K) or T°C ≤ (2/3 x T_{Cl}) Which ever value is the smallest value

Substances

Products	AIT for a cloud (°C)	AIT for a layer (°C)
PVC	450	330
Sulfur	240	250
Charcoal	520	230
Barley/Corn/Maize	380	280
Sugar	310	420
Wheat	350	270

Source BIA-report 13/97/HVBG AIT = auto ignition temperature

Testing and certificates

Motors for hazardous areas have to be officially approved by a recognized test organization, authorized to issue test certificates, to ensure compliance with standards for this type of equipment.

Motors are defined and classified according to the categories and protection type which are defined in the corresponding standards.

1

Depending on the nature of the atmosphere, it is the responsibility of the user to determine which group and which maximum surface temperature should be specified for the motor installation.

The motors are rated and certified for ambient temperature between –20°C and +40°C according to standards. For ambient temperatures below –20°C and above +40°C certificates are available for most of the motors.

ABB's motors conform to the stringent standards set by CENELEC (European Committee for Electrotechnical Standardization), and are approved by testing laboratories (ExNB: Notified Body). The EU member countries have a common set of standards for motors for hazardous environments.

Motors can be certified by any of the Notified Bodies "ExNB" of EU member countries. These motors are therefore acceptable in all EU countries and many other countries.

Global certificates available are: IEC, IECEx Scheme, ATEX, CSA and CSA / US certificates. Typical national certificates available are e.g. GOST-R for Russia, GOST-K for Kazakhstan, Inmetro for Brazil, CQST for China and KOSHA for Korea. Local certifications are mainly obtained based on IEC or ATEX.

Risk assessment and gas tests

Non-sparking (Ex nA) and increased safety (Ex e) motors have to meet tough requirements with regard to sparking. The latest IEC and EN standards specify criteria for risk assessment and gas environment tests for rotor and stator designs to show that the motors are spark-free in all operational conditions.

By testing and securing certification for its motors, ABB is helping to streamline the risk assessment process for its customers. Due to these tough tests to be fulfilled, it re-inforce the insulation system and increase the time life of products.

The alternative to testing and certification involves, in the majority of cases, equipping the motor with provision for pre-start ventilation. This means investing in a higher capacity air compressor, piping, and a ventilation control unit. It also requires an additional operation – ventilation – every time the motor is started.

Benefits of the ABB approach therefore include reduced initial capital expenditure, lower operating costs, and faster starting. Reliability is improved as no additional components are required. Most importantly, ABB's certified motors offer proven safety, as testing represents the only way to verify that equipment is really safe.

ABB's approach to meet the new requirements

Following a program of gas environment tests in which all rotor and stator tests were passed, ABB has secured certification for its M3GM motors, frame size up to 450 mm.

ABB Low voltage motors has secured certification for its cast iron hazardous area motors with aluminum die cast rotor.

Mechanical and electrical design

Mounting arrangements

	CodeI/CodeII						Product code pos. 12
Foot-mounted motor.	IM B3 IM 1001	IM V5 IM 1011	IM V6 IM 1031	IM B6 IM 1051	IM B7 IM 1061	IM B8 IM 1071	A = foot-mounted, term.box top R = foot-mounted, term.box RHS L = foot-mounted, term.box LHS
Flange-mounted motor, large flange	IM B5 IM 3001	IM V1 IM 3011	IM V3 IM 3031	*) IM 3051	*) IM 3061	*) IM 3071	B = flange mounted, large flange
Flange-mounted motor, small flange	IM B14 IM 3601	IM V18 IM 3611	IM V19 IM 3631	*) IM 3651	*) IM 3661	*) IM 3671	C = flange mounted, small flange
Foot- and flange-mounted motor with feet, large flange	IM B35 IM 2001	IM V15 IM 2011	IM V36 IM 2031	*) IM 2051	*) IM 2061	*) IM 2071	H = foot/flange-mounted, term.box top S = foot/flange-mounted, term.box RHS T = foot/flange-mounted, term.box LHS
Foot- and flange-mounted motor with feet, small flange	IM B34 IM 2101	IM V17 IM 2111	IM 2131	IM 2151	IM 2161	IM 2171	J = foot/flange-mounted, small flange
Foot-mounted motor, shaft with free extensions	IM 1002	IM 1012	IM 1032	IM 1052	IM 1062	IM 1072	

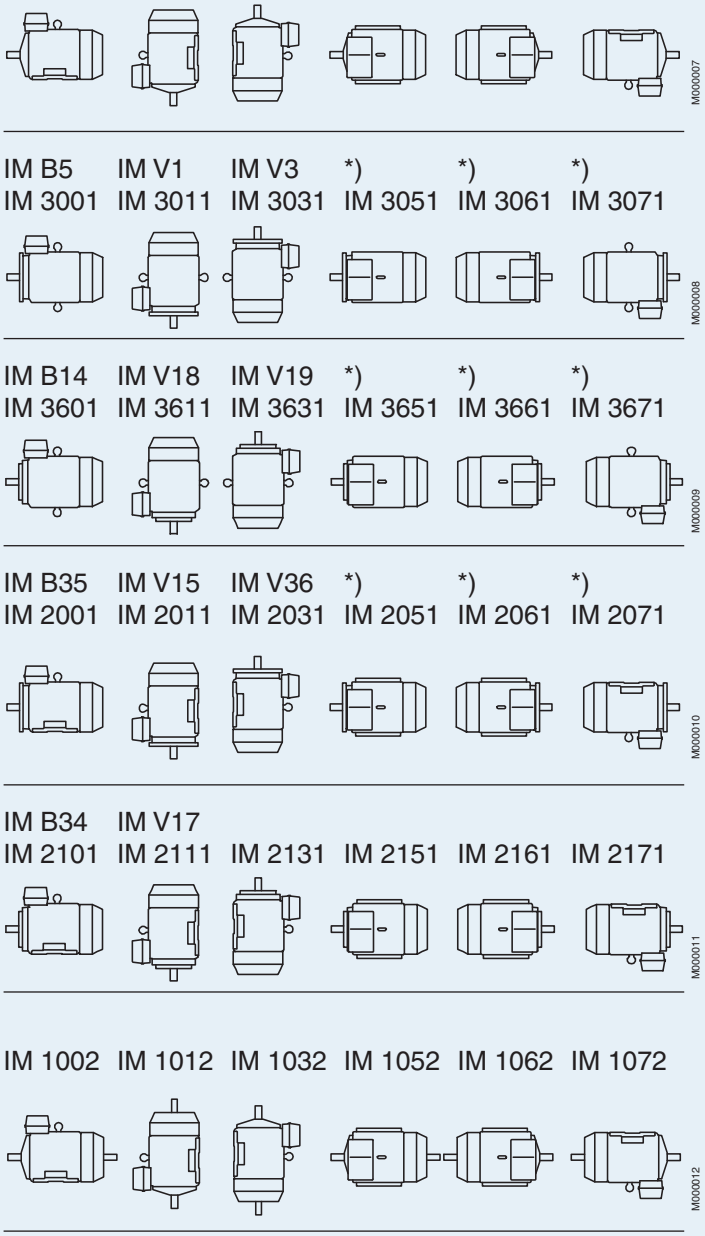

*) Not stated in IEC 60034-7.

Note: In case of motors mounted with the shaft upwards and water or liquid are expected to go down along the shaft, the user must take into account to mount some means capable to preventing it.

Voltage and frequency

The table values for output, speed, efficiency, power factor, starting torque and starting current apply at the rated voltage and frequency. These values will be affected if the supply voltage or frequency deviate from the rated values.

The motors can operate continuously at the rated output, with a long-term voltage deviation of 5 % from the specified value or range of values, and at the rated frequency without exceeding the temperature class stamped on the rating plate. The temperature rise of the winding may increase by 10 K, but without exceeding the insulation temperature class stamped on the rating plate. Voltage deviations of up to 10 % are permissible for short periods only.

Protection against corrosion

Special attention has been paid to the finish of ABB's motors. All parts are treated by the method most appropriate to each material, giving reliable anti-corrosion protection under severe environmental conditions.

The color is blue, Munsel color code: 8B, 4.5/3.25 (NCS4822-B05G the closest shade in other standards). Specific details of paint types are available on request.

2

Drain holes

Non-sparking, increased safety and dust ignition proof motors are fitted with drain holes and plugs according to the table below.

Flameproof motors are not as standard fitted with drain holes, but can be on request, see variant codes.

Type of protection	Frame material	Frame size	Drain holes
Non-sparking, increased safety	Aluminum	90-280	closed
	Cast iron	71-132	optional
		160-450	open
Flameproof	Cast iron	80-400	not included
		160-400	optional
Dust ignition proof, 2D and 3D, sizes 71-80	Aluminum	71-80	open
Dust ignition proof, 2D, 3D sizes 90-100	Aluminum	90-280	not included
Dust ignition proof, 3D, IP 55	Aluminum	112-280	closed
Dust ignition proof, category 2D, IP 65	Cast iron	80-400	not included
Dust ignition proof, category 3D, IP 65	Cast iron	80-132	optional
		160-400	closed

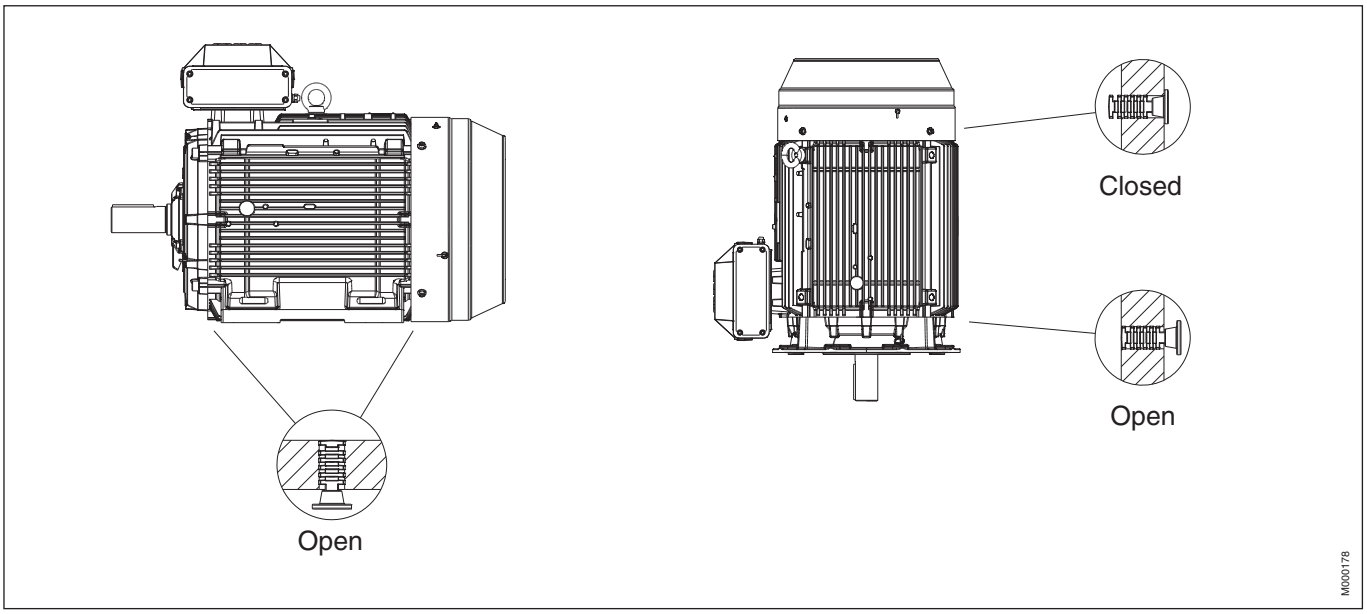

Bearings

ABB policy is to have reliability as a vital issue in bearing design as well as in bearing lubrication systems. That is why we, as standard, follow the L1 -principle (meaning that 99 per cent of the bearings achieve or exceed the calculated grease lifetime). The lubrication intervals can also be calculated according to L10 -principle which means that 90 per cent of the motors are sure to make the interval time. L10 -values, which are normally doubled compare to L1 -values, are available from ABB at request.

Motors with permanently greased bearings

Cast iron motors up to frame size 132 and aluminum motors up to frame size 180 and M2AA 200 are normally fitted with permanently greased bearings of type Z or 2Z. The exception is 2D DIP motors with aluminum frame sizes 90-280, which are fitted with 2RS bearings because higher protection is required.

Guidelines for bearing life time acc. to L1 principle:

Aluminum motors
- 2 and 2/4 pole motors, 10 000 - 20 000 duty hours [1)]
- 4 to 8 pole motors, 20 000 - 40 000 duty hours [1)]

Cast iron motors
- 2 and 2/4 pole motors, 20 000 duty hours [1)]
- 4 to 8 pole motors, 40 000 duty hours [1)]

[1)] depending on application and load conditions.

Motors fitted with grease nipples

Cast iron motors from frame size 160 and aluminum motors from frame size 200, except M2AA 200, and above (DIP motors with aluminum frame excluded), are as standard fitted with regreasable bearings.

Lubricate the motor when operating.

For motors with lubrication systems we recommend not to exceed lubrication interval of two years in any case.

2

Lubrication

Lubricate the motor when operational. If a grease outlet plug is fitted, temporarily remove when lubricating, or permanently with auto lubrication. If the motor is fitted with a lubrication plate, use values given, or use the values given in the table beside. These values are according to L1 -principle, which is the ABB standard for all motors.

The effectiveness of the motor lubrication should be checked by measuring the surface temperature of bearing endshields during normal operating conditions. If the measured temperature is +80°C or above, the relubrication intervals must be shortened; i.e. the relubrication interval should be halved for every 15K increase in bearing temperature. If this is not possible ABB recommends the use of lubricants suitable for high operating temperature conditions. These lubricants allow a normal relubrication interval and 15K increase in bearing temperature conditions.

Formula to change the L1 values roughly to L10 values:

$$L10 = 2.7 \times L1$$

Lubrication intervals acc. to L1 principle

Ball bearings: lubrication intervals in duty hours

Frame size	Amount of grease g	3600 r/min	3000 r/min	1800 r/min	1500 r/min	1000 r/min	500-750 r/min
112	10	10000	13000	18000	21000	25000	28000
132	15	9000	11000	17000	19000	23000	26500
160	25	7000	9500	14000	17000	21000	24000
180	30	6000	8000	13500	16000	20000	23000
200	40	4000	6000	11000	13000	17000	21000
225	50	3000	5000	10000	12500	16500	20000
250	60	2500	4000	9000	11500	15000	18000
280	35	2000	3500	–	–	–	–
280	70	–	–	8000	10500	14000	17000
315	35	2000	3500	–	–	–	–
315	90	–	–	6500	8500	12500	16000
355	35	1200	2000	–	–	–	–
355	120	–	–	4200	6000	10000	13000
400	40	1000	1600	–	–	–	–
400	130	–	–	2800	4000	8400	12000
450	40	1000	1600	–	–	–	–
450	140	–	–	2400	4000	8000	8800

Roller bearings: lubrication intervals in duty hour

Frame size	Amount of grease g	3600 r/min	3000 r/min	1800 r/min	1500 r/min	1000 r/min	500-750 r/min
160	25	3500	4500	7000	8500	10500	12000
180	30	3000	4000	7000	8000	10000	11500
200	40	2000	3000	5500	6500	8500	10500
225	50	1500	2500	5000	6000	8000	10000
250	60	1300	2200	4500	5700	7500	9000
280	35	1000	1800	–	–	–	–
280	70	1000	2000	4000	5300	7000	8500
315	35	1000	1800	–	–	–	–
315	90	–	–	3000	4300	6000	8000
355	35	600	1000	–	–	–	–
355	120	–	–	2000	3000	5000	6500
400	40	500	800	–	–	–	–
400	130	–	–	1400	2300	4200	6000
450	40	500	800	–	–	–	–
450	140	–	–	1200	2000	4000	4400

Standard bearing types

The motors are normally fitted with single-row deep groove ball bearings as listed in the table below.

For special bearings, please see the variant codes.

Motor size	Poles	Flameproof motors		Increased safety motors		Process performance Non-sparking motors		General purpose Non-sparking motors		Dust ignition protection	
		Bearing D-end	Bearing N-end	Bearing D-end	Bearing N-end	Bearing D-end	Bearing N-end	Bearing D-end	Bearing N-end	Bearing D-end	Bearing N-end
Cast iron motors											
71	2-8							6202 WC3	6202 WC3		
80	2-8	6205-2Z/C3	6204-2Z/C3	6205-2Z/C3	6204-2Z/C3	6205-2Z/C3	6204-2Z/C3	6204 DDUC3	6204 DDUC3	6205-2Z/C3	6204-2Z/C3
90	2-8	6205-2Z/C3	6205-2Z/C3	6205-2Z/C3	6205-2Z/C3	6205-2Z/C3	6205-2Z/C3	6205 DDUC3	6205 DDUC3	6205-2Z/C3	6205-2Z/C3
100	2-8	6206-2Z/C3	6206-2Z/C3	6206-2Z/C3	6206-2Z/C3	6206-2Z/C3	6206-2Z/C3	6206 DDUC3	6206 DDUC3	6206-2Z/C3	6206-2Z/C3
112	2-8	6206-2Z/C3	6206-2Z/C3	6206-2Z/C3	6206-2Z/C3	6206-2Z/C3	6206-2Z/C3	6207 DDUC3	6206 DDUC3	6206-2Z/C3	6206-2Z/C3
132	2-8	6208-2Z/C3	6208-2Z/C3	6208-2Z/C3	6208-2Z/C3	6208-2Z/C3	6208-2Z/C3	6208 DDUC3	6207 DDUC3	6208-2Z/C3	6208-2Z/C3
160	2	6309M/C3	6309M/C3	6309/C3	6309/C3	6309/C3	6309/C3	6309/C3	6209/C3	6309M/C3	6309M/C3
	4-8	6309/C3	6309/C3	6309/C3	6309/C3	6309/C3	6309/C3	6309/C3	6209/C3	6309/C3	6309/C3
180	2	6310M/C3	6309M/C3	6310/C3	6309/C3	6310/C3	6309/C3	6310/C3	6210/C3	6310M/C3	6309M/C3
	4-8	6310/C3	6309/C3	6310/C3	6309/C3	6310/C3	6309/C3	6310/C3	6210/C3	6310/C3	6309/C3
200	2	6312M/C3	6310M/C3	6312/C3	6310/C3	6312/C3	6310/C3	6312/C3	6212/C3	6312M/C3	6310M/C3
	4-8	6312/C3	6310/C3	6312/C3	6310/C3	6312/C3	6310/C3	6312/C3	6212/C3	6312/C3	6310/C3
225	2	6313M/C3	6312M/C3	6313/C3	6312/C3	6313/C3	6312/C3	6313/C3	6213/C3	6313M/C3	6312M/C3
	4-8	6313/C3	6312/C3	6313/C3	6312/C3	6313/C3	6312/C3	6313/C3	6213/C3	6313/C3	6312/C3
250	2	6315M/C3	6313M/C3	6315/C3	6313/C3	6315/C3	6313/C3	6314/C3	6214/C3	6315M/C3	6313M/C3
	4-8	6315/C3	6313/C3	6315/C3	6313/C3	6315/C3	6313/C3	6314/C3	6214/C3	6315/C3	6313/C3
280	2	6316/C3	6316/C3	6316/C3	6316/C3	6316/C3	6316/C3			6316/C3	6316/C3
	4-8	6316/C3	6316/C3	6316/C3	6316/C3	6316/C3	6316/C3			6316/C3	6316/C3
315	2	6316/C3	6316/C3	6316/C3	6316/C3	6316/C3	6316/C3			6316/C3	6316/C3
	4-8	6319/C3	6316/C3	6319/C3	6316/C3	6319/C3	6316/C3			6319/C3	6316/C3
355	2	6316M/C3	6316M/C3	6316M/C3	6316M/C3	6316M/C3	6316M/C3			6316M/C3	6316M/C3
	4-8	6322/C3	6316/C3	6322/C3	6316/C3	6322/C3	6316/C3			6322/C3	6316/C3
400	2	6317M/C3	6317M/C3	6317M/C3	6317M/C3	6317M/C3	6317M/C3			6317M/C3	6317M/C3
	4-8	6324/C3	6319/C3	6324/C3	6319/C3	6324/C3	6319/C3			6324/C3	6319/C3
450	2					6317M/C3	6317M/C3				
	4-8					6326M/C3	6322/C3				

[1] Dust ignition proof motors sizes 71-132: Same bearing sizes as by General purpose Non-sparking motors

Motor size	Poles	Increased safety motors		Non-sparking motors		Dust ignition protection Category 2 D		Category 3 D	
		Bearing D-end	Bearing N-end	Bearing D-end	Bearing N-end	Bearing D-end	Bearing N-end	Bearing D-end	Bearing N-end
Aluminum motors									
71		–	–	–	–	6203-2Z/C3	6202-2Z/C3	6203-2Z/C3	6202-2Z/C3
80		–	–	–	–	6204-2Z/C3	6203-2Z/C3	6204-2Z/C3	6203-2Z/C3
90	2-8	6205-2Z/C3	6204-2Z/C3	6205-2Z/C3	6204-2Z/C3	6205-2RS/C3	6204-2RS/C3	6205-2RS/C3	6204-2RS/C3
100	2-8	6306-2Z/C3	6205-2Z/C3	6306-2Z/C3	6205-2Z/C3	6306-2RS/C3	6205-2RS/C3	6306-2RS/C3	6205-2RS/C3
112	2-8	6206-2Z/C3	6205-2Z/C3	6206-2Z/C3[1]	6205-2Z/C3[1]	6206-2RS/C3	6205-2RS/C3	6206-2Z/C3[1]	6205-2Z/C3[1]
				6206-2Z/C3[2]	6206-2Z/C3[2]			6206-2Z/C3[2]	6206-2Z/C3[2]
132	2-8	6208-2Z/C3	6206-2Z/C3	6208-2Z/C3[1]	6206-2Z/C3[1]	6208-2RS/C3	6206-2RS/C3	6208-2Z/C3[1]	6206-2Z/C3[1]
				6208-2Z/C3[2]	6208-2Z/C3[2]			6208-2Z/C3[2]	6208-2Z/C3[2]
160	2-8	6309-2Z/C3	6209-2Z/C3	6309-2Z/C3	6209-2Z/C3	6309-2RS/C3	6209-2RS/C3	6309-2Z/C3	6209-2Z/C3
180	2-8	6310-2Z/C3	6209-2Z/C3	6310-2Z/C3	6209-2Z/C3	6310-2RS/C3	6209-2RS/C3	6310-2Z/C3	6209-2Z/C3
200	2-8	6312-2Z/C3	6210-2Z/C3	6312/C3	6210/C3	6312-2RS/C3	6210-2RS/C3	6312/C3	6210/C3
				6312-2Z/C3[3]	6209-2Z/C3[3]			6312-2Z/C3[3]	6209-2Z/C3[3]
225	2-8	6313-2Z/C3	6212-2Z/C3	6313/C3	6212/C3	6313-2RS/C3	6212-2RS/C3	6313/C3	6212/C3
				6313/C3[3]	6210/C3[3]			6313/C3[3]	6210/C3[3]
250	2-8	6315-2ZC3	6213-2Z/C3	6315/C3	6213/C3	6315-2RS/C3	6213-2RS/C3	6315/C3	6213/C3
				6315/C3[3]	6212/C3[3]			6315/C3[3]	6212/C3[3]
280	2	6315-2Z/C3	6213-2Z/C3	6315/C3	6213/C3	6315-2RS/C3	6213-2RS/C3	6315/C3	6213/C3
	4-8	6316-2Z/C3	6213-2Z/C3	6316/C3	6213/C3	6316-2RS/C3	6213-2RS/C3	6316/C3	6213/C3

[1] M2AA 112: M 2, M 4. M2AA 132: SA 2, SB 2, S 4, M 4. M3AA 112: M 6, M 8. M3AA 132: SA 2, S 4, S 6, M2 6, MB 6, S 8, M 8
[2] remaining versions
[3] M2AA

Transport locking

Motors with roller bearings or an angular contact ball bearing are fitted with a transport lock before despatch to prevent damage to the bearings during transport. When the transport lock is fitted, the motor is provided with a warning sign.

Locking may also be fitted in other cases where the transport handling could be damaging.

Axially-locked bearings

The table shows which motors are axially locked in the bearing seat, by an inner bearing cover.

See also variant code 042.

Aluminum motors

Motor size	Foot-mounted motors	Flange-mounted motors Large flange	Small flange
71-80	On request at D-end	On request at D-end	
90-100	D-end [1)]	D-end [1)]	D-end [1)]
112-132	D-end [1)]	D-end	D-end
160-250	D-end	D-end	

[1)] A spring washer at the N-end locatess the rotor at the D-end. DIP motors locked at D-end.

Cast iron motors

Motor size	Foot-mounted motors	Flange-mounted motors
Non-sparking and Increased safety motors:		
80-450	D-end	D-end
Flameproof motors:		
80-400	D-end	D-end

2

Permissible loadings on the shaft end

The following tables give the permissible radial and axial forces in Newton, assuming only radial or axial force is applied. Permissible loads of simultaneous radial and axial forces will be supplied on request.

The bearing life, L10, is calculated according to ISO 281:1990/Amd 2:2000 standard theory, which also takes the purity of the grease into consideration. An adequate lubrication is a necessary prerequisite for the table below.

The values are based on normal conditions at 50 Hz. At 60 Hz the values must be reduced by 10 %. For two-speed motors, the values must be based on the higher speed.

Motors are foot-mounted IM B3 version with force directed sideways. In some cases the strength of the shaft affects the permissible forces.

If flameproof motors Ex d or Ex de sizes 160 and above are subject to high radial forces (e.g. belt drive) they should be fitted with roller bearings. Permissible radial forces for IIB and IIC are available from ABB on request.

Please note that motors type Ex d or Ex de IIB and IIC in size 250 and above with roller bearings may require detailed information about power transmission; please consult ABB.

If the radial force is applied between points X_0 and X_{max}, the permissible force F_R can be calculated from the following formula:

$$F_R = F_{X0} - \frac{X}{E} (F_{X0} - F_{Xmax})$$

E = length of shaft extension in basic version

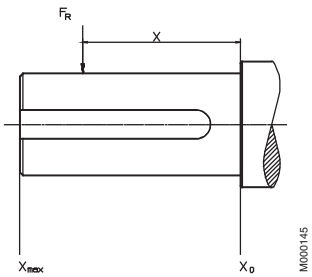

Aluminum motors, sizes 71 to 180
Permissible radial forces

Motor size	No. of poles	Length of shaft extention E (mm)	Ball bearings								Roller bearings			
			Basic design with deep groove ball bearings				Alternative design with 63-series bearings				Alternative design with roller bearings			
			25,000 hours		40,000 hours		25,000 hours		40,000 hours		25,000 hours		40,000 hours	
			FX_0(N)	FX_{max}(N)	FX_0(N)	FX_{max}(N)	FX_0(N)	FX_{max}(N)	FX_0(N)	FX_{max}(N)	FX_0(N)	FX_{max}(N)	FX_0(N)	FX_{max}(N)
71	2-8	30	680	570	680	570								
80	2-8	40	930	750	930	750								
90	2-8	50	1010	810	1010	810								
100	2-8	60	2280	1800	2280	1800								
112 M	2	60	1800	1420	1620	1280	2160	1700	2160	1700				
	4	60	1790	1410	1590	1250	2160	1700	2160	1700				
	6	60	1910	1510	1700	1340	2160	1700	2160	1700				
	8	60	1940	1530	1720	1360	2160	1700	2160	1700				
112 MB	2	60	1820	1470	1640	1330	2100	1700	2100	1700				
	4	60	1770	1430	1560	1260	2100	1700	2100	1700				
	6	60	1880	1520	1650	1340	2100	1700	2100	1700				
	8	60	1930	1560	1690	1370	1700	2100	1700	2100				
132 SA	2	80	3020	2360	2740	2140	4070	3180	3670	2870				
132 SB	2	80	3020	2360	2730	2130	4060	3170	3670	2870				
132 SC	2	80	3030	2430	2750	2200	3990	3200	3690	2960				
132 S	4	80	3120	2440	2790	2180	4090	3200	3830	2990				
132 M	4	80	3080	2410	2750	2150	4100	3200	3780	2950				
132 MB	4	80	3050	2440	2710	2170	3990	3200	3740	3000				
132 S	6	80	3280	2560	2910	2270	4100	3200	3990	3120				
132 MA	6	80	3240	2530	2880	2250	4100	3200	3970	3100				
132 MB	6	80	3200	2500	2840	2220	4100	3200	3930	3070				
132 MC	6	80	3010	2510	2660	2220	3840	3200	3700	3090				
132 S	8	80	3370	2630	2980	2330	4100	3200	4100	3200				
132 M	8	80	3310	2590	2940	2300	4100	3200	4060	3170				
132 MB	8	80	3280	2630	2910	2330	3990	3200	3990	3200				
160 MA	2	110	4470	3500	4470	3500					4470	3500	4470	3500
	8	110	4470	3500	4470	3500					4470	3500	4470	3500
160 M	2	110	4470	3500	4470	3500					4470	3500	4470	3500
	4	110	4470	3500	4470	3500					4470	3500	4470	3500
	6	110	4470	3500	4470	3500					4470	3500	4470	3500
	8	110	4470	3500	4470	3500					4470	3500	4470	3500
160 L	8	110	4470	3500	4470	3500					4470	3500	4470	3500
	4	110	4470	3500	4470	3500					4470	3500	4470	3500
	6	110	4470	3500	4470	3500					4470	3500	4470	3500
	8	110	4380	3500	4380	3500					4380	3500	4380	3500
160 LB	2	110	4470	3500	4470	3500					4470	3500	4470	3500
	4	110	4470	3500	4470	3500					4470	3500	4470	3500
	6	110	4380	3500	4380	3500					4380	3500	4380	3500
	8	110	4380	3500	4380	3500					4380	3500	4380	3500
180 M	2	110	6900	5550	6360	5110					7338	5900	7340	590
	4	110	7100	5710	6470	5200					7338	5900	7340	5900

Aluminum motors, sizes 180 to 280
Permissible radial forces

Motor size	No. of poles	Length of shaft extent extention	Ball bearings Basic design with deep groove ball bearings 25,000 hours FX_0(N)	FX_{max}(N)	40,000 hours FX_0(N)	FX_{max}(N)	Roller bearings Alternative design with roller bearings 25,000 hours FX_0(N)	FX_{max}(N)	40,000 hours FX_0(N)	FX_{max}(N)
180 L	4	110	7050	5670	6410	5150	7340	5900	7340	5900
	6	110	7340	5900	6840	5500	7340	5900	7340	5900
	8	110	7340	5900	6930	5570	7340	5900	7340	5900
180 LB	2	110	6900	5550	6360	5110	7340	5900	7340	5900
	4	110	6990	5670	6350	5150	7280	5900	7280	5900
	6	110	7280	5900	6780	5500	7280	5900	7280	5900
	8	110	7280	5900	6870	5570	7280	5900	7280	5900
M2AA 200	2	110	7000	5800	6300	5200	9100	7500	8100	6700
	4	110	6700	5500	5900	4900	9500	7800	8600	7100
M3AA 200 MLA	2	110	4940	4070	4370	3600	9460	7790	9460	7790
	4	110	5360	4410	4690	3860	9460	7790	9460	7790
	6	110	5590	4600	4850	3990	9460	7790	9460	7790
	8	110	5680	4680	4910	4040	9460	7790	9460	7790
M3AA 200 MLB	2	110	4930	4060	4360	3590	9460	7790	9460	7790
	4	110	5290	4360	4630	3810	9460	7790	9460	7790
	6	110	5510	4540	4780	3940	9460	7790	9460	7790
	8	110	5670	4670	4890	4030	9460	7790	9460	7790
M3AA 200 MLC	2	110	4920	4050	4360	3590	9460	7790	9460	7790
	6	110	5380	4430	4640	3820	9460	7790	9460	7790
225 SMA	4	110	5830	4930	5100	4320	9810	8300	9810	8300
	8	140	6400	5420	5550	4700	9810	8300	9810	8300
225 SMB	2	140	5400	4530	4780	4010	10600	8900	10600	8900
	4	140	5750	4870	5030	4260	9810	8300	9810	8300
	6	140	6000	5080	5200	4400	9810	8300	9810	8300
	8	140	6320	5350	5470	4630	9810	8300	9810	8300
225 SMC	2	110	5370	4510	4750	3990	10600	8900	10600	8900
	4	140	5720	4840	5000	4230	9810	8300	9810	8300
	6	140	5930	5020	5130	4340	9810	8300	9810	8300
	8	140	6180	5230	5320	4500	9810	8300	9810	8300
250 SMA	2	140	6970	5620	6180	4980	11290	9100	11290	9100
	4	140	7693	6200	6750	5440	14330	11550	14330	11550
	6	140	7678	6430	6940	5590	14330	11550	14330	11550
	8	140	8250	6650	7150	5760	14330	11500	14330	11550
250 SMB	2	140	6960	5610	6150	4960	11290	9100	11290	9100
	4	140	7620	6140	6680	5380	14330	11550	14330	11550
	6	140	7940	6400	6900	5560	14330	11550	14330	11550
	8	140	8180	6590	7070	5700	14330	11550	14330	11550
280 SMA	2	140	6650	5400	5850	4750	15260	12400	13790	11200
	4	140	7750	6300	6890	5600	18460	15000	16560	13450
	6	140	8810	7100	7760	6250	21090	17000	18860	15200
	8	140	9000	7250	7880	6350	21840	17600	19360	15600
280 SMB	2	140	6460	5250	5720	4650	15260	12400	13790	11200
	4	140	7510	6100	6590	5350	17850	14500	16060	13050

Cast iron motors, sizes 71 to 132
Permissible radial forces

Non-sparking, Increased safety, dust ignition proof

Motor size	Poles	Length of shaft extention E (mm)	Ball bearings 20,000 hours FX_0 (N)	FX_{max}(N)
71	2	30	415	335
	4	30	415	335
	6	30	415	340
80	2	40	670	545
	4	40	890	725
	6	40	970	830
90 S	2	50	795	625
	4	50	995	780
	6	50	1135	880
90 L	2	50	780	635
	4	50	985	790
	6	50	1120	905
100	2	60	1090	875
	4	60	1360	1095
	6	60	1560	1250
112	2	60	1410	1120
	4	60	1735	1400
	6	60	2000	1620
132 S	2	80	1700	1330
	4	80	2130	1660
	6	80	2495	1935
132 M	2	80	1675	1345
	4	80	2130	1675
	6	80	2450	1960

Flameproof

Motor size	Poles	Length of shaft extention E (mm)	Ball bearings 20,000 hours FX_0 (N)	FX_{max}(N)
80	2	40	650	520
	4	40	830	680
	6	40	900	730
	8	40	900	730
90	2	50	720	575
	4	50	910	780
	6	50	1025	820
	8	50	1025	820
100, 112	2	60	1090	860
	4	60	1280	1025
	6	60	1460	1155
	6	60	1460	1155
132	2	80	1700	1380
	4	80	2020	1610
	6	80	2270	1805
	8	80	2270	1805

Cast iron motors, sizes 160 to 450
Permissible radial forces

Increased safety, non-sparking and dust ignition proof motors

Motor size	Poles	Length of shaft extension E(mm)	Ball bearings				Roller bearings			
			20,000 hours		40,000 hours		20,000 hours		40,000 hours	
			FX_0(N)	FX_{max}(N)	FX_0(N)	FX_{max}(N)	FX0(N)	FX_{max}(N)	FX_0(N)	FX_{max}(N)
160	2	110	3100	2100	2450	2000	7750	2100	6300	2100
	4	110	3900	2100	3100	2100	8800	2100	7750	2100
	6	110	4500	2100	3550	2100	8800	2100	8750	2100
	8	110	4950	2100	3900	2100	8800	2100	8750	2100
180	2	110	3550	2900	2800	2300	8350	3050	6800	3050
	4	110	4500	3050	3550	2900	9900	3050	8350	3050
	6	110	5150	3050	4100	3050	9900	3050	9450	3050
	8	110	5650	3050	4500	3050	9900	3050	9900	3050
200 ML_	2	110	4800	3950	3800	3150	11700	4550	9500	4550
	4	110	6050	4550	4800	3950	14400	4550	11700	4550
	6	110	6950	4550	5500	4550	16250	4550	13200	4550
	8	110	7650	4550	6050	4550	17700	4550	14400	4550
225 SM_	2	110	5450	4500	4350	3550	14300	4550	11650	4550
	4	140	6900	4650	5450	4400	17650	4650	14300	4550
	6	140	7900	4650	6250	4650	19900	4650	16200	4650
	8	140	8700	4650	6900	4650	21700	4650	17650	4650
250 SM_	2	140	6750	4100	5350	4100	18950	4100	15400	4100
	4	140	8550	5800	6750	5450	23350	5800	18950	5800
	6	140	9800	5800	7750	5800	26400	5800	21400	5800
	8	140	10750	5800	8550	5800	28750	5800	23350	5800
280 SM_	2	140	7300	6000	5800	4900	20400	6000	16500	6000
	4	140	9200	7800	7300	6200	25100	9200	20300	9200
	6	140	10600	8900	8400	7000	28300	9200	23000	9200
	8	140	11700	9200	9200	7800	30900	9200	25100	9200
315 SM_	2	140	7300	6000	5800	4950	20300	6000	16500	6000
	4	170	11400	9400	9000	7450	32500	9600	26600	9600
	6	170	13000	9600	10300	8500	37000	9600	30000	9600
	8	170	14400	9600	11400	9400	40300	9600	32700	9600
315 ML_	2	140	7400	6400	5850	5050	20600	5850	16700	5850
	4	170	11500	9700	9100	7650	32700	13600	26500	13600
	6	170	13200	11100	10400	8800	36900	13600	29900	13600
	8	170	14500	12200	11500	9700	40200	13600	32600	13600
315 LK_	2	140	7400	6550	5800	5150	20800	5550	16800	5550
	4	170	11500	10000	9100	7850	33100	13350	26800	13350
	6	170	13200	11400	10450	9050	37300	13350	30300	13350
	8	170	14600	12600	11550	10000	40800	13350	33100	13350
355 SM_	2	140	7350	6450	5750	5050	20600	7200	16700	7200
	4	210	15200	12600	12000	9950	45500	14000	36900	14000
	6	210	17500	14000	13800	11400	51400	14000	41700	14000
	8	210	19300	14000	15250	12600	56000	14000	45500	14000
355 ML_	2	140	7350	6550	5750	5100	20800	6750	16800	6750
	4	210	15300	12900	12000	10100	45900	13600	37200	13600
	6	210	17600	13600	13900	11600	51500	13600	42100	13600
	8	210	19400	13600	15300	12900	56000	13600	45900	13600
355 LK_	2	140	7350	6650	5650	5150	21000	6750	17000	6750
	4	210	15200	13000	11850	10200	46000	13000	37300	13000
	6	210	17500	13000	13700	11900	52000	13000	42000	13000
	8	210	19400	13000	15200	13000	56500	13000	46000	13000
400 LK_	2	170	7650	6850	4400	3900	23900	9050	19350	9050
	4	210	15600	11500	12150	10550	52500	11500	43300	11500
	6	210	17800	11500	13850	11500	60000	11500	48800	11500
	8	210	19700	11500	15350	11500	65700	11500	53200	11500
400 L_	2	170	7650	6850	4400	3900	23900	9050	19350	9050
	4	210	15600	13550	12150	10550	52500	16000	43300	16000
	6	210	17800	15450	13850	12000	60000	16000	48800	16000
	8	210	19700	16000	15350	13350	65700	16000	53200	16000
450 L_	2	170	7400	6700	3500	3300	24000	7500	19000	7500
	4	210	17000	15200	13000	11600	62000	25000	50000	25000
	6	210	1900	17000	14000	13000	70000	24000	56000	24000
	8	210	21300	19000	16500	14600	76000	23000	62000	23000

2

Cast iron motors
Permissible radial forces

Flameproof motors Ex d, Ex de IIB/IIC, motor sizes 160 - 250

Motor size	Poles	Length of shaft extension E (mm)	Ball bearings IIB [2] 20,000 hours		Ball bearings IIB/IIC 20,000 hours		Roller bearings IIB [2] 20,000 hours		Roller bearings IIB/IIC 20,000 hours	
			FX_0 (N)	FX_{max} (N)	FX_0 (N)	FX_{max} (N)	FX_0 (N)	FX_{max} (N)	FX_0 (N)	FX_{max} (N)
160	2	110	3020	1900	3020	1900	7600	2900	6700	1600
	4	110	3780	1900	3780	1900	7600	2900	6700	1600
	6	110	4360	1900	4360	1900	7600	2900	6700	1600
	8	110	4810	1900	4810	1900	7600	2900	6700	1600
180	2	110	3420	2780	3420	2780	8200	4000	7500	2400
	4	110	4260	2800	4260	2800	9000	4000	7500	2400
	6	110	4910	2800	4910	2800	9000	4000	7500	2400
	8	110	5440	2800	5440	2800	9000	4000	7500	2400
200 ML_	2	110	4580	3780	4580	3780	[1]	[1]	11460	4200
	4	110	5770	4750	5770	4750	[1]	[1]	14100	4200
	6	110	6590	5000	6590	5000	[1]	[1]	15000	4200
	8	110	7000	5000	7000	5000	[1]	[1]	15000	4200
225 SM_	2	110	5170	3700	5170	3700	14000	7000	9300	3000
	4	140	6520	2800	6520	2800	17300	7200	9300	2200
	6	140	7000	2800	7000	2800	17300	7200	9300	2200
	8	140	7000	2800	7000	2800	17300	7200	9300	2200
250 SM_	2	140	6400	5170	3200	2900	18200	6700	[1]	[1]
	4	140	8070	6510	3000	2800	21000	9200	[1]	[1]
	6	140	9170	7400	3000	2800	21000	9200	[1]	[1]
	8	140	10160	8200	3000	2800	21000	9200	[1]	[1]

[1] On request
[2] IIB on request, requires special construction

Flameproof motors Ex d, Ex de IIB - sizes 280-355

Motors size	Poles	Length of shaft extention E (mm)	Ball bearings 20,000 hours		Roller bearings 20,000 hours	
			FX_0 (N)	FX_{max} (N)	FX_0 (N)	FX_{max} (N)
280 SM_	2	140	7300	6000	20400	6000
	4	140	9200	7800	25100	9200
	6	140	10600	8900	28300	9200
	6	140	11700	9200	30900	9200
315 SM_	2	140	7300	6000	20300	6000
	4	170	11400	9400	32500	9600
	6	170	13000	9600	37000	9600
	8	170	14400	9600	40000	9600
315 ML_	2	140	7400	5850	20600	5850
	4	170	11500	9700	32700	13500
	6	170	13200	11100	36900	13500
	8	170	14500	12200	40200	13500
355 SM_	2	170	6000	5300	Not available	
	4-8	170	13100	10900	Not available	
355 ML_	2	170	5800	5200	Not available	
	4-8	170	12900	10900	Not available	
355 LK_	2	170	5500	5000	Not available	
	4-8	170	12500	10800	Not available	

Values for sizes 400 available on request.

Flameproof motors Ex d, Ex de IIC - sizes 280-315

Only allowed for direct coupling applications.

Permissible axial forces

The following tables give the permissible axial forces in Newton, assuming zero radial force. The values are based on normal conditions at 50 Hz with standard bearings and calculated bearing lives of 20,000 and 40,000 hours.

At 60 Hz the values are to be reduced by 10%.

For two-speed motors, the values are to be based on the higher speed. The permissible loads of simultaneous radial and axial forces will be supplied on request.

Given axial forces F_{AD}, assumes D-bearing locked by means of locking ring. Without locking ring the F_{AD} forces should be reduced to 70% of list value.

Aluminum motors, motor sizes 71 - 280

Mounting arrangement IM B3

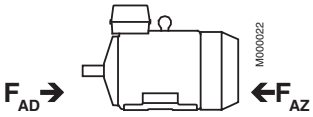

Motor size	20,000 hours								40,000 hours							
	2-pole		4-pole		6-pole		8-pole		2-pole		4-pole		6-pole		8-pole	
	F_{AD} N	F_{AZ} N	F_{AD} N	F_{AZ} N	F_{AD} N	F_{AZ} N	F_{AD} N	F_{AZ} N	F_{AD} N	F_{AZ} N	F_{AD} N	F_{AZ} N	F_{AD} N	F_{AZ} N	F_{AD} N	F_{AZ} N
71	985	485	1070	570	1135	635	1130	630	900	400	970	470	1020	520	1015	515
80	1305	705	1420	820	1505	905	1540	940	1185	585	1285	685	1350	750	1375	775
90	1360	930	1490	1070	1590	1165	1635	1210	1225	800	1335	915	1415	990	1450	1025
100	2805	1945	3075	2215	3260	2400	3355	2495	2540	1680	2760	1900	2910	2050	2985	2125
112 M	1500	1500	1600	1600	1730	1730	1750	1750	1320	1320	1390	1390	1500	1500	1510	1510
112 MB	1530	1530	1600	1600	1720	1720	1760	1760	1340	1340	1390	1390	1490	1490	1520	1520
132 SA	2570	2570	-	-	-	-	-	-	2260	2260	-	-	-	-	-	-
132 SB	2570	2570	-	-	-	-	-	-	2260	2260	-	-	-	-	-	-
132 SC	2520	2520	-	-	-	-	-	-	2210	2210	-	-	-	-	-	-
132 S	-	-	2770	2770	2950	2950	3040	3040	-	-	2440	2440	2580	2580	2650	2650
132 M	-	-	2750	2750	-	-	3020	3020	-	-	2420	2420	-	-	2630	2630
132 MA	-	-	-	-	2940	2940	-	-	-	-	-	-	2570	2570	-	-
132 MB	-	-	2680	2680	2910	2910	2940	2940	-	-	2340	2340	2550	2550	2560	2560
132 MC	-	-	-	-	2830	2830	-	-	-	-	-	-	2460	2460	-	-
160 MA	4730	4730	-	-	-	-	5240	5240	4220	4220	-	-	-	-	4640	4640
160 M	4730	4730	5230	5230	5220	5220	5220	5220	4220	4220	4640	4640	4630	4630	4630	4630
160 L	5240	5240	5220	5220	5050	5050	4720	4720	4650	4650	4630	4630	4470	4470	4740	4740
160 LB	5240	5240	5050	5050	4720	4720	4720	4720	4650	4650	4470	4470	4740	4740	4740	4740
180 M	4660	4660	4950	4950	-	-	-	-	4250	4250	4500	4500	-	-	-	-
180 LB	4660	4660	4870	4870	5200	5200	5370	5370	4250	4250	4390	4390	4710	4710	4850	4850
200 MLA	3050	3050	3850	3850	4400	4400	4850	4850	2430	2430	3050	3050	3500	3500	3850	3850
200 MLB	3050	3050	3850	3850	4400	4400	4850	4850	2430	2430	3050	3050	3500	3500	3850	3850
200 MLC	3050	3050	-	-	4400	4400	-	-	2430	2430	-	-	3500	3500	-	-
225 SMA	-	-	4340	4340	-	-	5460	5460	-	-	3440	3440	-	-	4340	4340
225 SMB	3440	3440	4340	4340	4960	4960	5460	5460	2730	2730	3440	3440	3940	3940	4340	4340
250 SMA	4180	4180	5260	5260	6020	6020	6630	6630	3320	3320	4180	4180	4780	4780	5260	5260
250 SMB	4180	4180	5260	5260	6020	6020	6630	6630	3320	3320	4180	4180	4780	4780	5260	5260
280 SMA	5000	5000	6200	6200	7100	7100	7350	7350	4500	4500	5400	5400	6250	6250	6500	6500
280 SMB	5000	5000	6200	6100	-	-	-	-	4400	4400	5300	5300	-	-	-	-

Permissible axial forces

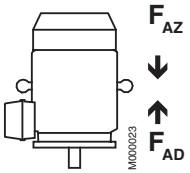

Aluminum motors, motor sizes 71 - 280

Mounting arrangement IM B5

Motor size	20,000 hours								40,000 hours							
	2-pole		4-pole		6-pole		8-pole		2-pole		4-pole		6-pole		8-pole	
	F_{AD} N	F_{AZ} N	F_{AD} N	F_{AZ} N	F_{AD} N	F_{AZ} N	F_{AD} N	F_{AZ} N	F_{AD} N	F_{AZ} N	F_{AD} N	F_{AZ} N	F_{AD} N	F_{AZ} N	F_{AD} N	F_{AZ} N
71	998	470	1085	555	1150	620	1145	615	910	385	985	455	1035	505	1030	500
80	1320	685	1445	790	1530	880	1565	915	1200	565	1310	655	1375	725	1400	750
90	1390	900	1525	1035	1625	1130	1670	1180	1255	770	1370	880	1450	955	1485	990
100	2855	1890	3135	2155	3320	2340	3420	2425	2590	1625	2820	1840	2970	1990	3050	2060
112 M	1560	1430	1680	1510	1810	1640	1840	1660	1380	1250	1470	1300	1580	1410	1600	1420
112 MB	1610	1440	1700	1490	1820	1610	1860	1650	1420	1250	1490	1260	1590	1380	1620	1410
132 SA	2660	2480	-	-	-	-	-	-	2350	2170	-	-	-	-	-	-
132 SB	2670	2470	-	-	-	-	-	-	2360	2160	-	-	-	-	-	-
132 SC	2660	2370	-	-	-	-	-	-	2350	2060	-	-	-	-	-	-
132 S	-	-	2900	2630	3090	2810	3200	2870	-	-	2570	2300	2720	2440	2810	2480
132 M	-	-	2910	2590	-	-	3210	2820	-	-	2580	2260	-	-	2820	2430
132 MA	-	-	-	-	3100	2770	-	-	-	-	-	-	2730	2400	-	-
132 MB	-	-	2890	2470	3100	2710	3150	2720	-	-	2550	2130	2740	2350	2770	2340
132 MC	-	-	-	-	3040	2610	-	-	-	-	-	-	2670	2240	-	-
160 MA	4940	4520	-	-	-	-	5520	4960	4430	4010	-	-	-	-	4920	4360
160 M	4960	4500	5500	4960	5540	4900	5540	4900	4450	3990	4910	4370	4950	4310	4950	4310
160 L	5520	4960	5560	4880	5420	4680	5170	4280	4930	4370	4970	4290	4840	4100	5190	4300
160 LB	5540	4940	5420	4680	5170	4280	5170	4280	4950	4350	4840	4100	5190	4300	5190	4300
180 M	4990	4330	5400	4500	-	-	-	-	4580	3920	4950	4050	-	-	-	-
180 L	-	-	5390	4350	5770	4630	5930	4810	-	-	4910	3870	5280	4140	5410	4290
180 LB	5040	4280	5470	4270	5810	4590	5980	4760	4630	3870	4990	3790	5320	4100	5460	4240
200 MLA	3600	2500	4580	3120	5280	3530	5720	3980	2970	1870	3780	2320	4370	2620	4720	2980
200 MLB	3600	2500	4580	3120	5280	3530	5720	3980	2970	1870	3780	2320	4370	2620	4720	2980
200 MLC	3600	2500	-	-	5280	3530	-	-	2970	1870	-	-	4370	2620	-	-
225 SMA	-	-	5230	3440	-	-	6530	4400	-	-	4330	2550	-	-	5400	3270
225 SMB	4140	2740	5230	3440	6030	3900	6530	4400	3430	2030	4330	2550	5010	2870	5400	3270
225 SMC	4140	2740	5230	3440	6030	3900	6530	4400	3430	2030	4330	2550	5010	2870	5400	3270
250 SMA	5020	3330	6380	4150	7440	4610	8050	5210	4160	2470	5290	3060	6200	3360	6680	3840
250 SMB	5020	3330	6380	4150	7440	4610	8050	5210	4160	2470	5290	3060	6200	3360	6680	3840
280 SMA	5950	4050	7380	5010	8540	5660	8810	5890	5450	3550	6580	4210	7690	4810	7960	5040
280 SMB	5950	4050	7380	5010	-	-	-	-	5450	3550	6580	4210	-	-	-	-

Permissible axial forces

Cast iron motors, motor sizes 71 - 450

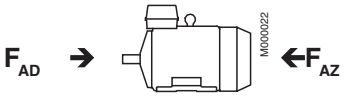

Mounting arrangement IM B3

Motor size	20,000 hours								40,000 hours							
	2-pole		4-pole		6-pole		8-pole		2-pole		4-pole		6-pole		8-pole	
	F_{AD} N	F_{AZ} N	F_{AD} N	F_{AZ} N	F_{AD} N	F_{AZ} N	F_{AD} N	F_{AZ} N	F_{AD} N	F_{AZ} N	F_{AD} N	F_{AZ} N	F_{AD} N	F_{AZ} N	F_{AD} N	F_{AZ} N
71	270	270	350	350	440	440	1)	1)	1)	1)	1)	1)	1)	1)	1)	1)
80	820	460	1010	650	1180	820	1)	1)	1)	1)	1)	1)	1)	1)	1)	1)
90	900	380	1110	590	1260	740	1)	1)	1)	1)	1)	1)	1)	1)	1)	1)
100	1330	440	1620	730	1820	940	1)	1)	1)	1)	1)	1)	1)	1)	1)	1)
112	1330	440	1610	720	1820	930	1)	1)	1)	1)	1)	1)	1)	1)	1)	1)
132 S_	1880	850	2330	1290	2650	1610	1)	1)	1)	1)	1)	1)	1)	1)	1)	1)
160	2820	1910	3560	2650	4150	3240	4630	3720	2220	1310	2780	1870	3230	2320	3590	2680
180	3190	2280	4080	3170	4720	3810	5260	4350	2500	1590	3160	2250	3640	2740	4060	3150
200	4230	2960	5380	4120	6270	5000	6960	5700	3320	2060	4184	2920	4850	3590	5380	4120
225	4740	3270	6070	4600	7020	5550	7830	6360	3720	2250	4720	3250	5430	3970	6050	4590
250	6470	3370	8100	5000	9250	6150	10220	7130	5220	2130	6440	3340	7300	4210	8040	4950
280 SM_	4200	6250	6000	8000	5250	11250	8300	10300	2900	4900	4250	6250	5150	7150	5950	7950
315 SM_	4180	6200	7400	9400	8900	10900	10000	12000	2850	4850	5250	7250	6350	8350	7200	9000
315 ML_	4050	6050	7250	9250	8650	10650	9500	11900	2750	4750	5100	7100	6100	8100	6900	8800
315 LK_	4000	5950	7100	9150	8500	10500	9750	11750	2650	4650	5000	7000	5950	7950	6900	8900
355 SM_	3050	6850	8600	12400	10550	14350	12200	16000	1750	5550	5900	9700	7300	11100	8550	12350
355 ML_	2900	6700	8350	12150	10100	13900	12000	15800	1600	5400	5650	9450	6900	10700	7300	11000
355 LK_	2850	6650	8200	12000	9900	13700	11450	15250	1550	5350	5450	9250	6700	10500	7800	11600
400 LK_	2150	7150	7100	13100	8850	14850	10450	16450	1)	5800	4300	10300	5500	11500	6750	12750
400 L_	2150	7150	7100	13100	8850	14850	10450	16450	1)	5800	4300	10300	5500	11500	6750	12750
450 L_	1800	6800	7600	13500	9000	15000	10800	16800	1)	5500	4500	10500	5600	11500	7000	12900

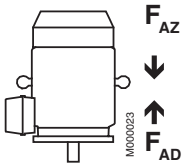

Mounting arrangement IM V1

Motor size	20,000 hours								40,000 hours							
	2-pole		4-pole		6-pole		8-pole		2-pole		4-pole		6-pole		8-pole	
	F_{AD} N	F_{AZ} N	F_{AD} N	F_{AZ} N	F_{AD} N	F_{AZ} N	F_{AD} N	F_{AZ} N	F_{AD} N	F_{AZ} N	F_{AD} N	F_{AZ} N	F_{AD} N	F_{AZ} N	F_{AD} N	F_{AZ} N
71	290	260	380	330	460	420	1)	1)	1)	1)	1)	1)	1)	1)	1)	1)
80	850	440	1060	650	1220	800	1)	1)	1)	1)	1)	1)	1)	1)	1)	1)
90	940	350	1150	550	1320	690	1)	1)	1)	1)	1)	1)	1)	1)	1)	1)
100	1400	390	1710	650	1940	860	1)	1)	1)	1)	1)	1)	1)	1)	1)	1)
112	1410	380	1730	640	1950	850	1)	1)	1)	1)	1)	1)	1)	1)	1)	1)
132 S_	2010	730	2520	1150	2890	1440	1)	1)	1)	1)	1)	1)	1)	1)	1)	1)
160	3070	1660	4060	2320	4530	2890	4950	3350	2470	1060	3280	1530	3600	1970	3910	2310
180	3580	1980	4650	2680	5430	3340	5970	3890	2880	1280	3730	1760	4360	2260	4760	2680
200	4790	2480	6240	3550	7070	4300	7850	5020	3870	1560	5030	2340	5650	2890	6260	3430
225	5540	2670	7000	3860	8130	4700	8860	5480	4510	1650	5640	2500	6540	3100	7080	3700
250	7390	2640	9200	4080	10670	5000	11660	5970	6135	1380	7530	2410	8710	3040	9470	3780
280 SM_	5550	5150	7600	6550	9150	7500	10200	9000	4200	3800	5800	4750	7000	5350	7850	6700
315 SM_	5950	4600	9750	7500	11600	8300	13350	9900	4600	3300	7550	5300	9050	5750	10450	7000
315 ML_	6650	4300	10500	7050	12900	7800	13400	8300	5300	2900	8300	4900	10350	5250	11600	5400
315 LK_	7100	3350	11100	5850	13700	6100	14900	8300	5750	2450	8900	3700	11100	3550	12100	5450
355 SM_	6350	4250	13250	8600	15650	9580	17350	12500	4950	2900	10450	5850	12350	6270	13600	8900
355 ML_	7100	3700	14600	7950	18050	8600	21100	11650	5750	2350	11850	5150	14700	5300	17000	7600
355 LK_	7500	3150	15650	6600	19100	7050	21200	8700	6150	1800	12850	3800	15800	3750	17500	5000
400 LK_	8650	2150	16050	6400	18450	6750	20100	8350	7220	1)	13150	3400	15100	3400	16450	4700
400 L_	8650	2150	16050	6400	18450	6750	20100	8350	7220	1)	13150	3400	15100	3400	16450	4700
450 L_	11500	1)	20000	4400	26000	3700	27800	5500	1)	1)	17700	1200	22200	1)	23700	1350

1) On request
The values for sizes 355-400 are valid for non-sparking M3GP and increased safety M3HP motors. Values for flameproof M3JP/M3KP motors are available on request.

Low voltage motors and frequency converters for hazardous areas

Frequency converters provide significant benefits when used with motors for hazardous areas. The advantages include better process control through regulation of the motor speed, as well as energy savings, and therefore improved environmental performance.

Certain criteria must be taken into account to ensure the safety of the frequency converter and motor combination, as well as the maximum usability of the application. The requirements depend on the protection type in use and whether the motor is regarded as being one component within a wider system or a separate subsystem.

2

ABB offers hazardous area motors for use with variable speed drives with the following protection types: flameproof, increased safety (on request), non-sparking, and dust ignition proof. These motors are designed and certified for operation with frequency converters. Instructions for the different protection types, as well as for the most common types of converter, are provided below. If further information is needed, please do not hesitate to contact ABB.

A. Main requirements for hazardous area motors used with variable speed drives

1. Flameproof motors (Ex d, Ex de)

The standards specify that the motor must be dimensioned so that its maximum outer surface temperature is limited according to the temperature class (T4, T5, etc.). In most cases this requires either type tests or control of the outer surface temperature of the motor.

Most ABB flameproof motors for temperature class T4 have been type tested with ABB ACS800 converters utilizing Direct Torque Control (DTC), and these combinations can be selected using the loadability curves shown in Figures 2 and 4. Combined tests with DTC converters are needed only if the limits of the loadability curves are exceeded. On such cases also separate certification of the motor and converter combination may be required.

In the case of other, non DTC–controlled voltage source converters using pulse width modulation (PWM) control, combined tests are needed to confirm the correct thermal performance of the motor. These tests can be avoided if the motor is fitted with thermal sensors to control the surface temperature. Such motors have the following additional markings on their rating plate: - “PTC” with the tripping temperature and “DIN 44081/82”

In the case of voltage source PWM converters, like the ABB ACS550, with a minimum switching frequency of 3 kHz or higher, the instructions provided in section B/2.3 can be used for preliminary dimensioning.

For more information on using flameproof motors for temperature classes T5 and T6 with variable speed drives, please contact ABB.

2. Increased safety motors (Ex e)

The motor should always be tested together with the specified converter, and ABB therefore does not recommend the use of low voltage increased safety motors with variable speed drives.

3. Non-sparking motors (Ex nA)

According to the standards, the combination of motor and converter must be tested as a unit or dimensioned by calculation.

ABB non-sparking cast iron motors have been type tested with ABB ACS800 converters utilizing DTC control, and these combinations can be selected using the dimensioning instructions provided in section B/2.2. Combined tests with DTC converters are needed only if the limits of the loadability curves are exceeded. On such cases also separate certification of the motor and converter combination may be required.

In the case of ABB ACS550 and other voltage source PWM converters, combined tests are needed to confirm the correct thermal behavior of the motor. For preliminary dimensioning purposes, the instructions provided in section B/2.3 can be used. The final values must be verified by combined tests.

4. Dust ignition proof motors (DIP, Ex tD)

The standards specify that the motor must be dimensioned so that its maximum outer surface temperature is limited according to the temperature class (e.g. T125°C or T150°C). For more information on temperature classes lower than 125°C, please contact ABB.

ABB DIP/Ex tD motors (T125°C and T150°C) have been type tested with ACS800 converters utilizing DTC control, and these combinations can be selected using the dimensioning instructions provided in section B/2.3. Combined tests with DTC converters are needed only if the limits of the loadability curves are exceeded. On such cases also separate certification of the motor and converter combination may be required.

In the case of any other voltage source converter with PWM control, combined tests are needed to confirm the correct thermal performance of the motor. These tests can be avoided if the motor is fitted with thermal sensors to control the surface temperature. Such motors have the following additional markings on their rating plate: - “PTC” with the tripping temperature and “DIN 44081/82”.

In the case of voltage source PWM converters with a minimum switching frequency of 3 kHz or higher, the instructions provided in section B/2.2 can be used for preliminary dimensioning.

B. Other safety criteria

These criteria are imposed by the competent bodies in order to ensure the safe use of motors with converters in hazardous areas.

1. Type tests and certification

ABB has type tested and certified the complete range Exd, Ex de, Ex nA and Ex td/DIP motors for operation with frequency converters. On request, ABB can supply type test reports based on the test procedure specified by the Notified Bodies for a representative number of motors with ACS800 converters.

For PWM converters, in most cases a combined type test is required to ensure safe operation.

2. Motor dimensioning for variable speed applications

2.1 General

The voltage (or current) fed by the frequency converter is not purely sinusoidal. This may increase motor losses, vibration, and noise. Furthermore, a change in the distribution of the losses may affect the motor temperature balance and lead to increased bearing temperature.

When the motor is operating at low speeds the cooling capacity of the ventilation fan is decreased, which reduces the motor's loadability. A separate constant speed fan can be used to increase cooling capacity and loadability at low speeds.

When dimensioning a motor for variable speed applications, the continuous thermal dimensioning and short time overloads should be considered.

2.2 Thermal dimensioning with ABB ACS800 converters utilizing DTC control

In the case of ABB ACS800 converters utilizing DTC control, dimensioning can be done using the loadability curves (or load capacity curves) in Figures 2 and 3. The loadability curves show the maximum allowed continuous output torque of the motor as a function of supply frequency. The output torque is given as a percentage of the motor's nominal torque.

The dimensioning can also be done by using ABB's DriveSize dimensioning program. This tool can be downloaded from the ABB website (www.abb.com/motors&generators).

The loadability curves are based on nominal supply voltage.

Note: the maximum speed of the motor must not be exceeded even if the loadability curves extend to 100 Hz.

2.3 Thermal dimensioning with other voltage source PWM-type converters

For VSDs other than DTC-controlled ACS800 converters, preliminary dimensioning can be done using the guideline loadability curves in Figures 4 and 5. These guideline curves assume a minimum switching frequency of 3 kHz.

To ensure safe operation, the combination must either be tested for the specific protection type or thermal sensors must be fitted to control the surface temperature. Frequencies below 5 Hz should be avoided or tested separately.

Note: the actual thermal loadability of a motor may be lower than shown by the guideline curves.

2.4 Short time overloads

Short time overloading is usually possible with ABB flameproof motors. For the exact values, please see the motor's rating plate.

Overloadability is specified by three factors:

I_{OL}	Maximum short time current
T_{OL}	Length of allowed overload period
T_{COOL}	Cooling time required after each overload period. During the cooling period the motor current and torque must remain below the limit of allowed continuous loadability.

3. Operating speed

When a motor is used with a frequency converter, its actual operating speed may deviate considerably from its nominal speed (i.e. the speed stamped on the rating plate). When operating at higher speeds, ensure that the highest permissible rotational speed of the motor, or the critical speed of the equipment as a whole, is not exceeded.

The permitted maximum speed must be stated on a rating plate. This can be either a separate plate or the regular plate required for variable speed drive motors.

4. Thermal protection of windings

Most ABB Ex motors are equipped with PTC thermistors to prevent the winding temperatures from exceeding the thermal limits of the insulation materials (usually Insulation Class F). Please check the product specific data in the corresponding section of this catalogue.

In countries where the ATEX requirements are in force, the thermistors must be connected to a thermistor circuit relay. The relay must function independently and reliably trip off the supply to the motor according to the requirements of the "Essential Health and Safety Requirements" in Annex II, item 1.5.1 of the ATEX Directive 94/9/EC.

In countries where the ATEX requirements are not in force, it is nevertheless recommended that the thermistors are connected to a thermistor circuit relay that functions independently and will reliably trip off the supply to the motor.

Note: local installation rules may also allow the thermistors to be connected to equipment other than a thermistor relay, such as the control inputs of a frequency converter.

Note: the above recommendations do not apply to increased safety 'e' motors.

5. Rating plates

The following parameters must be shown on the rating plates of hazardous area motors intended for variable speed operation:

- speed or frequency range
- power range
- voltage range
- type of torque (constant or quadratic)
- converter type and required minimum switching frequency

These parameters shall be used while checking the suitability of a specific motor for its intended application and for setting the limits of operation for the converter.

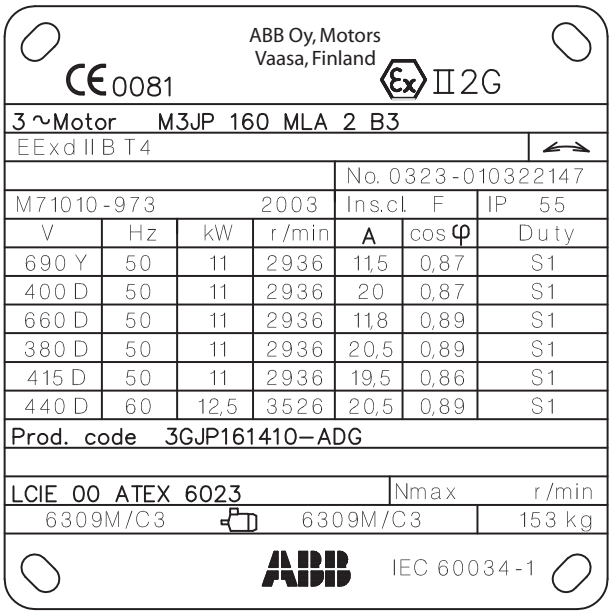

ABB Oy, Motors
Vaasa, Finland

CE 0081 Ex II 2G

3 ~ Motor M3JP 160 MLA 2 B3

EExd IIB T4

No. 0323-010322147

M71010-973 2003 Ins.cl. F IP 55

V	Hz	kW	r/min	A	cos φ	Duty
690 Y	50	11	2936	11,5	0,87	S1
400 D	50	11	2936	20	0,87	S1
660 D	50	11	2936	11,8	0,89	S1
380 D	50	11	2936	20,5	0,89	S1
415 D	50	11	2936	19,5	0,86	S1
440 D	60	12,5	3526	20,5	0,89	S1

Prod. code 3GJP161410–ADG

LCIE 00 ATEX 6023 Nmax r/min

6309M/C3 6309M/C3 153 kg

ABB IEC 60034-1

M000196

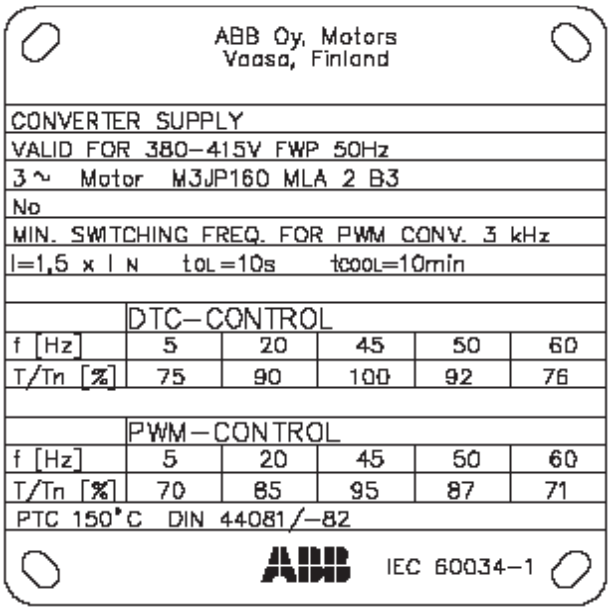

ABB Oy, Motors
Vaasa, Finland

CONVERTER SUPPLY

VALID FOR 380–415V FWP 50Hz

3 ~ Motor M3JP160 MLA 2 B3

No

MIN. SWITCHING FREQ. FOR PWM CONV. 3 kHz

I=1,5 x I N tOL=10s tcool=10min

DTC–CONTROL

f [Hz]	5	20	45	50	60
T/Tn [%]	75	90	100	92	76

PWM–CONTROL

f [Hz]	5	20	45	50	60
T/Tn [%]	70	85	95	87	71

PTC 150°C DIN 44081/–82

ABB IEC 60034–1

M000180

C. Technical criteria

1. Lubrication

The effectiveness of the motor lubrication should be checked by measuring the surface temperature of the bearing endshields under normal operating conditions. If the measured temperature is +80°C or above, the re-lubrication interval specified in ABB's Manual for motors for hazardous areas or shown on the lubrication information plate must be reduced. The re-lubrication interval should be halved for every 15 K increase in bearing temperature. If this is not possible, ABB recommends the use of lubricants suitable for high operating temperatures. These lubricants permit the normal re-lubrication interval to be maintained in spite of a 15 K increase in the bearing temperature.

In continuous operation at very low speeds, as well as at low temperatures, the lubrication capabilities of standard greases may not be sufficient, making it necessary to use special greases with additives.

If the motor is equipped with sealed bearings (i.e. bearings greased for life) any deviation in the operating temperature from the design temperature will result in a change in the lifetime of the bearing.

The use of conductive greases for the elimination of bearing currents is not recommended due to their poor lubrication characteristics and low conductivity.

2 Winding insulation

The output voltage of voltage source frequency converters consists of steep voltage pulses. These pulses can be even higher and steeper when arriving at the motor terminals due to reflecting pulses in the cables. The motor's insulation must therefore be selected according to the actual pulses at the motor terminals.

2.1 Phase to phase voltages

The maximum allowed phase to phase voltage peaks at the motor terminals as a function of pulse rise time can be seen in Figure 1.

Figure 1. Allowed phase to phase voltage peaks at motor terminals as a function of rise time.

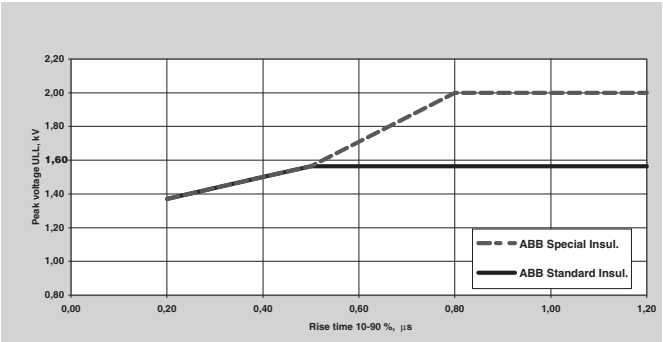

The highest curve (“ABB Special Insulation”) applies to random wound motors with a special winding insulation for frequency converter supply, variant code 405.

The “ABB Standard Insulation” curve applies to all other random wound motors covered by this catalogue.

2.2 Phase to ground voltages

The allowed phase to ground voltage peaks at the motor terminals are:

Standard Insulation 1300 V peak

Special Insulation 1800 V peak

2.3 Selection of winding insulation for ACS800 supplied motors

In the case of ABB ACS800 single drives with a diode supply unit, the motor winding insulation and frequency converter output filters can be selected using Table 2.

Table 2. Selection of winding insulation for motors used with ACS800 converters

Nominal supply voltage U_N of converter	Winding insulation and filters required
$U_N \leq 500$ V	ABB Standard Insulation
$U_N \leq 600$ V	ABB Standard Insulation + dU/dt filters
	OR
	ABB Special Insulation (variant code 405)
$U_N \leq 690$ V	ABB Special Insulation (variant code 405)
	AND
	dU/dt filters at converter output

dU/dt filters

These filters are series reactors which decrease the rate of change of the phase and main voltages and thus reduce voltage stresses in the windings. They also decrease common mode currents and the risk of bearing currents.

For more information on resistor braking and converters with controlled supply units, please contact ABB.

2.4 Selection of winding insulation with all other converters

The voltage stresses must be restricted so they remain below the accepted limits. The effect of any filters that are fitted must be taken into account when dimensioning the motor.

3. Bearing currents

Bearing voltages and currents must be avoided in all variable speed applications to ensure the reliability and safety of the application. For this purpose insulated bearings or bearing constructions, common mode filters and suitable cabling and grounding methods must be used.

3.1 Elimination of bearing currents with ABB ACS800 converters

In the case of ABB ACS800 converters with a diode supply unit (uncontrolled DC voltage), the following methods must be used to avoid harmful bearing currents in the motors:

Frame size	
250 and smaller	No action needed
280 – 315	Insulated non-drive end bearing
355 – 450	Insulated non-drive end bearing
	AND
	Common mode filter at the converter

Common mode filters

Common mode filters consist of toroidal cores, which reduce common mode currents in VSD applications and thus decrease the risk of bearing currents. Common mode filters do not significantly affect the phase or main voltages on the motor terminals.

For more information and product codes, please contact ABB.

Insulated bearings

Bearings with insulated inner or outer rings are used as standard. Hybrid bearings, i.e. bearings with non-conductive ceramic balls, can also be used in special applications. More information for selecting the correct parts is available on request.

ABB uses insulated bearings which have aluminum oxide coated inner and/or outer bores or ceramic rolling elements. Aluminum oxide coatings are also treated with a sealant to prevent dirt and humidity from penetrating into the porous coating. For the exact type of bearing insulation, see the motor rating plate. It is not permitted to change the bearing type or insulation method without permission from ABB.

3.2 Elimination of bearing currents with all other converters

The user is responsible for protecting the motor and driven equipment from harmful bearing currents. The instructions provided in section 3.1 can be followed, but their effectiveness cannot be guaranteed in all cases.

4. Cabling, grounding and EMC

The use of a frequency converter places greater demands on the cabling and grounding of the drive system. To provide proper grounding and ensure compliance with any applicable EMC requirements, motors above 30 kW should be cabled using shielded symmetrical cables and EMC glands, i.e. cable glands providing 360° bonding. Symmetrical and shielded cables are also highly recommended for smaller motors. For motors in frame size IEC 280 and upward, additional potential equalization between the motor frame and the driven equipment is needed, unless both are mounted on a common steel base. In this case, the high frequency conductivity of the connection provided by the steel base should be checked.

More information about grounding and cabling of variable speed drives can be found in the manual “Grounding and cabling of the drive system” (Code: 3AFY 61201998)

Please note that proper cable glands providing 360° bonding, or equivalent, must also be used for the converter and safety switch, if fitted.

The correct grounding of the motor and driven equipment is also important for the avoidance of bearing voltages and currents.

D. Ex motor loadability curves

The loadability curves shown in Figures 2 and 3 are based on type tests using ACS800 frequency converters with DTC control. The loadability curves assume that the nominal frequency of the motor (i.e. field weakening point) is 50 Hz or 60 Hz and that the motor control mode (parameter 99.04) is DTC. The DriveSize dimensioning program also utilizes the same curves.

For VSDs other than DTC-controlled ACS800 converters, preliminary dimensioning can be done using the guideline loadability curves in Figures 4 and 5.

Loadability curves with ACS800 converters utilizing DTC control

Figure 2. Flameproof motors Ex d, Ex de T4, cast iron (type M3GP) dust ignition proof motors, (DIP/Ex tD 150°C); nominal frequency of motor 50/60 Hz

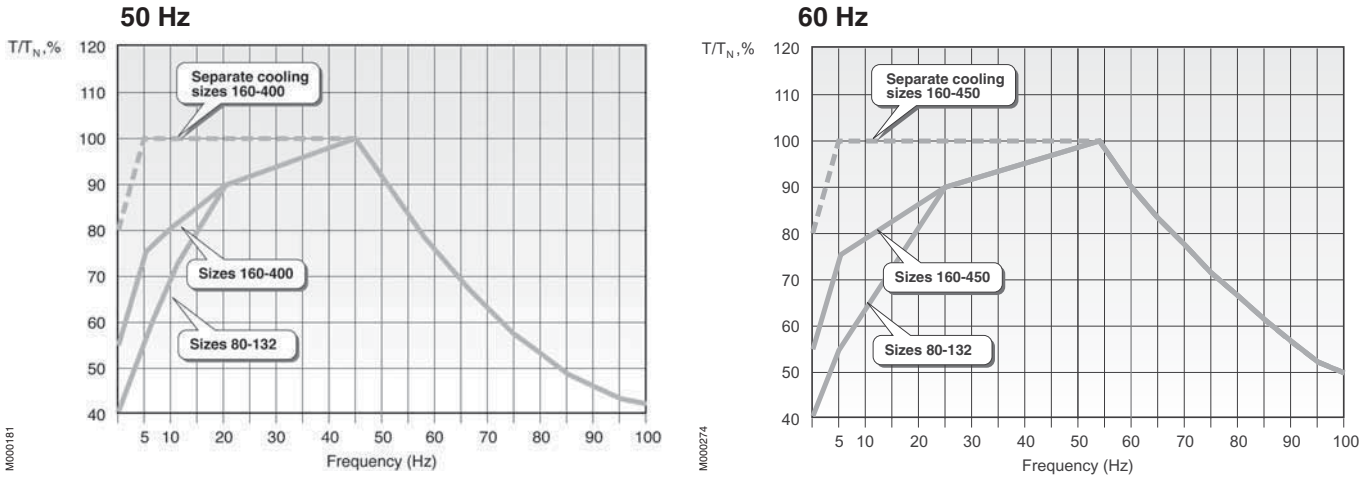

Figure 3. Non-sparking motors Ex nA, cast iron (type M3GP) and aluminum dust ignition proof motors (DIP/Ex tD T125°C), nominal frequency of motor 50/60 Hz

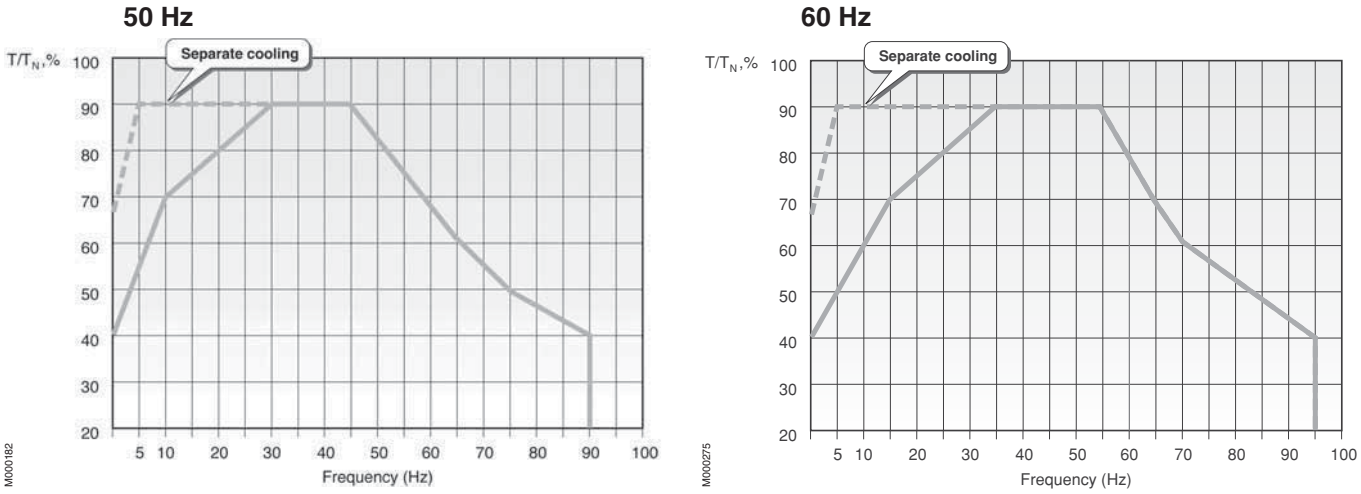

Guideline loadability curves with other voltage source PWM-type converters

Figure 4. Flameproof motors Ex d, Ex de T4, cast iron dust ignition proof motors (DIP/Ex tD T150°C); nominal frequency of motor 50/60 Hz

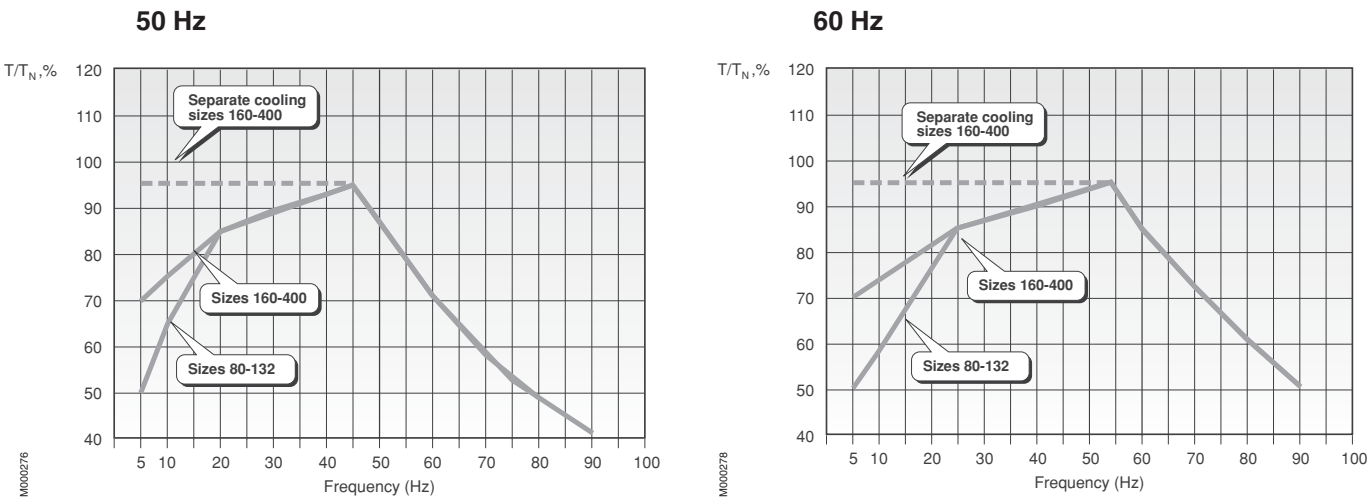

Figure 5. Non-sparking motors Ex nA, cast iron dust ignition proof motors (DIP/Ex tD T125°C); nominal frequency of motor 50/60 Hz

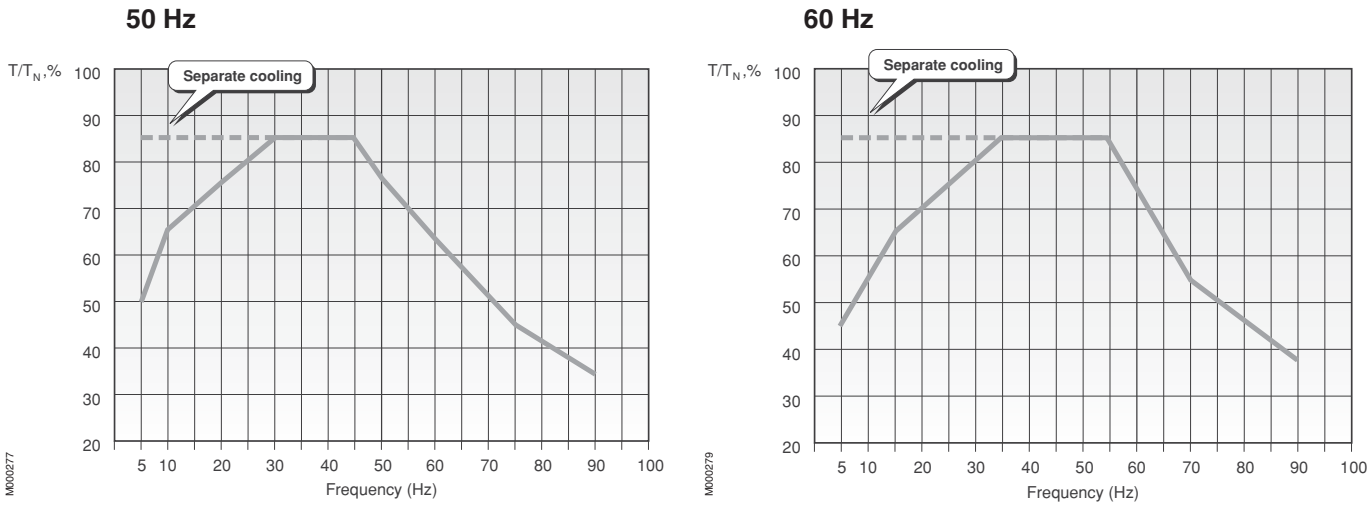

High voltage motors and frequency converters for hazardous areas

Frequency converters provide significant benefits when used with motors for hazardous areas. The advantages include better process control through adjustment of the motor speed, as well as energy savings, and therefore improved environmental performance.

Certain criteria must be considered to ensure that the combination of frequency converter and motor can be used safely. The requirements depend on the protection type in use. The motor can either be considered alone or as a part of a system, which is how most motor users view the situation.

For use with variable speed drives ABB offers hazardous area motors with protection types for flameproof, increased safety, non sparking, as well as dust ignition protected motors.

2

Main requirements for hazardous area motors used with variable speed drives

Non-sparking motors (Ex nA)

Certification can be based on type test results or calculation results (depends on the agreement between manufacturer and certification authority)

Certificate for Ex nA motors with frequency converter can be announced by factory or authorized certification

body (third party certification). Many Ex nA motors have already standard type certificate with ABB frequency converter, for example ACS 600, ACS 800 and ACS 1000.

Flameproof motors (Ex d, Ex de)

Certification can be based on type test results or calculation results (depends on the agreement between manufacturer and certification authority).

Ex d motor used with frequency converter are certified by authorized notified body (third party certification) for motor series. The certification is independent of the converter type (ABB or other). The descriptive documentation for the motor shall include the necessary parameters and conditions required for use with a converter.

Motors for demanding industries

General design

– Standardized motors to meet IEC recommendations and CENELEC standards
– Corrosion and weather protected motors
– Offshore application: IP 55 or IP 56 on request
– Frame material: cast iron, aluminum
– Insulation: class F
– Temperature rise: according class B
– High overload capacity: $T_{max} / T_N > 1.8$
– Accelerating torque: > 10%
– High starting performance
– Low noise level: < 85 dB(A)
– Design for variable speed applications

Safety of goods and personnel

– Explosion protection required:

Standard	Ex nA	Ex e	Ex d	Ex de
Yes	Yes	Yes	Yes	Yes

Variable speed applications

– Ex d, Ex de -motors are certified with included thermistors. A separate rating plate shows the regulation field and torque characteristics.
– Ex nA -motors certified

Corrosion protection when needed

– Stainless steel screws
– Stainless steel grease nipples
– Stainless steel rating plates
– Corrosion resistant drain hole plug
– Radial seal, V-ring
– Fan made of reinforced glass fiber laminate
– 2 layers coating epoxy paint system
– Steel fan cover with epoxy coating
– Rotor and stator core corrosion protected

Interchangeability

– IEC output
– Network: 50 Hz or 60 Hz
– Large capacity of cable entries
– Double fixation holes on the majority of foot-mounted motors
– One earthing bolt in the terminal box and one on the frame
– Jacking bolts to make coupling easier as option
– Balancing half key as standard, full key available as option

Running efficiency

– High efficiency motors
– Minimum power factor requested
– Efficiency corresponding to highest EU efficiency levels EFF1
– Winding protection as option; PTC or PT100
– Grease nipples as option
– SPM nipples as option
– Balancing close to class R
– Bearing lifetime L_{10}, 40.000 h
– Bearing temperature rise max. +55K

Approved design for specifications

– EEMUA (Engineering Equipment and Materials Users Association) - Variant code 773
– NORSOK (North Sea Territorial Waters) - Variant code 774
– SHELL DEP 33.66.05.31 - Gen, January 1999 - Variant code 775
– UIC (Union des Industries Chimiques) - Variant code 787
– VIK (Verband der industriellen Energie- und Kraftwirtschaft e.V.) - Variant code 421

Motors for marine applications

For hazardous area motors in marine applications please contact ABB for further information. See also our product catalogue for marine motors.

Specification

Motors acc. to VIK (Verband der industriellen Energie- und Kraftwirtschaft e.V.) – Variant code 421

General design for demanding industries

– Standardized motors to meet IEC recommendations and CENELEC standards
– Frame material: cast iron
– Insulation: class F
– Temperature rise: according class B
– Low noise level: < 77 dB(A) (+3 dB(A) tolerance)
– Degree of protection: Min. IP 54

2

Safety of goods and personnel

– Explosion protection availability:

Standard	Ex nA	Ex e	Ex d	Ex de
Yes, practically Ex nA	Yes	Yes	No	Yes

Corrosion protection

– Stainless steel rating plates
– Fan made of reinforced glass fiber laminate or aluminum
– Heavy industry paint system (70 µm epoxy)

Interchangeability

– Nominal voltages 380-400-415 V; voltage 420 V 0n request
– IEC output and dimensions
– Shaft dimension requirements for 315, 355 and 400
– Wide range voltage up to frame size 250
– Stamping of 'VIK' on rating plate
– Additional rating plate in terminal box
– Prepared for mounting of customer identification plate
– Stamping of weight for motors above 30 kg
– Drainage hole in flange for IM V3
– Plugs in unused fixation holes on foot-mounted motors
– Drainage holes, when provided, must be closed
– Terminal box 90° turnable without turning terminal board
– Terminal box with gland plate from size M3_80 (Cast iron Ex de, Ex nA and Ex e)
– Split terminal box from size M3_80 (Cast iron Ex de, Ex nA and Ex e), except 160-180
– Undetachable screws in terminal box cover
– Earthing terminal on frame
– Half key balanced
– Ex e up to size 200 (incl.): one rating plate for T1/T2 and one for T3
– Minimum t_E = 7 sec for Ex e

Running efficiency

– Nominal bearing life ≥ 40000 h in coupling
– Regreasable bearings available from size 250
– Button head grease nipples acc. to DIN 3404
– Grease intervals (amb. temp. 40°C) for 2 pole motors: min. 2000 h
– Grease intervals (amb. temp. 40°C) for 4-12 pole motors: min. 4000 h

Service

– Stock availability

Specifications approved for operations by:

– Amoco
– Basf
– Bayer
– Degussa
– Dow Chemical
– CSM
– Henkel

Flameproof motors
Ex d/Ex de IIB/IIC T4

Totally enclosed squirrel cage three phase low voltage motors, Sizes 80 - 400, 0.55 to 710 kW

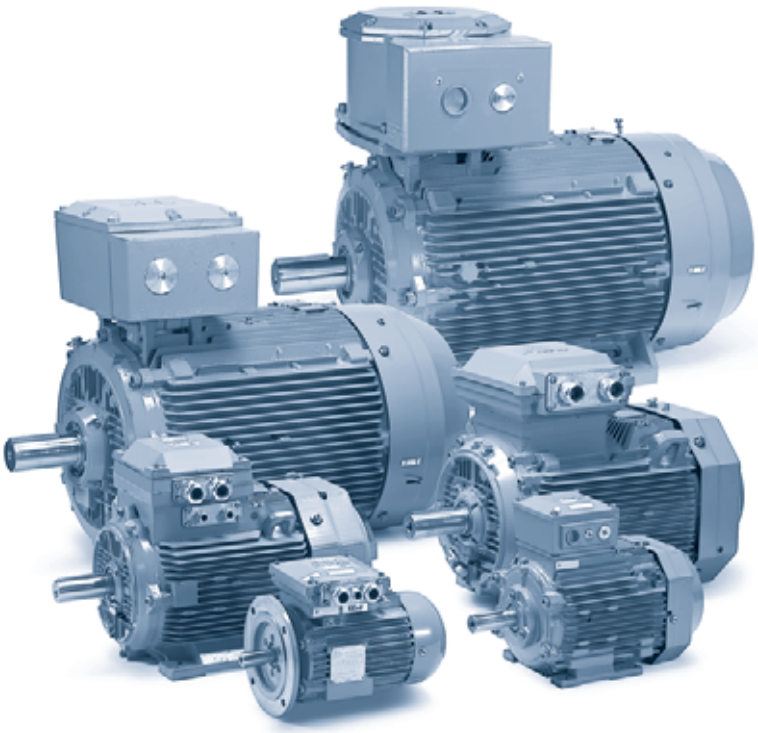

3

www.abb.com/motors&generators

> Motors

>> Motors and Generators for Hazardous Areas

Mechanical design.....36

Ordering information.....41

Technical data.....42

Rating plates.....51

Variant codes.....52

Dimension drawings 57

Flameproof motors in brief.....61

Terminal box, general

Terminal boxes are mounted on the top of the basic version of flame proof motors. The terminal box of Ex d motors 80-250 can be turned 4 x 90°, Ex d 280-400 2 x 180° after the delivery. When ordering Ex d motors 280-400 with 4 x 90°, the position of the terminal box has to be defined.

The terminal box can be equipped with cable glands or from motor size 280 with cable boxes in motor type Ex de. Terminations are suitable for Cu- and Al-cables. For a horizontal mounted motor the cable entry is normally located on the right-hand side, seen from D-end, for other positions see variant codes.

Flameproof terminal box (Ex d-motor)

The flameproof terminal box complies with the requirements of this enclosure type and effectively prevents the transmission of an internal explosion to the surrounding, potentially explosive atmosphere.

To maintain the integrity of this enclosure, connections must be made in accordance with the safety standards applicable to this type of terminal box. Furthermore, sealing must be selected corresponding to the type of supply cable used.

Cable entries

Unless otherwise specified, motors are delivered **without** cable glands with threaded cable entries for flameproof cable gland according to the table below. In frame sizes 100 to 400, the terminal box has two main cable entries with metric thread, one plugged with a flameproof metal plug. The auxiliary cable entry is also with metric thread, plugged with a flameproof metal plug. NPT threads are available on request.

3

Metric threads (as standard)

Motor size	**Main cable entries**		Max. supply cable area mm²	Terminal bolt size **6 x**	**Auxiliary cable entries** (heaters, thermistors etc.)	
	Thread	Metal plug			Thread	Metal plug
80 - 90	1 x M25 x1.5	–	10	M5	1 x M20 x 1.5	1 x M20 x 1.5
100 - 132	2 x M32 x1.5	1 x M32	10	M5	1 x M20 x 1.5	1 x M20 x 1.5
160 - 180	2 x M40 x1.5	1 x M40	35	M6	2 x M20 x 1.5	2 x M20 x 1.5
200 - 250	2 x M50 x1.5	1 x M50	70	M10	2 x M20 x 1.5	2 x M20 x 1.5
280	2 x M63 x1.5	1 x M63	2 x 150	M10	2 x M20 x 1.5	2 x M20 x 1.5
315	2 x M63 x1.5	1 x M63	2 x 240	M10	2 x M20 x 1.5	2 x M20 x 1.5
355 - 400	2 x M75 x1.5	1 x M75	2 x 240	M10	2 x M20 x 1.5	2 x M20 x 1.5

NPT threads as option, variant code 730 = Prepared for NPT cable glands

Motor size	**Main cable entries**			**Auxiliary cable entries** (heaters, thermistors etc.)	
	Thread	NPT plug	Max. possible thread size	Thread	NPT plug
80-112	1X3/4"	-	1x1"	1x3/4"	1x3/4"
132	2x3/4"	1x3/4"	1x1"	1x3/4"	1x3/4"
160-180	2x1 1/4"	1x1 1/4"	1 or 2x1 1/2"	2x3/4"	2x3/4"
200-250	2x1 1/2"	1x1 1/2"	1 or 2x2"	2x3/4"	2x3/4"
280	2x2"	1x2"	1 or 2x3"	1x3/4"	1x3/4"
315	2x3"	1x3"	1 or 2x3"	1x3/4"	1x3/4"
355-400	2x3"	1x3"	1 or 2x3"	1x3/4"	1x3/4"

Supply of cable glands (Ex d)

Cable glands are either fitted to the motor, or delivered loose to avoid damage during transport. For ordering, see variant codes. Other types are available on request. Unless otherwise specified when ordering cable glands, and when data on the cables have not been provided when ordering, the cable glands listed below will be delivered. The unused opening is closed with a flameproof metal plug.

Variant code: 733 Standard cable gland Ex d IIB, non-armoured cable
735 Standard cable gland Ex d IIC, non-armoured cable

Motor size	Main cable entries				Auxiliary cable entries (heaters, thermistors etc.)			
	Thread	Gland	Closing plug	Outer cable diameter, mm IIB/IIC	Thread	Gland	Plug	Outer cable diameter, mm IIB/IIC
80 - 90	1xM25 x 1.5	1xM25	-	9-18	1xM20 x 1.5	1xM20		5-12
100 - 132	2xM32 x 1.5	1xM32	1xM32	17-26	1xM20 x 1.5	1xM20		5-12
160 - 180	2xM40 x 1.5	1xM40	1xM40	22-30	2xM20 x 1.5	1xM20	1xM20	5-12
200 - 250	2xM50 x 1.5	1xM50	1xM50	31-40	2xM20 x 1.5	1xM20	1xM20	5-12
280	2xM63 x 1.5	1xM63	1xM63	39-50	2xM20 x 1.5	1xM20	1xM20	5-12
315 - 400	2xM75 x 1.5	1xM75	1xM75	46-60	2xM20 x 1.5	1xM20	1xM20	5-12

Variant code: 728 Standard cable gland Ex d IIB, armoured cable, double sealing
732 Standard cable gland Ex d IIB, armoured cable
734 Standard cable gland Ex d IIC, armoured cable

Motor size	Main cable entries					Auxiliary cable entries (heaters, thermistors etc.)				
	Thread	Gland	Closing	Inner cable sheath, mm IIB/IIC	Outer cable sheath, mm IIB/IIC	Thread	Gland	Plug	Inner cable sheath, mm IIB/IIC	Outer cable sheath, mm IIB/IIC
80 - 90	1xM25 x 1.5	1xM25	–	14-18	19-25	1xM20 x 1.5	1xM20		6-10	10-16
100 - 132	2xM32 x 1.5	1xM32	1xM32	18-23	25-30	1xM20 x 1.5	1xM20		6-10	10-16
160 - 180	2xM40 x 1.5	1xM40	1xM40	23-28	30-36	2xM20 x 1.5	1xM20	1xM20	6-10	10-16
200 - 250	2xM50 x 1.5	1xM50	1xM50	32-37	40-46	2xM20 x 1.5	1xM20	1xM20	6-10	10-16
280	2xM63 x 1.5	1xM63	1xM63	43-50	53-60	2xM20 x 1.5	1xM20	1xM20	6-10	10-16
315 - 400	2xM75 x 1.5	1xM75	1xM75	48-60	58-70	2xM20 x 1.5	1xM20	1xM20	6-10	10-16

Note: For above mentioned cable glands and the associated cable diameters a clamping device on the gland is not available. In case clamping is required, cable diameters have to checked because the gland type has to be changed.

Examples of terminal boxes:

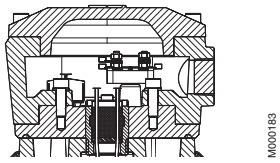

Motors sizes 80 - 132

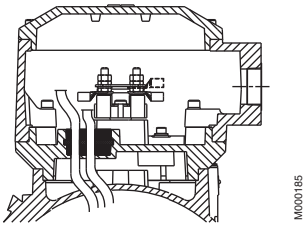

Motors sizes 200 - 250

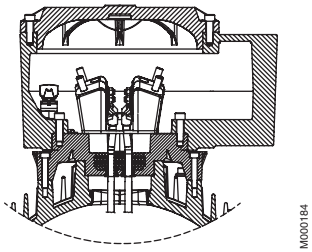

Motors sizes 280 - 315

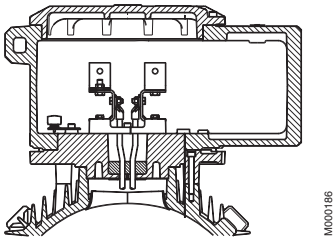

Motors sizes 355 - 400

Increased safety terminal box (Ex de-motors)

As an alternative a flameproof motor can be delivered with an increased safety terminal box. The certificate of approval for the flameproof motors also covers this application, referred to as Ex de.

The increased safety terminal box complies with the requirements of this type of enclosure and prevents all ignition sources such as sparks, excessive overheating etc. The features of the terminal box are: no self-loosening terminals, compliance with creepage distances and clearances specified in standards and cable gland with cable clamping.

Cable entries

Motors are delivered **with** cable glands or cable boxes according to the tables as standard. The terminal box in sizes 80-132 and 200-250 is 4x90° turnable as standard; in sizes 160-180 as easy option 4x90°.
In sizes 280-400 as standard 2x180° (cabling from both sides) and on order with corresponding variant codes cabling in axial direction possible.

In frame sizes 100 to 132 the terminal box has two main cable entries with metric thread. In frame sizes 160 to 250 the terminal box has also two main cable entries with metric threads; both are equipped with cable glands of a closed type. In frame sizes 280 to 400 the terminal box has two main metric cable glands, one equipped with a cable gland, one with a metal plug.

Motor size	Main cable entries						Auxiliary cable entries		
	Thread	Cable gland	Metal plug	Single core cross-section[1] mm²	Terminal bolt size 6 x	Outer cable shealth mm	Thread	Cable gland	Outer cable shealth mm
80-90	1xM25	(1x)M25x1.5	-	10	M5	10-16	1xM20x1.5	1xM20x1.5	8-14
100-132	2xM32	(2x)M32x1.5	-	10	M5	16-21	1xM20x1.5	1xM20x1.5	8-14
160-180	2xM40	(2x)M40x1.5	-	35	M6	18-27	2xM20x1.5	2xM20x1.5	8-14
200-250	2xM50	(2x)M50x1.5	-	70	M10	26-35	2xM20x1.5	2xM20x1.5	8-14
280-400	See tables on next pages						2xM20x1.5	2xM20x1.5	8-14

[1] Max. size maybe bigger, but depends on the used cable lug. Clearances must be acc. to Ex-standards

Supply of cable glands (Ex de)

Cable glands are either fitted to the motor, or delivered loose to avoid damage during transport. For ordering, see variant codes.

Unless otherwise specified when ordering cable glands, and when data on the cables have not been provided when ordering, the cable glands listed on the next page will be delivered. Other types are available on request.

Examples of terminal boxes:

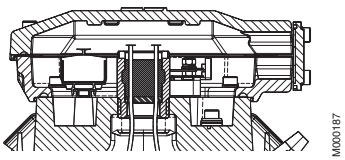

Motors sizes 80 - 132

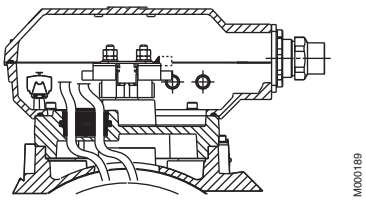

Motors sizes 160 - 250

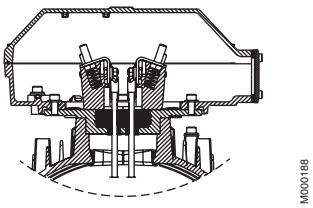

Motors sizes 280 - 315

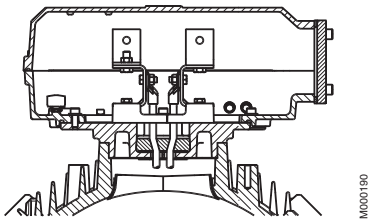

Motors sizes 355 - 400

Motor sizes 280-400 – Co-ordination of terminal boxes and cable entries

Motor sizes	Voltage/ freq. code	Ter-minal box	Top-mounted Flange or adapter	Cable box or cable gland	Gland thread	Cable diameter	Max.conn cable area mm²
3000 r/min (2 poles)							
280		210	3GZF294730-749	2x 3GZF294730-613	**2x M63x1.5**	2x Ø32-49	2x150
315SM, ML		370	3GZF294730-753	2x 3GZF294730-613	**2x M63x1.5**	2x Ø32-49	2x240
315LKA, LKB		370	3GZF294730-753	2x 3GZF294730-613	**2x M63x1.5**	2x Ø32-49	2x240
315LKC		750	3GZF294730-944	3GZF294730-301		2x Ø48-60	4x240
355 SMA	D	750	3GZF294730-944	3GZF294730-301		2x Ø48-60	4x240
355 SMA	E	370	3GZF294730-753	2x 3GZF294730-613	**2x M63x1.5**	2x Ø32-49	2x240
355 SMB, SMC		750	3GZF294730-944	3GZF294730-301		2x Ø48-60	4x240
355 ML, LK		750	3GZF294730-944	3GZF294730-501		2x Ø60-80	4x240
400 L, LK		750	3GZF294730-944	3GZF294730-501		2x Ø60-80	4x240
1500 r/min (4 poles)							
280		210	3GZF294730-749	2x 3GZF294730-613	**2x M63x1.5**	2x Ø32-49	2x150
315SM, ML		370	3GZF294730-753	2x 3GZF294730-613	**2x M63x1.5**	2x Ø32-49	2x240
315LKA, LKB		370	3GZF294730-753	2x 3GZF294730-613	**2x M63x1.5**	2x Ø32-49	2x240
315LKC		750	3GZF294730-944	3GZF294730-301		2x Ø48-60	4x240
355 SMA	D	750	3GZF294730-944	3GZF294730-301		2x Ø48-60	4x240
355 SMA	E	370	3GZF294730-753	2x 3GZF294730-613	**2x M63x1.5**	2x Ø32-49	2x240
355 SMB, SMC		750	3GZF294730-944	3GZF294730-301		2x Ø48-60	4x240
355 ML, LK		750	3GZF294730-944	3GZF294730-501		2x Ø60-80	4x240
400 L, LK		750	3GZF294730-944	3GZF294730-501		2x Ø60-80	4x240
1000 r/min (6 poles)							
280		210	3GZF294730-749	2x 3GZF294730-613	**2x M63x1.5**	2x Ø32-49	2x150
315		370	3GZF294730-753	2x 3GZF294730-613	**2x M63x1.5**	2x Ø32-49	2x240
355 SMA, SMB		370	3GZF294730-753	2x 3GZF294730-613	**2x M63x1.5**	2x Ø32-49	2x240
355 SMC	D	750	3GZF294730-944	3GZF294730-301		2x Ø48-60	4x240
355 SMC	E	370	3GZF294730-753	2x 3GZF294730-613	**2x M63x1.5**	2x Ø32-49	2x240
355 ML		750	3GZF294730-944	3GZF294730-301		2x Ø48-60	4x240
355 LKA		750	3GZF294730-944	3GZF294730-301		2x Ø48-60	4x240
355 LKB		750	3GZF294730-944	3GZF294730-501		2x Ø60-80	4x240
400 L, LK		750	3GZF294730-944	3GZF294730-501		2x Ø60-80	4x240
750 r/min (8 poles)							
280		210	3GZF294730-749	2x 3GZF294730-613	**2x M63x1.5**	2x Ø32-49	2x150
315		370	3GZF294730-753	2x 3GZF294730-613	**2x M63x1.5**	2x Ø32-49	2x240
355 SM		370	3GZF294730-753	2x 3GZF294730-613	**2x M63x1.5**	2x Ø32-49	2x240
355 ML	D	750	3GZF294730-944	3GZF294730-301		2x Ø48-60	4x240
355 ML	E	370	3GZF294730-753	2x 3GZF294730-613	**2x M63x1.5**	2x Ø32-49	2x240
355 LK		750	3GZF294730-944	3GZF294730-301		2x Ø48-60	4x240
400 LA, LB, LKA, LKB		750	3GZF294730-944	3GZF294730-301		2x Ø48-60	4x240
400 LC, LKC		750	3GZF294730-944	3GZF294730-301		2x Ø48-60	4x240

Voltage/frequency codes:
D = 380-420 VD 50 Hz, 660/690 VY 50 Hz, 440-480 VD 60 Hz
E = 500 VD 50 Hz, 575 VD 60 Hz

Terminal bolt sizes M12.

M3KP 280 - 315

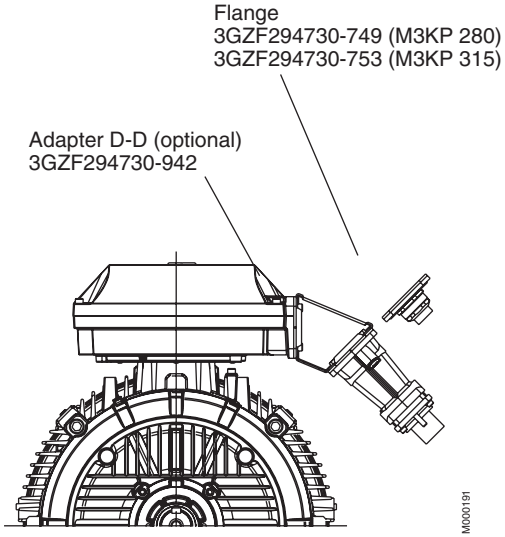

M3KP 355 - 400

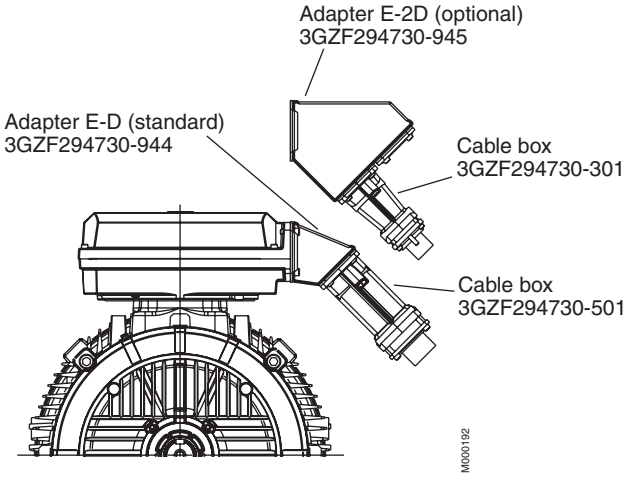

3

Auxiliary devices (view from N-end)

Cable glands for auxiliary devices
as standard 2 x M20 x 1.5.

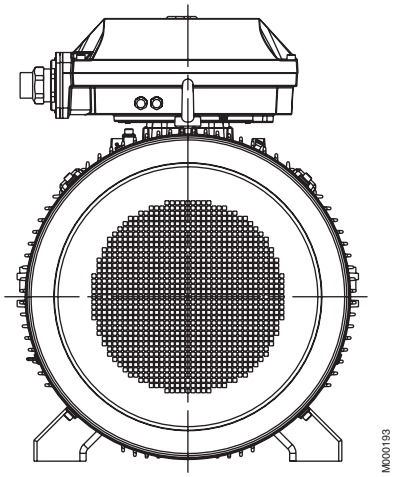

Dimensions for terminal box inlets

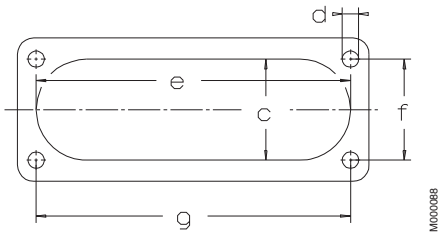

Inlet	c	e	f	g	d
C	62	193	62	193	M8
D	100	300	80	292	M10
E	115	370	100	360	M12

Ordering information

Sample order

When placing an order, please state the following minimum data in the order, as in example.

The product code of the motor is composed in accordance with the following example.

Motor type	M3JP 160 MLA
Pole number	2
Mounting arrangement (IM code)	IM B3 (IM 1001)
Rated output	11 kW
Product code	3GJP161410-ADA
Variant codes if needed	

Motor size

A	B	C	D, E, F, G
M3JP	**160 MLA**	**3GJP 161 410 -**	**A D A 003 etc.**

1 2 3 4 5 6 7 8 9 10 11 12 13 14

A Motor type
B Motor size
C Product code
- **D** Mounting arrangement code
- **E** Voltage and frequency code
- **F** Generation code

G Variant codes

Description of the product code:

Positions 1 - 4

3GJP = Totally enclosed frameproof motor E xd with cast iron frame

3GKP = Totally enclosed flameproof motor Ex de with cast iron frame

Positions 5 and 6

IEC-frame size

06 = 63	**10** = 100	**18** = 180	**28** = 280
07 = 71	**11** = 112	**20** = 200	**31** = 315
08 = 80	**13** = 132	**22** = 225	**35** = 355
09 = 90	**16** = 160	**25** = 250	**40** = 400

Position 7

Speed (pole pairs)

1 = 2 poles	**4** = 8 poles	**7** ≥12 poles
2 = 4 poles	**5** = 10 poles	**8** =Two-speed motors
3 = 6 poles	**6** = 12 poles	**9** = Multi-speed motors

Position 8-10 Running number series

Position 11 - (Dash)

Position 12

Mounting arrangement

A = Foot-mounted, top mounted terminal box
R = Foot-mounted, terminal box RHS seen from D-end
L = Foot-mounted, terminal box LHS seen from D-end
B = Flange-mounted, large flange with clearance holes
C = Flange-mounted, small flange with tapped holes
V = Flange-mounted, Special flange
H = Foot/flange-mounted, large flange with clearance holes
J = Foot/flange-mounted, small flange with tapped holes
S = Foot/flange-mounted, terminal box RHS seen from D-end
T = Foot/flange-mounted, terminal box LHS seen from N-end
F = Foot/flange-mounted, special flange

Position 13

Voltage/frequency code

See tables on the technical data pages.

Position 14

Generation code **G**

Generation code is followed by variant codes according to the hazardous area, see below and on corresponding pages with variant codes:

461	Ex d(e) design, Group IIC
462	Ex d(e) design, temperature class T5
463	Ex d(e) design, temperature class T6

Code letters for supplementing the product code for voltage and frequency:

Single speed motors

S	D	A [a]	B [a]	E	F [b]	X
380 VY 50 Hz	380 VΔ 50 Hz	380 VY 50 Hz	380 VΔ 50 Hz	500 VΔ 50 Hz	500 VY 50 Hz	Other rated voltage, connection
400 VY 50 Hz	400 VΔ 50 Hz	220 VΔ 50 Hz	660 VY 50 Hz	575 VΔ 60 Hz		or frequency, max. 690 V
415 VY 50 Hz	415 VΔ 50 Hz					
220 VΔ 50 Hz	660 VY 50 Hz	**G** [a]	**H** [a]	**T** [b]	**U** [b]	
230 VΔ 50 Hz	690 VY 50 Hz	415 VY 50 Hz	415 VΔ 50 Hz	660 VΔ 50 Hz	690 VΔ 50 Hz	
440 VY 60 Hz	440 VΔ 60 Hz					

[a] On request for motor sizes 315-400. [b] On request for motor sizes 355-400.

Two-speed motors

Motor	S	D	A	B	E	H	T	U	X
80-250	230V 50Hz	400V 50Hz	220V 50Hz	380V 50Hz	500V 50Hz	415V 50Hz	660V 50Hz	690 V 50 Hz	Other rated voltage
280-400	220-230V 50Hz	380-400V 50Hz	220V 50Hz	380V 50Hz	500V 50Hz	400-415V 50Hz			connection or freq.
	440-480v 60Hz				575v 60hZ	460-480v 60Hz			max. 690 V

Flameproof motors Ex d/Ex de IIB/IIC T4

Technical data for totally enclosed squirrel cage three phase motors

ATEX Certified

M000194

IP 55, IC 411; Insulation class F, temperature rise class B

Output kW 50 Hz	Output kW 60 Hz		Motor type		Product code	Speed r/min	Efficiency at FL 100%	Efficiency at 3/4 75%	Power factor cos ϕ	Current I_N A	Current I_s/I_N	Torque T_N Nm	Torque T_s/T_N	Torque T_{max}/T_N	Moment of inertia J=1/4GD² kgm²	Weight Ex d kg	Weight Ex de kg	Sound pressure level LP dB(A)
3000 r/min = 2-poles						**400 V 50 Hz**						**Basic design**						
0.75	**0.9**		**M3JP/KP**	**80 MA**	3GJP/KP 081 310-••G	2861	78.2	76.7	0.86	1.62	7.3	2.5	3.7	3.8	0.0006	37	28	59
1.1	**1.3**		**M3JP/KP**	**80 MB**	3GJP/KP 081 320-••G	2831	82.0	82.0	0.89	2.21	5.7	3.7	3.0	3.2	0.0007	39	30	59
1.5	**1.7**		**M3JP/KP**	**90 SLA**	3GJP/KP 091 010-••G	2881	82.7	82.6	0.88	3	6.7	5	3.0	3.5	0.001	50	41	61
2.2	**2.5**		**M3JP/KP**	**90 SLC**	3GJP/KP 091 030-••G	2871	85.3	85.8	0.90	4.19	7.5	7.3	2.7	3.5	0.0014	53	44	61
3	**3.5**		**M3JP/KP**	**100 LA**	3GJP/KP 101 510-••G	2896	87.4	87.7	0.90	5.6	7.2	10	2.2	3.0	0.0036	67	58	65
4	**4.6**		**M3JP/KP**	**112 MB**	3GJP/KP 111 320-••G	2901	87.7	87.8	0.90	7.5	7.2	13	3.6	3.7	0.0043	70	61	65
5.5	**6.3**		**M3JP/KP**	**132 SMB**	3GJP/KP 131 220-••G	2905	87.6	87.5	0.90	10.4	7.0	18	2.4	3.3	0.009	98	89	71
7.5	**8.6**		**M3JP/KP**	**132 SMD**	3GJP/KP 131 240-••G	2914	89.0	89.2	0.90	13.8	7.6	25	2.8	3.6	0.012	106	97	71
11	**12.7**		**M3JP/KP**	**160 MLA**	3GJP/KP 161 410-••G	2936	91.5	91.4	0.87	20	7.2	36	2.9	3.3	0.039	153	147	71
15	**17**		**M3JP/KP**	**160 MLB**	3GJP/KP 161 420-••G	2934	91.9	91.8	0.88	28	7.5	49	3.1	3.5	0.047	162	156	71
18.5	**21**		**M3JP/KP**	**160 MLC**	3GJP/KP 161 430-••G	2934	92.6	92.7	0.90	33	7.5	60	2.8	3.4	0.054	173	167	71
22	**25**		**M3JP/KP**	**180 MLA**	3GJP/KP 181 410-••G	2938	92.8	92.9	0.90	39	6.9	72	2.5	3.1	0.077	200	194	71
30	**35**		**M3JP/KP**	**200 MLA**	3GJP/KP 201 410-••G	2946	94.2	94.3	0.88	54	7.4	97	3.0	3.2	0.15	310	290	74
37	**43**		**M3JP/KP**	**200 MLC**	3GJP/KP 201 430-••G	2948	94.3	94.2	0.89	65	7.5	120	2.8	3.2	0.19	340	320	75
45	**52**		**M3JP/KP**	**225 SMB**	3GJP/KP 221 220-••G	2968	94.8	94.7	0.87	79	7.2	145	2.7	3.0	0.26	400	380	76
55	**63**		**M3JP/KP**	**250 SMA**	3GJP/KP 251 210-••G	2970	94.7	94.5	0.88	96	7.7	177	2.4	3.1	0.49	460	440	75
75	**90**		**M3JP/KP**	**280 SMA**	3GJP/KP 281 210-••G	2978	94.8	94.3	0.88	131	7.6	240	2.1	3.0	0.8	725	645	77
90	**105**		**M3JP/KP**	**280 SMB**	3GJP/KP 281 220-••G	2976	95.1	94.8	0.90	152	7.4	289	2.1	2.9	0.9	765	685	77
110	**125**		**M3JP/KP**	**315 SMA**	3GJP/KP 311 210-••G	2982	95.1	94.4	0.86	194	7.6	352	2.0	3.0	1.2	980	900	78
132	**155**		**M3JP/KP**	**315 SMB**	3GJP/KP 311 220-••G	2982	95.5	95.0	0.88	228	7.4	423	2.2	3.0	1.4	1040	960	78
160	**185**		**M3JP/KP**	**315 SMC**	3GJP/KP 311 230-••G	2981	96.1	95.6	0.89	269	7.5	513	2.3	3.0	1.7	1125	1045	78
200	**230**		**M3JP/KP**	**315 MLA**	3GJP/KP 311 410-••G	2980	96.3	95.9	0.90	336	7.7	641	2.6	3.0	2.1	1290	1210	78
250	**290**	2)	**M3JP/KP**	**355 SMA**	3GJP/KP 351 210-••G	2984	96.4	95.9	0.89	425	7.7	800	2.1	3.3	3	1790	1630	83
315	**362**	2)	**M3JP/KP**	**355 SMB**	3GJP/KP 351 220-••G	2980	96.6	96.3	0.89	535	7.0	1009	2.1	3.0	3.4	1870	1710	83
355	**410**	2)	**M3JP/KP**	**355 SMC**	3GJP/KP 351 230-••G	2984	96.8	96.5	0.88	604	7.2	1136	2.2	3.0	3.6	1940	1780	83
400	**450**	2)	**M3JP/KP**	**355 MLA**	3GJP/KP 351 410-••G	2982	96.9	96.7	0.88	680	7.1	1281	2.3	2.9	4.1	2190	2030	83
450	**510**	2)	**M3JP/KP**	**355 MLB**	3GJP/KP 351 420-••G	2983	97.1	97.0	0.90	750	7.9	1441	2.2	2.9	4.3	2270	2110	83
500	**0**	2)	**M3JP/KP**	**355 LKA**	3GJP/KP 351 810-••G	2982	97.1	97.0	0.90	830	7.5	1601	2.1	3.5	4.8	2510	2350	83
560	**630**	3)	**M3JP/KP**	**400 LA**	3GJP/KP 401 510-••G	2988	97.2	97.0	0.89	940	7.8	1790	2.1	3.4	7.9	3230	3070	82
560	**630**	3)	**M3JP/KP**	**400 LKA**	3GJP/KP 401 810-••G	2988	97.2	97.0	0.89	940	7.8	1790	2.1	3.4	7.9	3230	3070	82
630	**710**	3)	**M3JP/KP**	**400 LB**	3GJP/KP 401 520-••G	2987	97.4	97.3	0.89	1055	7.8	2014	2.2	3.4	8.2	3330	3170	82
630	**710**	3)	**M3JP/KP**	**400 LKB**	3GJP/KP 401 820-••G	2987	97.4	97.3	0.89	1055	7.8	2014	2.2	3.4	8.2	3330	3170	82
710	**780**	3)	**M3JP/KP**	**400 LKC**	3GJP/KP 401 830-••G	2987	97.5	97.4	0.89	1185	7.8	2270	2.6	3.4	9.3	3580	3420	82
710	**780**	3)	**M3JP/KP**	**400 LC**	3GJP/KP 401 530-••G	2987	97.5	97.4	0.89	1185	7.8	2270	2.6	3.4	9.3	3580	3420	82
3000 r/min = 2-poles						**400 V 50 Hz**						**High-output design**						
9.2	**10.6**		**M3JP/KP**	**132 SME**	3GJP/KP 131 250-••G	2875	86.2	86.6	0.91	17.1	6.1	30.6	2.2	2.9	0.012	106	97	77
22	**25**		**M3JP/KP**	**160 MLD**	3GJP/KP 161 440-••G	2929	91.7	91.6	0.90	39	7.4	72	2.8	3.4	0.059	179	173	77
30	**34**		**M3JP/KP**	**180 MLB**	3GJP/KP 181 420-••G	2944	93.0	92.9	0.88	54	7.5	97	2.8	3.5	0.092	216	210	78
37	**43**	4)	**M3JP/KP**	**180 MLC**	3GJP/KP 181 430-••G	2947	93.9	93.9	0.89	65	7.9	120	2.9	3.6	0.114	235	229	78
45	**52**		**M3JP/KP**	**200 MLE**	3GJP/KP 201 450-••G	2944	93.9	94.0	0.88	79	7.3	146	2.9	3.1	0.22	345	325	79
55	**63**		**M3JP/KP**	**225 SMC**	3GJP/KP 221 230-••G	2965	94.5	94.2	0.88	96	7.1	177	2.6	3.0	0.29	420	400	80
67	**73**	4) 5)	**M3JP/KP**	**225 SMD**	3GJP/KP 221 240-••G	2966	94.6	94.1	0.86	120	7.4	216	2.8	3.2	0.31	430	410	78
75	**84**		**M3JP/KP**	**250 SMB**	3GJP/KP 251 220-••G	2969	95.2	95.1	0.89	129	7.9	241	2.6	3.2	0.57	500	480	80
90	**96**	1) 5)	**M3JP/KP**	**250 SMC**	3GJP/KP 251 230-••G	2965	95.0	94.9	0.90	153	7.7	290	2.6	3.1	0.59	510	490	80
110	**125**		**M3JP/KP**	**280 SMC**	3GJP/KP 281 230-••G	2978	95.7	95.3	0.90	185	7.9	353	2.4	3.0	1.15	825	745	77

Notes:

When ordering IIC motors, following variant code has to be added: 461 = Ex d, Ex de design, Group IIC

Values above are given for 400 V 50 Hz; data for other voltages, frequencies, ambient temperatures and surface temperature T5 on request.

Flameproof motors Ex d/Ex de IIB/IIC T4

Technical data for totally enclosed squirrel cage three phase motors

ATEX Certified

IP 55, IC 411; Insulation class F, temperature rise class B

Output kW 50 Hz	Output kW 60 Hz		Motor type		Product code		Speed r/min	Efficiency at FL 100%	Efficiency at 3/4 75%	Power factor cos ϕ	Current I_N A	Current I_s/I_N	Torque T_N Nm	Torque T_s/T_N	Torque T_{max}/T_N	Moment of inertia J=1/4GD² kgm²	Weight Ex d kg	Weight Ex de	Sound pressure level LP dB(A)
1500 r/min = 4-poles							**400 V 50 Hz**						**Basic design**						
0.55	**0.66**		**M3JP/KP**	**80 MA**	3GJP/KP	082 310-••G	1421	77.2	76.4	0.76	1.4	4.9	3.7	2.3	2.7	0.001	38	29	59
0.75	**0.9**		**M3JP/KP**	**80 MB**	3GJP/KP	082 320-••G	1413	78.3	78.4	0.79	1.8	5.1	5.1	2.4	2.7	0.0012	38	29	59
1.1	**1.3**		**M3JP/KP**	**90 SLA**	3GJP/KP	092 010-••G	1435	80.8	80.3	0.81	2.48	5.9	7.3	2.8	3.5	0.002	51	42	54
1.5	**1.7**		**M3JP/KP**	**90 SLC**	3GJP/KP	092 030-••G	1431	81.8	81.8	0.81	3.31	6.4	10	2.9	3.4	0.003	53	44	54
2.2	**2.5**		**M3JP/KP**	**100 LA**	3GJP/KP	102 510-••G	1441	86.4	87.0	0.86	4.4	7.0	14.5	2.7	3.3	0.0075	67	58	52
3	**3.5**		**M3JP/KP**	**100 LB**	3GJP/KP	102 520-••G	1442	86.2	86.7	0.83	6.1	7.0	20	2.7	3.4	0.0081	69	60	52
4	**4.6**		**M3JP/KP**	**112 MC**	3GJP/KP	112 330-••G	1436	85.7	86.0	0.81	8.4	6.9	27	2.9	3.7	0.0093	72	63	52
5.5	**6.3**		**M3JP/KP**	**132 SMB**	3GJP/KP	132 220-••G	1448	87.6	87.9	0.81	11.4	6.7	36	3.1	3.3	0.02	102	93	60
7.5	**8.6**		**M3JP/KP**	**132 SMD**	3GJP/KP	132 240-••G	1447	88.4	88.7	0.81	15.4	6.6	50	3.1	3.4	0.023	108	99	60
11	**12.7**		**M3JP/KP**	**160 MLC**	3GJP/KP	162 430-••G	1470	91.6	91.6	0.82	22.5	7.7	71	3.1	3.6	0.09	172	166	62
15	**17**		**M3JP/KP**	**160 MLE**	3GJP/KP	162 450-••G	1467	92.3	92.3	0.83	30	7.6	98	3.1	3.6	0.121	195	189	62
18.5	**21**		**M3JP/KP**	**180 MLA**	3GJP/KP	182 410-••G	1474	92.7	92.8	0.82	36	7.3	120	2.7	3.2	0.176	212	206	62
22	**25**		**M3JP/KP**	**180 MLB**	3GJP/KP	182 420-••G	1471	92.8	92.9	0.82	42	7.1	143	2.6	3.0	0.191	220	214	62
30	**35**		**M3JP/KP**	**200 MLB**	3GJP/KP	202 420-••G	1475	93.7	93.8	0.84	56	7.4	194	3.3	3.0	0.34	340	320	61
37	**43**		**M3JP/KP**	**225 SMB**	3GJP/KP	222 220-••G	1480	93.8	93.6	0.84	69	7.7	239	3.2	2.9	0.42	390	370	67
45	**52**		**M3JP/KP**	**225 SMC**	3GJP/KP	222 230-••G	1477	94.6	94.6	0.86	81	7.4	291	3.2	2.7	0.49	425	405	67
55	**63**		**M3JP/KP**	**250 SMA**	3GJP/KP	252 210-••G	1479	94.7	94.8	0.83	101	7.2	355	2.5	3.1	0.72	450	430	66
75	**88**		**M3JP/KP**	**280 SMA**	3GJP/KP	282 210-••G	1484	94.9	94.8	0.85	135	6.9	483	2.5	2.8	1.25	725	645	68
90	**105**		**M3JP/KP**	**280 SMB**	3GJP/KP	282 220-••G	1483	95.3	95.3	0.86	159	7.2	580	2.5	2.7	1.5	765	685	68
110	**125**		**M3JP/KP**	**315 SMA**	3GJP/KP	312 210-••G	1487	95.6	95.4	0.86	193	7.2	706	2.0	2.5	2.3	1000	920	70
132	**150**		**M3JP/KP**	**315 SMB**	3GJP/KP	312 220-••G	1487	95.8	95.7	0.86	232	7.1	848	2.3	2.7	2.6	1060	980	70
160	**185**		**M3JP/KP**	**315 SMC**	3GJP/KP	312 230-••G	1487	96.0	95.9	0.85	287	7.2	1028	2.4	2.9	2.9	1100	1020	70
200	**230**		**M3JP/KP**	**315 MLA**	3GJP/KP	312 410-••G	1486	96.2	96.2	0.86	351	7.2	1285	2.5	2.9	3.5	1260	1180	70
250	**288**		**M3JP/KP**	**355 SMA**	3GJP/KP	352 210-••G	1488	96.5	96.4	0.86	438	7.1	1604	2.3	2.7	5.9	1800	1640	74
315	**362**		**M3JP/KP**	**355 SMB**	3GJP/KP	352 220-••G	1488	96.7	96.6	0.86	550	7.3	2022	2.3	2.8	6.9	1970	1810	74
355	**400**		**M3JP/KP**	**355 SMC**	3GJP/KP	352 230-••G	1487	96.7	96.6	0.86	616	6.8	2280	2.4	2.7	7.2	2010	1850	78
400	**450**		**M3JP/KP**	**355 MLA**	3GJP/KP	352 410-••G	1489	96.9	96.7	0.85	700	6.8	2565	2.3	2.6	8.4	2330	2170	78
450	**500**		**M3JP/KP**	**355 MLB**	3GJP/KP	352 420-••G	1490	96.9	96.7	0.86	784	6.9	2884	2.3	2.9	8.4	2330	2170	78
500	**575**		**M3JP/KP**	**355 LKA**	3GJP/KP	352 810-••G	1490	97.0	96.9	0.86	875	6.8	3204	2.0	3.0	10	2690	2530	78
560	**630**		**M3JP/KP**	**400 LA**	3GJP/KP	402 510-••G	1491	97.1	97.0	0.85	980	7.4	3587	2.4	3.0	15	3200	0	78
560	**630**		**M3JP/KP**	**400 LKA**	3GJP/KP	402 810-••G	1491	97.1	97.0	0.85	980	7.4	3587	2.4	3.0	15	3200	0	78
630	**710**		**M3JP/KP**	**400 LKB**	3GJP/KP	402 820-••G	1491	97.1	97.0	0.87	1085	7.6	4035	2.2	3.1	16	3580	3420	78
630	**710**		**M3JP/KP**	**400 LB**	3GJP/KP	402 520-••G	1491	97.1	97.0	0.87	1085	7.6	4035	2.2	3.1	16	3580	3420	78
710	**780**	1)	**M3JP/KP**	**400 LKC**	3GJP/KP	402 830-••G	1491	97.2	97.1	0.86	1240	7.6	4547	2.4	3.2	17	3680	3520	78
710	**780**	1)	**M3JP/KP**	**400 LC**	3GJP/KP	402 530-••G	1491	97.2	97.1	0.86	1240	7.6	4547	2.4	3.2	17	3680	3520	78
1500 r/min = 4-poles							**400 V 50 Hz**						**High-output design**						
9.2	**10.6**	1)	**M3JP/KP**	**132 SME**	3GJP/KP	132 250-••G	1422	86.4	87.8	0.84	18.5	5.5	62	2.5	2.7	0.023	108	99	60
18.5	**21**		**M3JP/KP**	**160 MLF**	3GJP/KP	162 460-••G	1469	92.5	92.8	0.83	36.5	8.0	120	3.2	3.6	0.121	195	189	68
22	**25**		**M3JP/KP**	**160 MLG**	3GJP/KP	162 470-••G	1466	92.1	92.2	0.81	44.5	8.2	143	3.3	3.6	0.121	195	189	68
30	**34**	1)	**M3JP/KP**	**180 MLC**	3GJP/KP	182 430-••G	1473	92.5	92.5	0.81	59	7.8	194	3.1	3.4	0.239	239	233	66
37	**43**		**M3JP/KP**	**200 MLC**	3GJP/KP	202 430-••G	1475	93.5	93.5	0.82	70	7.5	239	3.5	3.2	0.34	340	320	73
55	**63**		**M3JP/KP**	**225 SMD**	3GJP/KP	222 240-••G	1476	94.2	94.1	0.85	100	7.6	356	3.4	2.8	0.49	425	405	74
62	**67**	4) 5)	**M3JP/KP**	**225 SME**	3GJP/KP	222 250-••G	1477	94.1	94.0	0.84	114	7.7	401	3.5	2.9	0.55	445	425	74
75	**84**		**M3JP/KP**	**250 SMB**	3GJP/KP	252 220-••G	1476	94.8	95.0	0.86	133	7.6	485	2.8	3.2	0.88	505	485	73
86	**98**	4)	**M3JP/KP**	**250 SMC**	3GJP/KP	252 230-••G	1477	95.0	95.1	0.85	155	7.8	556	2.9	3.5	0.98	530	510	74
110	**125**		**M3JP/KP**	**280 SMC**	3GJP/KP	282 230-••G	1485	95.7	95.7	0.86	195	7.6	707	3.0	3.0	1.85	825	745	68

1) Temperature rise class F.
2) -3dB(A) sound pressure level reduction with unidirectional fan construction. Direction of rotation must be stated when ordering, see variant codes 044 and 045.
3) Unidirectional fan construction as standard. Direction of rotation must be stated when ordering, see variant codes 044 and 045.
4) The output exceeds one step higher output than the basic with rated output acc. to CENELEC.
5) For 400-415 V 50 Hz (380 V 50 Hz voltage code B).

Flameproof motors Ex d/Ex de IIB/IIC T4

Technical data for totally enclosed squirrel cage three phase motors

ATEX Certified

IP 55, IC 411; Insulation class F, temperature rise class B

Output kW 50 Hz	Output kW 60 Hz	Motor type		Product code		Speed r/min	Efficiency at FL 100%	Efficiency at 3/4 75%	Power factor cos ϕ	Current I_N A	Current I_s/I_N	Torque T_N Nm	Torque T_s/T_N	Torque T_{max}/T_N	Moment of inertia J=1/4GD² kgm²	Weight Ex d kg	Weight Ex de kg	Sound pressure level LP dB(A)
1000 r/min = 6-poles						**400 V 50 Hz**									**Basic design**			
0.37	**0.44**	**M3JP/KP**	**80 MA**	3GJP/KP	083 310-••G	953	67.2	66.3	0.62	1.32	4.8	3.7	3.4	3.6	0.0022	38	29	50
0.55	**0.66**	**M3JP/KP**	**80 MB**	3GJP/KP	083 320-••G	938	67.9	66.4	0.68	1.79	4.3	5.6	2.8	2.9	0.0022	38	29	50
0.75	**0.9**	**M3JP/KP**	**90 SLA**	3GJP/KP	093 010-••G	942	74.0	73.1	0.69	2.17	4.5	7.6	2.8	3.2	0.0036	50	41	44
1.1	**1.3**	**M3JP/KP**	**90 SLC**	3GJP/KP	093 030-••G	940	75.6	74.5	0.67	3.25	4.6	11	3.1	3.4	0.0037	52	43	44
1.5	**1.7**	**M3JP/KP**	**100 LA**	3GJP/KP	103 510-••G	951	81.2	80.9	0.74	3.7	4.2	15	2.3	2.9	0.012	66	57	54
2.2	**2.5**	**M3JP/KP**	**112 MB**	3GJP/KP	113 320-••G	950	81.8	82.0	0.76	5.2	5.9	22	2.2	2.8	0.014	69	60	54
3	**3.5**	**M3JP/KP**	**132 SMB**	3GJP/KP	133 220-••G	961	83.2	82.2	0.77	6.9	6.1	30	2.1	3.0	0.032	102	93	57
4	**4.6**	**M3JP/KP**	**132 SMC**	3GJP/KP	133 230-••G	967	85.6	85.3	0.74	9.3	6.6	39.5	2.3	3.4	0.034	104	95	57
5.5	**6.3**	**M3JP/KP**	**132 SMD**	3GJP/KP	133 240-••G	958	85.5	85.6	0.76	12.5	6.7	55	2.2	3.0	0.036	106	97	57
7.5	**8.6**	**M3JP/KP**	**160 MLA**	3GJP/KP	163 410-••G	965	89.0	89.7	0.81	15.5	6.5	74	1.9	3.0	0.088	166	160	57
11	**12.5**	**M3JP/KP**	**160 MLB**	3GJP/KP	163 420-••G	965	89.6	90.3	0.8	23	7.1	109	2.1	3.3	0.106	179	173	65
15	**17**	**M3JP/KP**	**180 MLB**	3GJP/KP	183 420-••G	972	91.4	91.6	0.81	31	7.0	147	1.9	3.3	0.221	239	233	58
18.5	**21**	**M3JP/KP**	**200 MLA**	3GJP/KP	203 410-••G	983	91.6	91.7	0.81	37	7.1	180	3.2	3.1	0.37	300	280	66
22	**25**	**M3JP/KP**	**200 MLB**	3GJP/KP	203 420-••G	983	91.9	91.9	0.81	43	7.5	214	3.2	3.2	0.43	320	300	61
30	**35**	**M3JP/KP**	**225 SMB**	3GJP/KP	223 220-••G	985	93.0	93.0	0.81	58	7.4	291	3.4	3.0	0.64	385	365	61
37	**43**	**M3JP/KP**	**250 SMA**	3GJP/KP	253 210-••G	987	93.6	93.6	0.81	71	7.2	358	3.2	2.9	1.16	455	435	66
45	**55**	**M3JP/KP**	**280 SMA**	3GJP/KP	283 210-••G	990	94.4	94.3	0.84	82	7.0	434	2.5	2.5	1.85	705	625	66
55	**63**	**M3JP/KP**	**280 SMB**	3GJP/KP	283 220-••G	990	94.6	94.6	0.84	101	7.0	531	2.7	2.6	2.2	745	665	66
75	**86**	**M3JP/KP**	**315 SMA**	3GJP/KP	313 210-••G	992	95.0	94.7	0.82	141	7.4	722	2.4	2.8	3.2	930	850	70
90	**105**	**M3JP/KP**	**315 SMB**	3GJP/KP	313 220-••G	992	95.5	95.3	0.84	163	7.5	866	2.4	2.8	4.1	1030	950	70
110	**125**	**M3JP/KP**	**315 SMC**	3GJP/KP	313 230-••G	991	95.6	95.5	0.83	202	7.4	1060	2.5	2.9	4.9	1100	1020	70
132	**150**	**M3JP/KP**	**315 MLA**	3GJP/KP	313 410-••G	991	95.8	95.7	0.83	240	7.5	1272	2.7	3.0	5.8	1250	1170	68
160	**195**	**M3JP/KP**	**355 SMA**	3GJP/KP	353 210-••G	993	96.0	95.8	0.83	293	7.0	1539	2.0	2.6	7.9	1630	1550	75
200	**230**	**M3JP/KP**	**355 SMB**	3GJP/KP	353 220-••G	993	96.2	96.1	0.84	357	7.2	1923	2.2	2.7	9.7	1790	1710	75
250	**300**	**M3JP/KP**	**355 SMC**	3GJP/KP	353 230-••G	993	96.5	96.3	0.83	450	7.4	2404	2.6	2.9	11.3	2010	1850	75
315	**360**	**M3JP/KP**	**355 MLB**	3GJP/KP	353 420-••G	992	96.4	96.3	0.83	570	7.0	3032	2.5	2.7	13.5	2370	2210	75
355	**400**	**M3JP/KP**	**355 LKA**	3GJP/KP	353 810-••G	992	96.6	96.5	0.83	640	7.6	3417	2.7	2.9	15.5	2690	2530	75
400	**450**	**M3JP/KP**	**400 LKA**	3GJP/KP	403 810-••G	993	96.7	96.6	0.82	730	7.1	3847	2.3	2.7	17	3180	3020	76
400	**450**	**M3JP/KP**	**400 LA**	3GJP/KP	403 510-••G	993	96.7	96.6	0.82	730	7.1	3847	2.3	2.7	17	3180	3020	76
450	**510**	**M3JP/KP**	**400 LKB**	3GJP/KP	403 820-••G	994	96.9	96.7	0.82	818	7.4	4323	2.4	2.8	20.5	3430	3270	76
450	**510**	**M3JP/KP**	**400 LB**	3GJP/KP	403 520-••G	994	96.9	96.7	0.82	818	7.4	4323	2.4	2.8	20.5	3430	3270	76
500	**560**	**M3JP/KP**	**400 LC**	3GJP/KP	403 530-••G	993	96.9	96.8	0.83	900	7.2	4808	2.5	2.7	22	3580	3420	76
500	**560**	**M3JP/KP**	**400 LKC**	3GJP/KP	403 830-••G	993	96.9	96.8	0.83	900	7.2	4808	2.5	2.7	22	3580	3420	76
560	**630**	**M3JP/KP**	**400 LD**	3GJP/KP	403 540-••G	993	96.9	96.8	0.85	985	7.4	5385	2.4	3.0	24	3680	3520	77
560	**630**	**M3JP/KP**	**400 LKD**	3GJP/KP	403 840-••G	993	96.9	96.8	0.85	985	7.4	5385	2.4	3.0	24	3680	3520	77
1000 r/min = 6-poles						**400 V 50 Hz**									**High-output design**			
14	**16.1** [1) 2)]	**M3JP/KP**	**160 MLC**	3GJP/KP	163 430-••G	969	89.3	89.3	0.75	31	7.9	138	2.8	3.9	0.121	194	188	64
18.5	**21**	**M3JP/KP**	**180 MLC**	3GJP/KP	183 430-••G	975	90.4	90.1	0.74	41	7.2	181	2.0	3.2	0.221	239	233	61
30	**35**	**M3JP/KP**	**200 MLC**	3GJP/KP	203 430-••G	983	91.9	91.8	0.81	60	7.5	292	3.5	3.4	0.49	340	320	65
37	**43**	**M3JP/KP**	**225 SMC**	3GJP/KP	223 230-••G	983	93.0	93.1	0.83	70	7.1	359	3.0	2.8	0.75	415	395	64
45	**52**	**M3JP/KP**	**250 SMB**	3GJP/KP	253 220-••G	986	93.9	93.9	0.82	85	7.2	436	3.3	2.8	1.49	500	480	65
75	**86**	**M3JP/KP**	**280 SMC**	3GJP/KP	283 230-••G	990	95.1	95.2	0.84	137	7.3	723	2.8	2.7	2.85	825	745	66

Notes:

When ordering IIC motors, following variant code has to be added: 461 = Ex d, Ex de design, Group IIC

Values above are given for 400 V 50 Hz; data for other voltages, frequencies, ambient temperatures and surface temperature T5 on request.

Flameproof motors Ex d/Ex de IIB/IIC T4

Technical data for totally enclosed squirrel cage three phase motors

ATEX Certified

IP 55, IC 411; Insulation class F, temperature rise class B

Output kW 50 Hz	Output kW 60 Hz	Motor type		Product code		Speed r/min	Efficiency at FL 100%	Efficiency at 3/4 75%	Power factor cos ϕ	Current I_N A	Current I_s/I_N	Torque T_N Nm	Torque T_s/T_N	Torque T_{max}/T_N	Moment of inertia J=1/4GD² kgm²	Weight Ex d kg	Weight Ex de	Sound pressure level LP dB(A)
750 r/min = 8-poles						**400 V 50 Hz**									**Basic design**			
0.18	**0.22**	**M3JP/KP**	**80 MA**	3GJP/KP	084 310-••G	720	54.0	49.0	0.48	1.08	3.3	2.4	3.7	4.0	0.0022	38	29	36
0.25	**0.3**	**M3JP/KP**	**80 MB**	3GJP/KP	084 320-••G	705	58.0	54.6	0.58	1.15	3.2	3.4	2.6	2.8	0.0022	38	29	36
0.37	**0.44**	**M3JP/KP**	**90 SLA**	3GJP/KP	094 010-••G	696	65.2	63.8	0.63	1.34	3.0	5.1	2.0	2.2	0.0036	50	41	36
0.55	**0.66**	**M3JP/KP**	**90 SLC**	3GJP/KP	094 030-••G	695	66.6	64.8	0.61	2.05	3.1	7.6	2.2	2.4	0.0037	52	43	36
0.75	**0.9**	**M3JP/KP**	**100 LA**	3GJP/KP	104 510-••G	720	74.7	72.4	0.59	2.6	3.8	10	2.0	2.9	0.012	66	57	54
1.1	**1.3**	**M3JP/KP**	**100 LB**	3GJP/KP	104 520-••G	717	75.2	73.0	0.57	3.9	3.7	15	2.1	2.9	0.012	66	57	54
1.5	**1.7**	**M3JP/KP**	**112 MC**	3GJP/KP	114 330-••G	713	75.7	73.8	0.59	5	3.5	20	2.0	2.7	0.014	70	61	54
2.2	**2.5**	**M3JP/KP**	**132 SMC**	3GJP/KP	134 230-••G	720	79.6	78.6	0.65	6.3	4.7	29	2.0	2.9	0.034	104	95	59
3	**3.5**	**M3JP/KP**	**132 SMD**	3GJP/KP	134 240-••G	710	80.2	80.4	0.70	8	4.1	40	1.7	2.3	0.036	106	97	59
4	**4.6**	**M3JP/KP**	**160 MLA**	3GJP/KP	164 410-••G	717	83.7	83.8	0.71	10.1	5.2	53	1.8	2.8	0.071	152	146	59
5.5	**6.3**	**M3JP/KP**	**160 MLB**	3GJP/KP	164 420-••G	715	84.7	85.2	0.71	13.9	5.2	73	1.9	2.8	0.09	166	160	53
7.5	**8.6**	**M3JP/KP**	**160 MLC**	3GJP/KP	164 430-••G	718	86.9	87.6	0.70	18.4	5.7	100	2.1	3.1	0.121	194	188	55
11	**12.7**	**M3JP/KP**	**180 MLB**	3GJP/KP	184 420-••G	724	90.3	90.4	0.73	24.5	5.7	145	1.7	2.7	0.239	233	227	63
15	**17**	**M3JP/KP**	**200 MLA**	3GJP/KP	204 410-••G	734	90.7	90.8	0.79	31	7.0	195	2.4	3.2	0.45	315	295	56
18.5	**21**	**M3JP/KP**	**225 SMA**	3GJP/KP	224 210-••G	734	90.8	90.8	0.74	41	6.1	241	2.2	3.0	0.61	370	350	55
22	**25**	**M3JP/KP**	**225 SMB**	3GJP/KP	224 220-••G	732	91.0	91.3	0.77	46	6.5	287	2.2	2.9	0.68	385	365	56
30	**35**	**M3JP/KP**	**250 SMA**	3GJP/KP	254 210-••G	735	92.3	92.4	0.79	61	6.7	390	2.0	2.9	1.25	455	435	56
37	**43**	**M3JP/KP**	**280 SMA**	3GJP/KP	284 210-••G	741	93.4	93.3	0.78	74	7.3	477	1.7	3.0	1.85	705	625	65
45	**55**	**M3JP/KP**	**280 SMB**	3GJP/KP	284 220-••G	741	94.1	93.8	0.78	90	7.6	580	1.8	3.1	2.2	745	665	65
55	**63**	**M3JP/KP**	**315 SMA**	3GJP/KP	314 210-••G	742	94.1	94.0	0.81	104	7.1	708	1.6	2.7	3.2	930	850	62
75	**85**	**M3JP/KP**	**315 SMB**	3GJP/KP	314 220-••G	741	94.5	94.4	0.82	141	7.1	968	1.7	2.7	4.1	1030	950	62
90	**105**	**M3JP/KP**	**315 SMC**	3GJP/KP	314 230-••G	741	94.8	94.7	0.82	167	7.4	1161	1.8	2.7	4.9	1100	1020	64
110	**125**	**M3JP/KP**	**315 MLA**	3GJP/KP	314 410-••G	740	95.0	95.0	0.83	203	7.3	1420	1.8	2.7	5.8	1250	1170	72
132	**155**	**M3JP/KP**	**355 SMA**	3GJP/KP	354 210-••G	744	95.7	95.6	0.80	250	7.5	1694	1.5	2.6	7.9	1630	1550	69
160	**185**	**M3JP/KP**	**355 SMB**	3GJP/KP	354 220-••G	744	95.7	95.6	0.80	305	7.6	2054	1.6	2.6	9.7	1790	1710	69
200	**230**	**M3JP/KP**	**355 SMC**	3GJP/KP	354 230-••G	743	95.7	95.6	0.80	378	7.4	2570	1.6	2.6	11.3	1930	1850	69
250	**285**	**M3JP/KP**	**355 MLB**	3GJP/KP	354 420-••G	743	95.9	95.8	0.80	476	7.5	3213	1.6	2.7	13.5	2370	2210	72
315	**360**	**M3JP/KP**	**400 LA**	3GJP/KP	404 510-••G	744	96.4	96.3	0.81	582	7.0	4043	1.2	2.6	17	3180	3020	71
315	**360**	**M3JP/KP**	**400 LKA**	3GJP/KP	404 810-••G	744	96.4	96.3	0.81	582	7.0	4043	1.2	2.6	17	3180	3020	71
355	**400**	**M3JP/KP**	**400 LB**	3GJP/KP	404 520-••G	743	96.5	96.5	0.83	640	6.8	4563	1.2	2.5	21	3480	3320	71
355	**400**	**M3JP/KP**	**400 LKB**	3GJP/KP	404 820-••G	743	96.5	96.5	0.83	640	6.8	4563	1.2	2.5	21	3480	3320	71
400	**450**	**M3JP/KP**	**400 LKC**	3GJP/KP	404 830-••G	744	96.6	96.5	0.82	735	7.4	5134	1.3	2.7	24	3680	3520	71
400	**450**	**M3JP/KP**	**400 LC**	3GJP/KP	404 530-••G	744	96.6	96.5	0.82	735	7.4	5134	1.3	2.7	24	3680	3520	71
750 r/min = 8-poles						**400 V 50 Hz**									**High-output design**			
18.5	**21**	**M3JP/KP**	**200 MLB**	3GJP/KP	204 420-••G	734	90.6	90.8	0.8	37.5	6.9	241	2.2	3.2	0.54	335	315	57
30	**34** [1]	**M3JP/KP**	**225 SMC**	3GJP/KP	224 230-••G	731	90.6	91.0	0.77	63	6.3	392	2.3	3.0	0.75	410	390	59
37	**43**	**M3JP/KP**	**250 SMB**	3GJP/KP	254 220-••G	737	93.0	92.9	0.78	75	7.5	479	2.3	3.4	1.52	500	480	59
55	**65**	**M3JP/KP**	**280 SMC**	3GJP/KP	284 230-••G	741	94.4	94.3	0.8	105	7.9	709	1.9	3.1	2.85	825	745	65

[1] Temperature rise class F.
[2] Nominal power lower than CENELEC+1.

Flameproof motors Ex d/Ex de IIB/IIC T4

Technical data for totally enclosed squirrel cage three phase motors, two-speed

ATEX Certified

IP 55, IC 411; Insulation class F, temperature rise class F

Output kW 50 Hz	Motor type		Product code		Speed r/min	Current I_N A	Weight Ex d kg
3000/1500 r/min = 2/4 poles Fan drive, two separate windings							**400 V 50 Hz**
84/12	**M3JP/KP**	**280 SMB**	3GJP/KP	288 221-••G	2980/1492	147/26	765
100/15	**M3JP/KP**	**315 SMC**	3GJP/KP	288 231-••G	2974/1492	169/32	825
125/18	**M3JP/KP**	**315 SMB**	3GJP/KP	318 221-••G	2983/1493	220/39	1040
150/22	**M3JP/KP**	**315 SMC**	3GJP/KP	318 231-••G	2976/1492	257/47	1125
190/27	**M3JP/KP**	**355 MLA**	3GJP/KP	318 411-••G	2981/1492	322/57	1290
220/30	**M3JP/KP**	**355 SMA**	3GJP/KP	358 211-••G	2982/1491	370/61	1790
350/45	**M3JP/KP**	**355 MLA**	3GJP/KP	358 411-••G	2982/1493	600/102	2190
3000/1500 r/min = 2-4 poles Fan drive, Dahlander-connection							**400 V 50 Hz**
0.95/0.2	**M3JP/KP**	**80 MB**	3GJP/KP	088 328-••G	2804/1407	2.08/0.5	38
1.4/0.3	**M3JP/KP**	**90 SLA**	3GJP/KP	098 018-••G	2893/1451	2.8/0.79	51
1.9/0.4	**M3JP/KP**	**90 SLC**	3GJP/KP	098 038-••G	2886/1450	3.8/0.9	53
3/0.6	**M3JP/KP**	**100 SLC**	3GJP/KP	108 528-••G	2873/1459	5.8/1.2	69
3.7/0.75	**M3JP/KP**	**112 LA**	3GJP/KP	118 328-••G	2863/1453	7.0/1.5	72
6.2/1.3	**M3JP/KP**	**132 MB**	3GJP/KP	138 228-••G	2920/1468	12.4/2.9	102
8.3/1.7	**M3JP/KP**	**132 SMB**	3GJP/KP	138 248-••G	2898/1454	15.6/3.5	108
11/2.5	**M3JP/KP**	**160 MLB**	3GJP/KP	168 428-••G	2935/1471	20/4.9	172
14/3	**M3JP/KP**	**160 MLC**	3GJP/KP	168 438-••G	2931/1473	25.5/5.9	172
18.5/4	**M3JP/KP**	**160 MLE**	3GJP/KP	168 458-••G	2941/1473	33/7.9	195
22/5	**M3JP/KP**	**180 MLB**	3GJP/KP	188 428-••G	2959/1481	40/9.8	220
25/5.5	**M3JP/KP**	**180 MLC**	3GJP/KP	188 438-••G	2952/1480	44/10.5	239
34/8	**M3JP/KP**	**200 MLC**	3GJP/KP	208 438-••G	2951/1478	61/18	340
37/10	**M3JP/KP**	**200 MLE**	3GJP/KP	208 458-••G	2941/1469	66/23	345
40/11	**M3JP/KP**	**225 SMB**	3GJP/KP	228 228-••G	2964/1480	69/23.5	400
50/14	**M3JP/KP**	**225 SMC**	3GJP/KP	228 238-••G	2962/1479	87/29.5	420
60/15.5	**M3JP/KP**	**250 SMB**	3GJP/KP	258 228-••G	2959/1480	104/33	500
70/20	**M3JP/KP**	**250 SMC**	3GJP/KP	258 238-••G	2966/1482	120/41	510
90/30	**M3JP/KP**	**280 SMB**	3GJP/KP	288 228-••G	2965/1484	153/54	765
105/33	**M3JP/KP**	**280 SMC**	3GJP/KP	288 238-••G	2966/1483	186/60	825
125/25	**M3JP/KP**	**315 SMB**	3GJP/KP	318 228-••G	2972/1490	217/53	1040
175/45	**M3JP/KP**	**315 MLA**	3GJP/KP	318 418-••G	2980/1492	287/81	1260
260/65	**M3JP/KP**	**355 SMB**	3GJP/KP	358 228-••G	2983/1491	450/140	1870
320/80	**M3JP/KP**	**355 MLA**	3GJP/KP	358 418-••G	2983/1492	540/160	2190
400/100	**M3JP/KP**	**355 LKA**	3GJP/KP	358 818-••G	2983/1492	670/200	2510

[1] On request

Notes:

When ordering IIC motors, following variant code has to be added: 461 = Ex d, Ex de design, Group IIC.

The two bullets in the product code indicate choice of mounting arrangement, voltage and frequency (see ordering information).

Detailed technical data on request.

Flameproof motors Ex d/Ex de IIB/IIC T4

Technical data for totally enclosed squirrel cage three phase motors, two-speed

ATEX Certified

IP 55, IC 411; Insulation class F, temperature rise class F

Output kW 50 Hz	Motor type		Product code		Speed r/min	Current I_N A	Weight Ex d kg
1500/1000 r/min = 4/6 poles Fan drive, two separate windings							**400 V 50 Hz**
0.95/0.28	**M3JP/KP**	**90 SLA**	3GJP/KP	098 014-••G	1)	1)	1)
1.25/0.4	**M3JP/KP**	**90 SLC**	3GJP/KP	098 034-••G	1440/956	3.1/1.38	53
1.8/0.55	**M3JP/KP**	**100 LA**	3GJP/KP	108 514-••G	1443/969	3.8/1.7	67
2.2/0.7	**M3JP/KP**	**100 LB**	3GJP/KP	108 524-••G	1450/972	4.6/2.1	69
2.6/0.8	**M3JP/KP**	**112 MC**	3GJP/KP	118 334-••G	1)	1)	1)
4.5/1.5	**M3JP/KP**	**132 SMC**	3GJP/KP	138 234-••G	1)	1)	1)
6/2	**M3JP/KP**	**132 SMD**	3GJP/KP	138 224-••G	1465/965	14.1/5.4	108
11/3.7	**M3JP/KP**	**160 MLC**	3GJP/KP	168 434-••G	1467/973	22/9	172
15/4.7	**M3JP/KP**	**160 MLE**	3GJP/KP	168 454-••G	1465/972	29.5/11.5	195
18.5/5.8	**M3JP/KP**	**180 MLC**	3GJP/KP	188 434-••G	1476/984	35/15.2	239
21/6.6	**M3JP/KP**	**200 MLB**	3GJP/KP	208 424-••G	1477/990	38/14	320
26/8	**M3JP/KP**	**200 MLC**	3GJP/KP	208 434-••G	1474/987	46/16.5	340
31/10	**M3JP/KP**	**225 SMB**	3GJP/KP	228 224-••G	1481/991	55/21.5	385
40/12.5	**M3JP/KP**	**225 SMC**	3GJP/KP	228 234-••G	1481/990	71/26	415
54/17	**M3JP/KP**	**250 SMB**	3GJP/KP	258 224-••G	1480/987	97/38	505
63/19	**M3JP/KP**	**250 SMC**	3GJP/KP	258 234-••G	1478/987	114/42	530
85/27	**M3JP/KP**	**280 SMB**	3GJP/KP	288 224-••G	1487/992	160/59	765
100/30	**M3JP/KP**	**280 SMC**	3GJP/KP	288 234-••G	1486/991	180/62	825
120/36	**M3JP/KP**	**315 SMB**	3GJP/KP	318 224-••G	1487/991	212/72	1060
145/43	**M3JP/KP**	**315 SMC**	3GJP/KP	318 234-••G	1487/991	256/86	1100
180/54	**M3JP/KP**	**315 MLA**	3GJP/KP	318 414-••G	1484/990	321/109	1260
220/65	**M3JP/KP**	**355 SMA**	3GJP/KP	358 214-••G	1489/991	390/131	1800
300/90	**M3JP/KP**	**355 SMC**	3GJP/KP	358 234-••G	1488/991	525/183	2010
390/110	**M3JP/KP**	**355 MLB**	3GJP/KP	358 424-••G	1490/992	700/221	2330
1500/750 r/min = 4/8 poles Fan drive, two separate windings							**400 V 50 Hz**
85/12	**M3JP/KP**	**280 SMB**	3GJP/KP	288 222-••G	1487/744	160/34	765
100/15	**M3JP/KP**	**280 SMC**	3GJP/KP	288 232-••G	1486/744	180/40	825
120/18	**M3JP/KP**	**315 SMB**	3GJP/KP	318 222-••G	1487/744	212/41	1060
145/19	**M3JP/KP**	**315 SMC**	3GJP/KP	318 232-••G	1487/744	256/48	1100
180/23	**M3JP/KP**	**315 MLA**	3GJP/KP	318 412-••G	1484/743	321/58	1260
220/28	**M3JP/KP**	**355 SMA**	3GJP/KP	358 212-••G	1489/744	390/70	1800
300/38	**M3JP/KP**	**355 SMC**	3GJP/KP	358 232-••G	1488/745	525/96	2010
390/50	**M3JP/KP**	**355 MLB**	3GJP/KP	358 422-••G	1490/744	700/123	2330

1) On request

Notes:

When ordering IIC motors, following variant code has to be added: 461 = Ex d, Ex de design, Group IIC.

The two bullets in the product code indicate choice of mounting arrangement, voltage and frequency (see ordering information).

Detailed technical data on request.

Flameproof motors Ex d/Ex de IIB/IIC T4

Technical data for totally enclosed squirrel cage three phase motors, two-speed

ATEX Certified

IP 55, IC 411; Insulation class F, temperature rise class F

Output kW 50 Hz	Motor type		Product code		Speed r/min	Current I_N A	Weight Ex d kg
1500/750 r/min = 4-8 poles Fan drive, Dahlander-connection							**400 V 50 Hz**
0.6/0.11	M3JP/KP	80 MB	3GJP/KP	088 329-••G	1433/706	1.74/0.63	38
1/0,23	M3JP/KP	90 SLA	3GJP/KP	098 019-••G	1441/711	2.6/1.2	51
1.5/0.31	M3JP/KP	90 SLC	3GJP/KP	098 039-••G	1428/710	3.5/1.47	53
2/0.45	M3JP/KP	100 LA	3GJP/KP	108 519-••G	1438/715	4/1.5	67
2.4/0.5	M3JP/KP	100 LB	3GJP/KP	108 529-••G	1)	1)	1)
2.9/0.6	M3JP/KP	112 MC	3GJP/KP	118 339-••G	1451/726	6.3/2.4	72
5/1	M3JP/KP	132 SMB	3GJP/KP	138 229-••G	1427/720	9.8/2.8	104
6.8/1.4	M3JP/KP	132 SMD	3GJP/KP	138 249-••G	1458/729	14.3/4.7	106
11/2.5	M3JP/KP	160 MLC	3GJP/KP	168 439-••G	1468/732	22/8.8	172
15/3.5	M3JP/KP	160 MLE	3GJP/KP	168 459-••G	1467/731	29/11	195
18.5/3.7	M3JP/KP	180 MLB	3GJP/KP	188 429-••G	1475/737	36/13.2	220
22/4,4	M3JP/KP	180 MLC	3GJP/KP	188 439-••G	1475/739	43/15.5	239
30/7	M3JP/KP	200 MLB	3GJP/KP	208 429-••G	1478/736	58/21	340
37/10	M3JP/KP	225 SMB	3GJP/KP	228 229-••G	1482/735	70/26.5	390
42/11	M3JP/KP	225 SMC	3GJP/KP	228 239-••G	1480/733	77/28.5	425
50/13	M3JP/KP	225 SME	3GJP/KP	228 259-••G	1478/733	91/33.5	445
60/15	M3JP/KP	250 SMB	3GJP/KP	258 229-••G	1482/738	110/40	505
70/17	M3JP/KP	250 SMC	3GJP/KP	258 239-••G	1482/738	130/46	530
80/18.5	M3JP/KP	280 SMB	3GJP/KP	288 229-••G	1486/743	145/47	765
90/20	M3JP/KP	280 SMC	3GJP/KP	288 239-••G	1486/743	160/50	825
125/28	M3JP/KP	315 SMB	3GJP/KP	318 229-••G	1488/744	226/73	1060
160/37	M3JP/KP	315 MLA	3GJP/KP	318 419-••G	1486/742	283/93	1260
220/50	M3JP/KP	355 SMA	3GJP/KP	358 219-••G	1489/744	395/126	1800
300/70	M3JP/KP	355 SMC	3GJP/KP	358 239-••G	1490/744	536/177	2010
1000/750 r/min = 6/8 poles Fan drive, two separate windings							**400 V 50 Hz**
53/20	M3JP/KP	280 SMB	3GJP/KP	288 226-••G	990/745	99/46	745
70/26	M3JP/KP	280 SMC	3GJP/KP	288 236-••G	992/745	132/58	825
84/36	M3JP/KP	315 SMB	3GJP/KP	318 226-••G	993/745	156/78	1030
103/44	M3JP/KP	315 SMC	3GJP/KP	318 236-••G	993/745	195/94	1100
123/52	M3JP/KP	315 MLA	3GJP/KP	318 416-••G	993/745	230/109	1250
140/60	M3JP/KP	355 SMA	3GJP/KP	358 216-••G	994/745	263/125	1630
180/76	M3JP/KP	355 SMB	3GJP/KP	358 226-••G	994/745	317/157	1790
210/88	M3JP/KP	355 SMC	3GJP/KP	358 236-••G	994/745	390/178	2010
250/105	M3JP/KP	355 MLB	3GJP/KP	358 426-••G	994/744	463/218	2370
315/132	M3JP/KP	355 LKB	3GJP/KP	358 826-••G	993/745	583/290	2790
355/150	M3JP/KP	400 LB	3GJP/KP	408 526-••G	995/745	670/300	3430
355/150	M3JP/KP	400 LKB	3GJP/KP	408 826-••G	995/745	670/300	3430
400/170	M3JP/KP	400 LKD	3GJP/KP	408 546-••G	995/746	740/350	3680
400/170	M3JP/KP	400 LD	3GJP/KP	408 846-••G	995/746	740/350	3680
3000/1500 r/min = 2/4 poles Constant torque, two separate windings							**400 V 50 Hz**
65/33	M3JP/KP	280 SMB	3GJP/KP	289 221-••G	2979/1488	112/67	765
82/41	M3JP/KP	280 SMC	3GJP/KP	289 231-••G	2979/1488	141/81	825
100/50	M3JP/KP	315 SMB	3GJP/KP	319 221-••G	2986/1488	183/101	1040
125/63	M3JP/KP	315 SMC	3GJP/KP	319 231-••G	2980/1490	216/128	1125
155/78	M3JP/KP	315 MLA	3GJP/KP	319 411-••G	2985/1489	267/157	1290
180/90	M3JP/KP	355 SMA	3GJP/KP	359 211-••G	2985/1490	308/175	1790
300/150	M3JP/KP	355 MLA	3GJP/KP	359 411-••G	2985/1491	512/328	2190

1) On request

Notes: When ordering IIC motors, following variant code has to be added: 461 = Ex d, Ex de design, Group IIC.

The two bullets in the product code indicate choice of mounting arrangement, voltage and frequency (see ordering information).

Detailed technical data on request.

Flameproof motors Ex d/Ex de IIB/IIC T4

Technical data for totally enclosed squirrel cage three phase motors, two-speed

ATEX Certified

IP 55, IC 411; Insulation class F, temperature rise class F

Output kW 50 Hz	Motor type		Product code		Speed r/min	Current I_N A	Weight Ex d kg
3000/1500 r/min = 2-4 poles Constant torque, Dahlander-connection							**400 V 50 Hz**
0.95/0.6	M3JP/KP	80 MB	3GJP/KP	089 328-••G	1)	1)	1)
1.1/0.85	M3JP/KP	90 SLA	3GJP/KP	099 018-••G	1)	1)	1)
1.5/1.25	M3JP/KP	90 SLC	3GJP/KP	099 038-••G	1)	1)	1)
2.2/1.75	M3JP/KP	100 LA	3GJP/KP	109 518-••G	1)	1)	1)
2.9/2.25	M3JP/KP	100 LB	3GJP/KP	109 528-••G	2888/1437	5.6/4.5	69
3.6/2.8	M3JP/KP	112 MC	3GJP/KP	119 338-••G	1)	1)	1)
4.7/3.1	M3JP/KP	132 SMB	3GJP/KP	139 228-••G	1)	1)	1)
7.2/4.8	M3JP/KP	132 SMD	3GJP/KP	139 248-••G	2920/1459	13.6/10.2	108
11/8	M3JP/KP	160 MLB	3GJP/KP	169 428-••G	2935/1466	20/15.3	172
14/10.5	M3JP/KP	160 MLC	3GJP/KP	169 438-••G	2931/1459	25.5/21	172
18.5/14	M3JP/KP	160 MLE	3GJP/KP	169 458-••G	2941/1460	33/27	195
22/16.5	M3JP/KP	180 MLB	3GJP/KP	189 428-••G	2959/1474	40/32	220
25/18.5	M3JP/KP	180 MLC	3GJP/KP	189 438-••G	2952/1472	44/35	239
31/22	M3JP/KP	200 MLB	3GJP/KP	209 428-••G	2952/1474	53/43	340
38/25	M3JP/KP	225 SMB	3GJP/KP	229 228-••G	2958/1477	67/55	400
45/29	M3JP/KP	225 SMC	3GJP/KP	229 238-••G	2950/1477	79/63	420
50/40	M3JP/KP	250 SMB	3GJP/KP	259 228-••G	2960/1482	83/71	505
75/55	M3JP/KP	250 SMC	3GJP/KP	259 238-••G	2972/1486	127/102	530
90/65	M3JP/KP	280 SMB	3GJP/KP	289 228-••G	2965/1488	153/117	765
105/75	M3JP/KP	280 SMC	3GJP/KP	289 238-••G	2966/1486	186/136	825
125/85	M3JP/KP	315 SMB	3GJP/KP	319 228-••G	2972/1485	217/178	1040
175/120	M3JP/KP	315 MLA	3GJP/KP	319 418-••G	2980/1491	287/223	1260
250/160	M3JP/KP	355 SMC	3GJP/KP	359 238-••G	2982/1491	430/383	1940
310/200	M3JP/KP	355 MLB	3GJP/KP	359 428-••G	2983/1491	510/425	2270
380/250	M3JP/KP	355 LKB	3GJP/KP	359 828-••G	2982/1490	630/515	2650
1500/1000 r/min = 4/6 poles Constant torque, two separate windings							**400 V 50 Hz**
0.8/0.5	M3JP/KP	90 SLA	3GJP/KP	099 014-••G	1)	1)	1)
1.0/0.6	M3JP/KP	90 SLC	3GJP/KP	099 034-••G	1)	1)	1)
1.5/0.9	M3JP/KP	100 LA	3GJP/KP	109 514-••G	1)	1)	1)
1.8/1.0	M3JP/KP	100 LB	3GJP/KP	109 524-••G	1)	1)	1)
2.2/1.2	M3JP/KP	112 MC	3GJP/KP	119 334-••G	1)	1)	1)
3.3/2.2	M3JP/KP	132 SMC	3GJP/KP	139 234-••G	1462/964	7.6/6.2	102
4.5/3.0	M3JP/KP	132 SMD	3GJP/KP	139 244-••G	1)	1)	1)
7.5/5.5	M3JP/KP	160 MLC	3GJP/KP	169 434-••G	1474/972	15.2/13	172
11/7.7	M3JP/KP	160 MLE	3GJP/KP	169 454-••G	1470/971	22/18	195
14/9.5	M3JP/KP	180 MLC	3GJP/KP	189 434-••G	1479/984	27.5/24	239
18.5/13	M3JP/KP	200 MLB	3GJP/KP	209 424-••G	1481/985	34/26	320
22/15	M3JP/KP	200 MLC	3GJP/KP	209 434-••G	1477/985	40/29	340
28/19	M3JP/KP	225 SMB	3GJP/KP	229 224-••G	1481/985	50/38	385
34/23	M3JP/KP	225 SMC	3GJP/KP	229 234-••G	1485/990	62/46	415
45/30	M3JP/KP	250 SMB	3GJP/KP	259 224-••G	1485/986	85/64	505
55/37	M3JP/KP	250 SMC	3GJP/KP	259 234-••G	1483/984	101/78	530
65/43	M3JP/KP	280 SMB	3GJP/KP	289 224-••G	1485/988	117/87	765
76/50	M3JP/KP	280 SMC	3GJP/KP	289 234-••G	1487/989	137/101	825
90/60	M3JP/KP	315 SMB	3GJP/KP	319 224-••G	1490/991	165/125	1060
110/75	M3JP/KP	315 SMC	3GJP/KP	319 234-••G	1490/992	200/158	1100
140/95	M3JP/KP	315 MLA	3GJP/KP	319 414-••G	1489/990	250/190	1260
180/120	M3JP/KP	355 SMA	3GJP/KP	359 214-••G	1491/992	330/245	1800
250/167	M3JP/KP	355 SMC	3GJP/KP	359 234-••G	1490/991	445/335	2010
330/220	M3JP/KP	355 MLB	3GJP/KP	359 424-••G	1492/992	605/443	2330

1) On request

Flameproof motors Ex d/Ex de IIB/IIC T4

Technical data for totally enclosed squirrel cage three phase motors, two-speed

ATEX Certified

IP 55, IC 411; Insulation class F, temperature rise class F

Output kW 50 Hz	Motor type		Product code		Speed r/min	Current I_N A	Weight Ex d kg
1500/1000 r/min = 4/8 poles Constant torque, two separate windings							**400 V 50 Hz**
60/30	**M3JP/KP**	**280 SMB**	3GJP/KP	289 222-••G	1486/741	110/74	765
74/37	**M3JP/KP**	**280 SMC**	3GJP/KP	289 232-••G	1487/741	132/93	825
90/45	**M3JP/KP**	**315 SMB**	3GJP/KP	319 222-••G	1490/742	165/112	1060
110/55	**M3JP/KP**	**315 SMC**	3GJP/KP	319 232-••G	1490/742	200/139	1100
140/70	**M3JP/KP**	**315 MLA**	3GJP/KP	319 412-••G	1489/742	250/173	1260
180/90	**M3JP/KP**	**355 SMA**	3GJP/KP	359 212-••G	1491/743	330/225	1800
250/115	**M3JP/KP**	**355 SMC**	3GJP/KP	359 232-••G	1490/744	445/293	2010
330/145	**M3JP/KP**	**355 MLB**	3GJP/KP	359 422-••G	1492/743	605/355	2330
1500/750 r/min = 4-8 poles Constant torque, Dahlander-connection							**400 V 50 Hz**
0.45/0.23	**M3JP/KP**	**80 MB**	3GJP/KP	089 329-••G	1)	1)	1)
0.55/0.3	**M3JP/KP**	**90 SLA**	3GJP/KP	099 019-••G	1)	1)	1)
0.75/0.4	**M3JP/KP**	**90 SLC**	3GJP/KP	099 039-••G	1433/712	1.67/2.08	53
1.4/0.7	**M3JP/KP**	**100 LA**	3GJP/KP	109 519-••G	1434/721	2.9/3	67
1.8/0.9	**M3JP/KP**	**100 LB**	3GJP/KP	109 529-••G	1)	1)	1)
2/1.1	**M3JP/KP**	**112 MC**	3GJP/KP	119 339-••G	1447/720	4.1/5.1	72
3.8/1.9	**M3JP/KP**	**132 SMB**	3GJP/KP	139 229-••G	1455/730	7.3/7	104
5/2.5	**M3JP/KP**	**132 SMD**	3GJP/KP	139 249-••G	1438/724	9.7/8.7	106
8/4.5	**M3JP/KP**	**160 MLC**	3GJP/KP	169 439-••G	1456/727	15.5/14.9	172
12/7	**M3JP/KP**	**160 MLE**	3GJP/KP	169 459-••G	1462/727	23/24.5	195
16/8	**M3JP/KP**	**180 MLC**	3GJP/KP	189 439-••G	1464/735	31/28	233
22/13	**M3JP/KP**	**200 MLB**	3GJP/KP	209 429-••G	1476/737	39/30	320
27/16	**M3JP/KP**	**200 MLC**	3GJP/KP	209 439-••G	1473/736	48/35.5	340
34/20	**M3JP/KP**	**225 SMB**	3GJP/KP	229 229-••G	1479/739	60/48	385
37/24	**M3JP/KP**	**225 SMC**	3GJP/KP	229 239-••G	1476/736	64/53	415
45/27	**M3JP/KP**	**225 SMD**	3GJP/KP	229 249-••G	1476/737	79/60	445
52/31	**M3JP/KP**	**250 SMB**	3GJP/KP	259 229-••G	1483/741	90/72	500
65/40	**M3JP/KP**	**280 SMB**	3GJP/KP	289 229-••G	1487/743	116/92	745
85/50	**M3JP/KP**	**280 SMC**	3GJP/KP	289 239-••G	1487/743	149/115	825
95/65	**M3JP/KP**	**315 SMB**	3GJP/KP	319 229-••G	1489/744	166/140	1030
115/80	**M3JP/KP**	**315 SMC**	3GJP/KP	319 239-••G	1489/743	198/167	1100
150/95	**M3JP/KP**	**315 MLA**	3GJP/KP	319 419-••G	1489/744	260/201	1250
200/125	**M3JP/KP**	**355 SMB**	3GJP/KP	359 229-••G	1490/745	340/270	1790
290/185	**M3JP/KP**	**355 MLB**	3GJP/KP	359 429-••G	1490/744	490/390	2370
1000/750 r/min = 6/8 poles Constant torque, two separate windings							**400 V 50 Hz**
47/35	**M3JP/KP**	**280 SMB**	3GJP/KP	289 226-••G	991/744	89/81	745
60/45	**M3JP/KP**	**280 SMC**	3GJP/KP	289 236-••G	992/743	112/100	825
75/56	**M3JP/KP**	**315 SMB**	3GJP/KP	319 226-••G	993/744	142/118	1030
88/66	**M3JP/KP**	**315 SMC**	3GJP/KP	319 236-••G	993/744	165/139	1100
106/80	**M3JP/KP**	**315 MLA**	3GJP/KP	319 416-••G	993/744	198/171	1250
110/83	**M3JP/KP**	**355 SMA**	3GJP/KP	359 216-••G	994/746	204/177	1630
135/100	**M3JP/KP**	**355 SMB**	3GJP/KP	359 226-••G	994/745	250/204	1790
155/116	**M3JP/KP**	**355 SMC**	3GJP/KP	359 236-••G	994/744	288/236	2010
180/135	**M3JP/KP**	**355 MLB**	3GJP/KP	359 426-••G	994/744	340/282	2370
220/165	**M3JP/KP**	**355 LKB**	3GJP/KP	359 826-••G	993/744	410/340	2790

[1] On request

Notes:

When ordering IIC motors, following variant code has to be added: 461 = Ex d, Ex de design, Group IIC.

The two bullets in the product code indicate choice of mounting arrangement, voltage and frequency (see ordering information).

Detailed technical data on request.

Rating plates

The rating plate is in table form giving values for speed, current and power factor for six voltage levels.

European standards require special marking on safety motors. The marking shall include the following:
- type of protection
- equipment group
- temperature class
- name of certifying body
- certificate number

Motor sizes 80-400

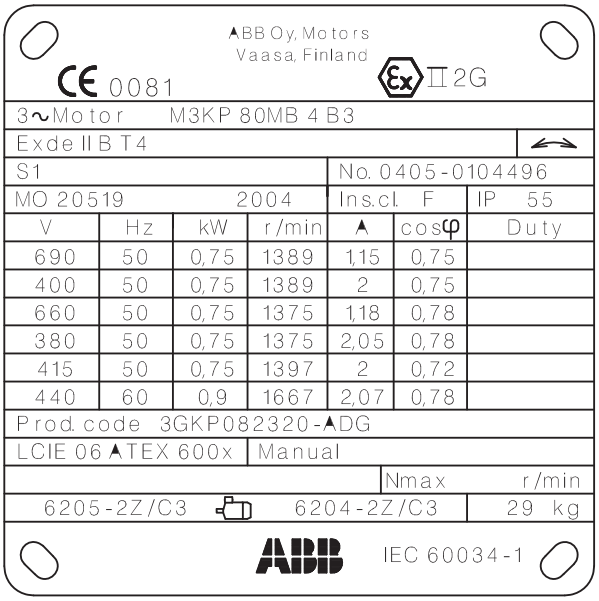

ABB Oy, Motors
Vaasa, Finland

CE 0081 Ex II 2G

3~Motor M3KP 80MB 4 B3						
Exde II B T4						
S1				No. 0405-0104496		
MO 20519			2004	Ins.cl. F		IP 55
V	Hz	kW	r/min	A	cosφ	Duty
690	50	0,75	1389	1,15	0,75	
400	50	0,75	1389	2	0,75	
660	50	0,75	1375	1,18	0,78	
380	50	0,75	1375	2,05	0,78	
415	50	0,75	1397	2	0,72	
440	60	0,9	1667	2,07	0,78	
Prod. code 3GKP082320-ADG						
LCIE 06 ATEX 600x			Manual			
				Nmax		r/min
6205-2Z/C3			6204-2Z/C3			29 kg

ABB IEC 60034-1

M000273

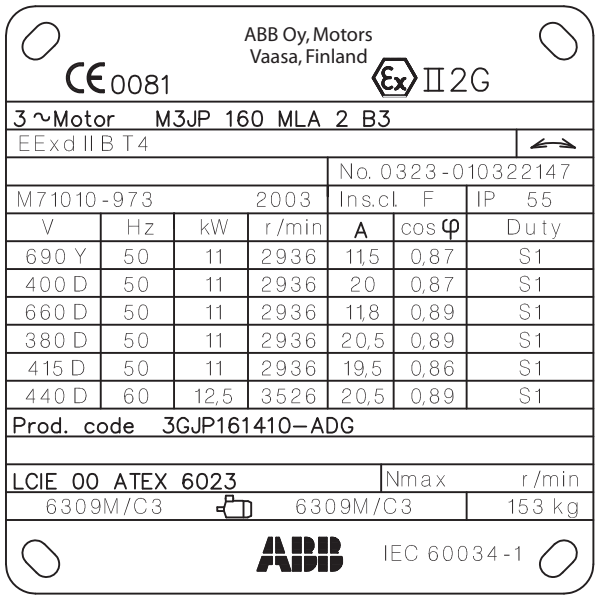

ABB Oy, Motors
Vaasa, Finland

CE 0081 Ex II 2G

3~Motor M3JP 160 MLA 2 B3						
EExd II B T4						
				No. 0323-010322147		
M71010-973			2003	Ins.cl. F		IP 55
V	Hz	kW	r/min	A	cosφ	Duty
690 Y	50	11	2936	11,5	0,87	S1
400 D	50	11	2936	20	0,87	S1
660 D	50	11	2936	11,8	0,89	S1
380 D	50	11	2936	20,5	0,89	S1
415 D	50	11	2936	19,5	0,86	S1
440 D	60	12,5	3526	20,5	0,89	S1
Prod. code 3GJP161410–ADG						
LCIE 00 ATEX 6023				Nmax		r/min
6309M/C3			6309M/C3			153 kg

ABB IEC 60034-1

M000196

Flameproof motors - Variant codes

Code [1] / Variant		80	90	100	112	132	160	180	200	225	250	280	315	355	400
Balancing															
052	Vibration acc. to Grade A (IEC 60034-14).	S	S	S	S	S	S	S	S	S	S	S	S	S	S
417	Vibration acc. to Grade B (IEC 60034-14).	P	P	P	P	P	P	P	P	P	P	P	P	P	P
424	Full key balancing.	P	P	P	P	P	P	P	P	P	P	P	P	P	P
Bearings and Lubrication															
036	Transport lock for bearings.	NA	NA	NA	NA	NA	M	M	M	M	M	P	P	P	P
037	Roller bearing at D-end.	NA	NA	NA	NA	NA	M	M	M	M	M	P	P	NA	NA
040	Heat resistant grease.	S	S	S	S	S	S	S	S	S	S	S	S	S	S
041	Bearings regreasable via grease nipples.	NA	NA	NA	NA	NA	S	S	S	S	S	S	S	S	S
043	SPM nipples.	NA	NA	NA	NA	NA	S	S	S	S	S	S	S	S	S
058	Angular contact bearing at D-end, shaft force away from bearing.	NA	NA	NA	NA	NA	NA	NA	NA	NA	NA	P	P	P	P
107	Pt100 2-wire in bearings.	NA	NA	NA	NA	NA	P	P	P	P	P	P	P	P	P
130	Pt100 3-wire in bearings.	NA	NA	NA	NA	NA	P	P	P	P	P	P	P	P	P
194	2Z bearings greased for life at both ends.	S	S	S	S	S	M	M	M	M	M	NA	NA	NA	NA
433	Outlet grease collector.	NA	NA	NA	NA	NA	NA	NA	NA	NA	NA	P	P	P	P
796	Grease nipples JIS B 1575 PT 1/8 Type A.	NA	NA	NA	NA	NA	P	P	P	P	P	P	P	P	P
797	Stainless steel SPM Nipples.	NA	NA	NA	NA	NA	P	P	P	P	P	P	P	P	P
798	Stainless steel grease nipples.	NA	NA	NA	NA	NA	P	P	P	P	P	P	P	P	P
Brakes															
412	Built-on brake.	NA	NA	NA	NA	NA	R	R	R	R	R	NA	NA	NA	NA
Branch standard designs															
178	Stainless steel / acid proof bolts.	S	S	S	S	S	M	M	M	M	M	P	P	P	P
204	Jacking bolts for foot mounted motors.	NA	NA	NA	NA	NA	P	P	P	P	P	P	P	S	S
209	Non-standard voltage or frequency, (special winding).	P	P	P	P	P	P	P	P	P	P	P	P	P	P
396	Motor designed for ambient temperature -20°C to -40°C, wtih space heaters (code 450/451 must be added).	P	P	P	P	P	P	P	P	P	P	P	P	P	P
397	Motor designed for ambient temperature -40°C to -55°C, wtih space heaters (code 450/451 must be added).	P	P	P	P	P	P	P	P	P	P	P	P	P	P
398	Motor designed for ambient temperature -20°C to -40°C.	P	P	P	P	P	P	P	P	P	P	P	P	P	P
399	Motor designed for ambient temperature -40°C to -55°C	P	P	P	P	P	P	P	P	P	P	P	P	P	P
425	Corrosion protected stator and rotor core.	S	S	S	S	S	S	S	S	S	S	P	P	P	P
786	Special design shaft upwards (V3, V36, V6) for outdoor mounting.	P	P	P	P	P	P	P	P	P	P	R	R	NA	NA
Cooling system															
044	Unidirectional fan for reduced noice level. Rotation clockwise seen from D-end. Available only for 2-pole motors.	NA	NA	NA	NA	NA	NA	NA	NA	NA	NA	P	P	P	S
045	Unidirectional fan for reduced noice level. Rotation counter clockwise seen from D-end. Available only for 2-pole motors.	NA	NA	NA	NA	NA	NA	NA	NA	NA	NA	P	P	P	S
068	Metal fan.	M	M	M	M	M	M	M	M	M	M	M	P	P	P
075	Cooling method IC418 (without fan).	R	R	R	R	R	R	R	R	R	R	R	R	R	NA
183	Separate motor cooling (fan axial, N-end).	NA	NA	NA	NA	NA	P	P	P	P	P	P	P	P	P
422	Separate motor cooling (fan top or side, N-end).	NA	NA	NA	NA	NA	NA	NA	NA	NA	NA	P	P	P	P
791	Stainless steel fan cover.	NA	NA	NA	NA	NA	NA	NA	NA	P	P	P	P	P	P
Coupling															
035	Assembly of customer supplied coupling-half.	NA	NA	NA	NA	NA	P	P	P	P	P	P	P	P	P

[1] Certain variant codes cannot be used simultaneously.

S = Included as standard.
M = On modification of a stocked motor, or on new manufacture, the number per order may be limited.
P = New manufacture only.
R = On request.
NA = Not applicable

Code [1] / Variant		80	90	100	112	132	160	180	200	225	250	280	315	355	400
Documentation															
141	Binding dimension drawing.	M	M	M	M	M	M	M	M	M	M	M	M	M	M
Drain holes															
448	Draining holes with metal plugs.	NA	NA	NA	NA	NA	P	P	P	P	P	P	P	P	P
Hazardous Environments															
452	DIP/Ex tD acc. to ATEX directive 94/9/EC , T= 125 °C, cat. 3D, IP55.	M	M	M	M	M	M	M	M	M	M	M	P	P	P
453	DIP/Ex tD acc. to ATEX directive 94/9/EC , T= 125 °C, cat. 2D, IP65.	M	M	M	M	M	M	M	M	M	M	M	P	P	P
454	DIP/Ex tD acc. to ATEX directive 94/9/EC , T= 125 °C, cat. 3D, IP65.	M	M	M	M	M	M	M	M	M	M	M	P	P	P
461	Ex d/Ex de design, Group II C.	M	M	M	M	M	M	M	M	M	M	P	P	P	P
462	Ex d/Ex de design, temperature class T5.	R	R	R	R	R	R	R	R	R	R	R	R	R	R
463	Ex d/Ex de design, temperature class T6.	R	R	R	R	R	R	R	R	R	R	NA	NA	NA	NA
464	Alleinschutz' design. Certification of flame proof motor and protection device together.	P	P	P	P	P	P	P	P	P	P	P	R	NA	NA
812	Explosion protection according to IEC-Standards.	M	M	M	M	M	M	M	M	M	M	M	P	P	P
813	Thermistor-based surface temperature protection T4 for frequency convertor duty.	M	M	M	M	M	M	M	M	M	M	M	P	P	P
814	Ex tD (DIP) motors, temperature class T 150C.	M	M	M	M	M	M	M	M	M	M	M	P	P	P
Heating elements															
450	Heating element, 100-120V.	M	M	M	M	M	M	M	M	M	M	M	P	P	P
451	Heating element, 200-240V.	M	M	M	M	M	M	M	M	M	M	M	P	P	P
Insulation system															
014	Winding insulation class H.	P	P	P	P	P	P	P	P	P	P	P	P	P	P
405	Special winding insulation for frequency converter supply.	P	P	P	P	P	P	P	P	P	P	P	P	P	P
Mounting arrangements															
007	IM 3001 flange mounted, IEC flange, from IM 1001 (B5 from B3).	M	M	M	M	M	NA	NA	NA	NA	NA	NA	NA	NA	NA
008	IM 2101 foot/flange mounted, IEC flange, from IM 1001 (B34 from B3).	M	M	M	M	M	NA	NA	NA	NA	NA	NA	NA	NA	NA
009	IM 2001 foot/flange mounted, IEC flange, from IM 1001 (B35 from B3).	M	M	M	M	M	M	M	M	M	M	M	P	P	P
047	IM 3601 flange mounted, IEC flange, from IM 3001 (B14 from B5).	M	M	M	M	M	NA	NA	NA	NA	NA	NA	NA	NA	NA
093	IM 3601 flange mounted, IEC flange, from IM 1001 (B14 from B3).	M	M	M	M	M	NA	NA	NA	NA	NA	NA	NA	NA	NA
228	Flange FF 130.	M	M	M	M	NA	NA	NA	NA	NA	NA	NA	NA	NA	NA
229	Flange FT 130.	M	M	M	M	NA	NA	NA	NA	NA	NA	NA	NA	NA	NA
235	Flange FF 165.	NA	NA	NA	NA	M	NA	NA	NA	NA	NA	NA	NA	NA	NA
236	Flange FT 165.	NA	NA	NA	NA	M	NA	NA	NA	NA	NA	NA	NA	NA	NA
245	Flange FF 215.	NA	NA	M	M	M	NA	NA	NA	NA	NA	NA	NA	NA	NA
246	Flange FT 215.	NA	NA	M	M	M	NA	NA	NA	NA	NA	NA	NA	NA	NA
255	Flange FF 265.	NA	NA	NA	NA	M	NA	NA	NA	NA	NA	NA	NA	NA	NA
256	Flange FT 265.	NA	NA	NA	NA	M	NA	NA	NA	NA	NA	NA	NA	NA	NA
257	Flange FF 100.	M	M	NA	NA	NA	NA	NA	NA	NA	NA	NA	NA	NA	NA
258	Flange FT 100.	M	M	NA	NA	NA	NA	NA	NA	NA	NA	NA	NA	NA	NA
259	Flange FF 115.	M	M	NA	NA	NA	NA	NA	NA	NA	NA	NA	NA	NA	NA
260	Flange FT 115.	M	M	NA	NA	NA	NA	NA	NA	NA	NA	NA	NA	NA	NA
305	Additional lifting lugs.	NA	NA	NA	NA	NA	NA	NA	NA	NA	NA	P	P	P	P
306	IM 1001 foot mounted, from IM 3601 (B3 from B14).	M	M	M	M	M	NA	NA	NA	NA	NA	NA	NA	NA	NA
309	IM 1001 foot mounted, from IM 3001 (B3 from B5).	M	M	M	M	M	NA	NA	NA	NA	NA	NA	NA	NA	NA
311	IM 2001 foot/flange mounted, IEC flange, from IM 3001 (B35 from B5).	M	M	M	M	M	NA	NA	NA	NA	NA	NA	NA	NA	NA

[1] Certain variant codes cannot be used simultaneously.

S = Included as standard.
M = On modification of a stocked motor, or on new manufacture, the number per order may be limited.

P =New manufacture only.
R =On request.
NA =Not applicable

3

Code [1] / Variant		80	90	100	112	132	160	180	200	225	250	280	315	355	400
Painting															
106	Paint thickness = 80 µm.	S	S	S	S	S	S	S	S	S	S	S	S	S	S
109	Paint thickness = 120 µm.	M	M	M	M	M	M	M	M	M	M	M	P	P	P
110	Paint thickness = 160 µm.	M	M	M	M	M	M	M	M	M	M	M	P	P	P
111	Offshore two-pack polyamide cured epoxy paint 160 µm.	M	M	M	M	M	M	M	M	M	M	P	P	P	P
114	Special paint colour, standard grade.	M	M	M	M	M	M	M	M	M	M	M	P	P	P
115	Offshore zink primer painting.	P	P	P	P	P	P	P	P	P	P	P	P	P	P
179	Special paint specification.	R	R	R	R	R	R	R	R	R	R	R	R	R	R
Protection															
005	Metal protective roof, vertical motor, shaft down.	M	M	M	M	M	M	M	M	M	M	M	P	P	P
072	Radial seal at D-end.	M	M	M	M	M	M	M	M	M	M	P	P	NA	NA
073	Sealed against oil at D-end.	P	P	P	P	P	P	P	P	P	P	P	P	P	P
158	Degree of protection IP65.	P	M	M	M	M	M	M	M	M	M	M	P	P	P
211	Weather protected, IP xx W.	R	R	R	R	R	R	R	R	R	R	R	R	R	R
403	Degree of protection IP56.	M	M	M	M	M	M	M	M	M	M	M	P	P	P
404	Degree of protection IP56, without fan and fan cover.	NA	NA	NA	NA	NA	R	R	R	R	R	R	R	NA	NA
434	Degree of protection IP56, open deck.	NA	NA	NA	NA	NA	P	P	P	P	P	P	P	P	P
783	Labyrinth sealing at D-end.	P	P	P	P	P	P	P	P	P	P	P	P	S	S
Rating & instruction plates															
002	Restamping voltage, frequency and output, continuous duty.	M	M	M	M	M	M	M	M	M	M	M	P	P	P
095	Restamping output (maintained voltage, frequency), intermittent duty.	M	M	M	M	M	M	M	M	M	M	M	P	P	P
135	Mounting of additional identification plate, stainless.	M	M	M	M	M	M	M	M	M	M	M	P	P	P
139	Additional identification plate delivered loose.	M	M	M	M	M	M	M	M	M	M	M	P	P	P
161	Additional rating plate delivered loose.	M	M	M	M	M	M	M	M	M	M	M	P	P	P
163	Frequency converter rating plate. Rating data according to quotation.	M	M	M	M	M	M	M	M	M	M	M	P	P	P
Shaft & rotor															
069	Two shaft extensions as per basic catalogue.	R	R	R	R	R	P	P	P	P	P	P	P	P	P
070	One or two special shaft extensions, standard shaft material.	P	P	P	P	P	P	P	P	P	P	P	P	P	P
164	Shaft extension with closed key-way.	S	S	S	S	S	S	S	S	S	S	P	P	P	P
165	Shaft extension with open key-way.	P	P	P	P	P	P	P	P	P	P	S	S	S	S
410	Stainless steel shaft (standard or non-standard design).	R	R	R	R	R	R	R	R	R	R	P	P	P	P
Standards and Regulations															
421	VIK design (Verband der industriellen Energie- und Kraftwirtschaft e.V.).	M	M	M	M	M	M	M	M	M	M	P	P	P	P
758	Saudi Aramco design.	P	P	P	P	P	P	P	P	P	P	P	P	P	R
773	EEMUA No 132 1988 design	P	P	P	P	P	P	P	P	R	R	R	R	R	R
774	Design according to NORSOK (Norwegian Territorial Waters).	P	P	P	P	P	P	P	P	P	P	P	P	P	P
775	Design according to SHELL DEP 33.66.05.31-Gen. January 1999 design.	M	M	M	M	M	M	M	M	M	M	P	P	P	P
778	GOST Export/Import Certificate (Russia).	M	M	M	M	M	M	M	M	M	M	P	P	P	P
779	SASO Export/Import Certificate (Saudi Arabia).	M	M	M	M	M	M	M	M	M	M	P	P	P	P
782	Fulfilling CQST Certification requirements (China).	M	M	M	M	M	M	M	M	M	M	P	P	P	P,R
Stator winding temperature sensors															
120	KTY 84-130 (1 per phase) in stator winding.	P	P	P	P	P	P	P	P	P	P	P	P	P	P
121	Bimetal detectors, break type (NCC), (3 in series), 130°C, in stator winding.	P	P	P	P	P	P	P	P	P	P	P	P	P	P
122	Bimetal detectors, break type (NCC), (3 in series), 150°C, in stator winding.	P	P	P	P	P	P	P	P	P	P	P	P	P	P

[1] Certain variant codes cannot be used simultaneously.

S = Included as standard.
M = On modification of a stocked motor, or on new manufacture, the number per order may be limited.

P =New manufacture only.
R =On request.
NA =Not applicable

Code [1] / Variant		80	90	100	112	132	160	180	200	225	250	280	315	355	400
125	Bimetal detectors, break type (NCC), (2x3 in series), 150°C, in stator winding.	P	P	P	P	P	P	P	P	P	P	P	P	P	P
127	Bimetal detectors, break type (NCC), (3 in series, 130°C & 3 in series, 150°C), in stator winding.	P	P	P	P	P	P	P	P	P	P	P	P	P	P
435	PTC - thermistors (3 in series), 130°C, in stator winding.	M	M	M	M	M	M	M	M	M	M	M	P	P	P
436	PTC - thermistors (3 in series), 150°C, in stator winding.	S	S	S	S	S	S	S	S	S	S	S	S	S	S
437	PTC - thermistors (3 in series), 170°C, in stator winding.	NA	NA	NA	NA	NA	P	P	P	P	P	P	P	P	P
438	PTC -thermistors (3 in series), 190°C, in stator winding.	NA	NA	NA	NA	NA	P	P	P	P	P	P	P	P	P
439	PTC - thermistors (2x3 in series), 150°C, in stator winding.	M	M	M	M	M	M	M	M	M	M	M	P	P	P
441	PTC - thermistors (3 in series, 130°C & 3 in series, 150°C), in stator winding.	M	M	M	M	M	M	M	M	M	M	M	P	P	P
445	Pt-100 2-wire in stator winding, 1 per phase.	P	P	P	P	P	P	P	P	P	P	P	P	P	P
446	Pt-100 2-wire in stator winding, 2 per phase.	NA	NA	NA	NA	NA	P	P	P	P	P	P	P	P	P
502	Pt-100 3-wire in stator winding, 1 per phase.	P	P	P	P	P	P	P	P	P	P	P	P	P	P
503	Pt-100 3-wire in stator winding, 2 per phase.	NA	NA	NA	NA	NA	P	P	P	P	P	P	P	P	P
Terminal box															
022	Cable entry LHS (seen from D-end).	M	M	M	M	M	M	M	M	M	M	M	P	P	P
137	Extended cable connection, low terminal box, “Flying leads”. Only Ex de motors.	NA	NA	NA	NA	NA	P	P	P	P	P	NA	NA	NA	NA
157	Terminal box degree of protection IP65.	M	M	M	M	M	M	M	M	M	M	M	P	P	P
187	Cable glands of non-standard design.	NA	NA	NA	NA	NA	R	R	R	R	R	R	R	R	R
380	Separate terminal box for temperature detectors, std. Material.	NA	NA	NA	NA	NA	P	P	P	P	P	P	P	P	P
400	4 x 90 degr turnable terminal box. Ex de sizes 160-280 = M, Ex d = S	S	S	S	S	S	M	M	S	S	S	S	S	S	S
402	Terminal box adapted for Al cables.	NA	NA	NA	NA	NA	NA	NA	NA	NA	NA	S	S	S	S
413	Extended cable connection, no terminal box.	NA	NA	NA	NA	NA	NA	NA	NA	NA	NA	P	P	P	P
418	Separate terminal box for auxiliaries, std. Material.	NA	NA	NA	NA	NA	P	P	P	P	P	P	P	P	P
465	Terminal box on top.	S	S	S	S	S	S	S	S	S	S	S	S	S	S
466	Terminal box at N-end.	NA	NA	NA	NA	NA	R	R	P	P	P	P	P	P	P
468	Cable entry from D-end.	M	M	M	M	M	M	M	M	M	M	P	P	P	P
469	Cable entry from N-end.	M	M	M	M	M	M	M	M	M	M	P	P	P	P
567	Separate terminal box material: Cast Iron. As standard by Ex d motors.	NA	NA	NA	NA	NA	P	P	P	P	P	P	P	P	P
568	Separate terminal box for heating elements, std. Material.	NA	NA	NA	NA	NA	P	P	P	P	P	P	P	P	P
569	Separate terminal box for brakes	NA	NA	NA	NA	NA	P	P	P	P	P	P	P	P	P
728	Standard cable gland, EEx d IIB, armoured cable, double sealing.	P	P	P	P	P	P	P	P	P	P	P	P	P	P
730	Prepared for NPT cable glands.	P	P	P	P	P	P	P	P	P	P	P	P	P	P
732	Standard cable gland, EEx d IIB, armoured cable.	M	M	M	M	M	M	M	M	M	M	P	P	P	P
733	Standard cable gland, EEx d IIB, non-armoured cable.	M	M	M	M	M	M	M	M	M	M	P	P	P	P
734	Standard cable gland, EEx d IIC, armoured cable.	M	M	M	M	M	M	M	M	M	M	P	P	P	P
735	Standard cable gland, EEx d IIC, non-armoured cable.	M	M	M	M	M	M	M	M	M	M	P	P	P	P
736	Standard cable gland EEx e acc. to EN-Standards. Ex de motors only.	S	S	S	S	S	S	S	S	S	S	S	S	S	S
737	Standard cable gland EEx e with clamping device acc. to EN-Standards. Ex de only.	P	P	P	P	P	P	P	P	P	P	P	P	P	P

[1] Certain variant codes cannot be used simultaneously.

S = Included as standard.
M = On modification of a stocked motor, or on new manufacture, the number per order may be limited.

P =New manufacture only.
R =On request.
NA =Not applicable

3

Code [1] / Variant		80	90	100	112	132	160	180	200	225	250	280	315	355	400
743	Painted flange for cable glands. Ex de only.	M	M	M	M	M	M	M	M	M	M	P	P	P	P
744	Stainless steel flange for cable glands. Ex de only.	M	M	M	M	M	M	M	M	M	M	P	P	P	P
745	Painted steel flange equipped with brass cable glands. Ex de only.	M	M	M	M	M	M	M	M	M	M	P	P	P	P
746	Stainless steel cable flange equipped with standard brass cable glands. Ex de only.	P	P	P	P	P	P	P	P	P	P	P	P	P	P
Testing															
145	Type test report from a catalogue motor, 400V 50Hz.	M	M	M	M	M	M	M	M	M	M	M	P	P	P
146	Type test with report for motor from specific delivery batch.	P	P	P	P	P	P	P	P	P	P	P	P	P	P
148	Routine test report.	M	M	M	M	M	M	M	M	M	M	M	P	P	P
150	Customer witnessed testing. Specify test procedure with other codes.	P	P	P	P	P	P	P	P	P	P	P	P	P	P
221	Type test and multi-point load test with report for motor from specific delivery batch.	P	P	P	P	P	P	P	P	P	P	P	P	P	P
222	Torque/speed curve, type test and multi-point load test with report for motor from specific delivery batch.	P	P	P	P	P	P	P	P	P	P	P	P	P	P
760	Vibration level test.	M	M	M	M	M	M	M	M	M	M	M	P	P	P
761	Vibration spectrum test.	P	P	P	P	P	P	P	P	P	P	P	P	P	P
762	Noise level test.	P	P	P	P	P	P	P	P	P	P	P	P	P	P
763	Noise spectrum test.	P	P	P	P	P	P	P	P	P	P	P	P	P	P
764	Test with ABB frequency converter available at ABB test field. ABB standard test procedure.	P	P	P	P	P	P	P	P	P	P	P	P	P	P
Variable speed drives															
163	Frequency converter rating plate. Rating data according to quotation.	M	M	M	M	M	M	M	M	M	M	M	P	P	P
181	Rating plate with ABB standard loadability values for VSD operation. Other auxiliaries for VSD operation to be selected as necessary.	S	S	S	S	S	S	S	S	S	S	P	P	P	P
405	Special winding insulation for frequency converter supply.	P	P	P	P	P	P	P	P	P	P	P	P	P	P
new	Separate motor cooling (fan axial, N-end) and Ex d, tD pulse tacho, 1024 pulses, L&L 841.	NA	NA	NA	NA	NA	R	R	R	R	R	R	R	R	R
new	Separate motor cooling (fan axial, N-end) and Ex d, tD pulse tacho, 1024 pulses, L&L 841.	NA	NA	NA	NA	NA	R	R	R	R	R	R	R	R	R
680	2048 pulse tacho, Ex d, tD, L&L 841910001	NA	NA	NA	NA	NA	P	P	P	P	P	P	P	P	P
701	Insulated bearing at N-end.	NA	NA	NA	NA	NA	NA	NA	NA	NA	NA	M	P	P	P
704	EMC cable gland.	R	R	R	R	R	R	R	R	R	R	R	R	R	R
747	1024 pulse tacho, Ex d, tD, L&L 841910002	NA	NA	NA	NA	NA	P	P	P	P	P	P	P	P	P
Y/D starting															
117	Terminals for Y/D start at both speeds (two speed windings).	NA	NA	NA	NA	NA	R	R	R	R	R	P	P	R	R
118	Terminals for Y/D start at high speed (two speed windings).	NA	NA	NA	NA	NA	R	R	R	R	R	P	P	R	R
119	Terminals for Y/D start at low speed (two speed windings).	NA	NA	NA	NA	NA	R	R	R	R	R	P	P	R	R

[1] Certain variant codes cannot be used simultaneously.

S = Included as standard.
M = On modification of a stocked motor, or on new manufacture, the number per order may be limited.

P =New manufacture only.
R =On request.
NA =Not applicable

Flameproof motors

Dimension drawings

Foot-mounted motor IM 1001, IM B3

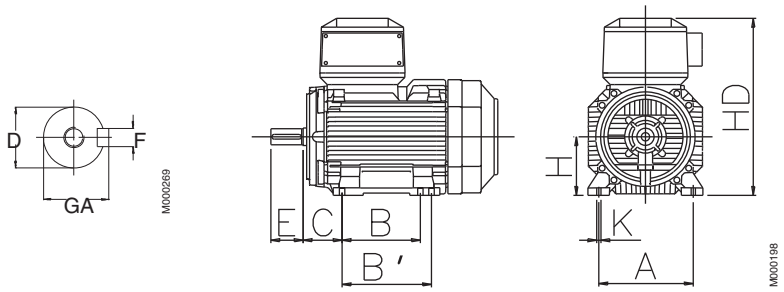

Motor with protection cover

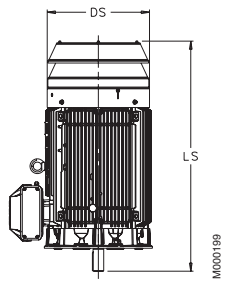

Flange-mounted motor IM 3001, IM B5

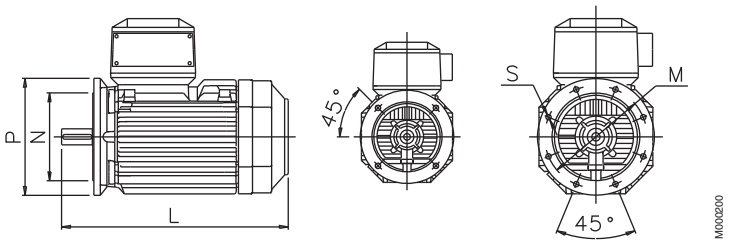

Sizes 80-200 Sizes 225-400

Motor size	IM 1001. IM B3 AND IM 3001. IM B5											IM 1001. IM B3								IM 3001. IM B5				Protective roof		
	D poles		GA poles		F poles		E poles		L max poles		O	A	B	B'	C	HD	HD	K	H	M	N	P	S	DS	LS poles	
	2	4-8	2	4-8	2	4-8	2	4-8	2	4-8						M3JP	M3KP								2	4-8
80	19	19	21.5	21.5	6	6	40	40	340	340	20	125	100	125	50	290	235	10	80	165	130	200	12	160	360	360
90	24	24	27	27	8	8	50	50	405	405	20	140	100	125	56	315	260	10	90	165	130	200	12	180	430	430
100	28	28	31	31	8	8	60	60	440	440	25	160	140	–	63	335	285	10	100	215	180	250	14.5	195	465	465
112	28	28	31	31	8	8	60	60	440	440	25	190	140	–	70	350	300	12	112	215	180	250	14.5	195	465	465
132	38	38	41	41	10	10	80	80	540	540	30	216	140	178	89	390	340	12	132	265	230	300	14.5	260	570	570
160	42	42	45	45	12	12	110	110	711	711	45	254	210	254	108	447	388	14.5	160	300	250	350	18.5	328	756	756
180	48	48	51.5	51.5	14	14	110	110	706	706	50	279	241	279	121	485	426	14.5	180	300	250	350	18.5	359	756	756
200	55	55	59	59	16	16	110	110	774	774	70	318	267	305	133	616	573	18.5	200	350	300	400	18.5	414	844	844
225	55	60	59	64	16	18	110	140	841	871	80	356	286	311	149	663	620	18.5	225	400	350	450	18.5	462	921	951
250	60	65	64	69	18	18	140	140	875	875	90	406	311	349	168	726	683	24	250	500	450	550	18.5	506	965	965
280	65	75	69	79.5	18	20	140	140	1090	1090	100	457	368	419	190	862	768	24	280	500	450	550	18	555	1190	1190
315 SM_	65	80	69	85	18	22	140	170	1176	1206	115	508	406	457	216	929	858	30	315	600	550	660	23	624	1290	1320
315 ML_	65	90	69	95	18	25	140	170	1287	1317	115	508	457	508	216	929	858	30	315	600	550	660	23	624	1401	1431
355 SM_	70	100	74.5	106	20	28	140	210	1409	1479	130	610	500	560	254	1124	984	35	355	740	680	800	23	590	1480	1550
355 ML_	70	100	74.5	106	20	28	140	210	1514	1584	130	610	560	630	254	1124	984	35	355	740	680	800	23	590	1530	1600
355 LK_	70	100	74.5	106	20	28	140	210	1764	1834	130	610	630	710	254	1124	984	35	355	740	680	800	23	590	1635	1705
400 L_	80	110	85	126	22	28	170	210	1851	1891	150	710	900	800	224	1211	1071	35	400	940	880	1000	28	590	1635	1705
400 LK_	80	100	85	106	22	28	170	210	1851	1891	150	686	710	800	280	1211	1071	35	400	740	680	800	23	700	1860	1900

IM 3601, IM B14 - Available flange alternatives ; see also variant codes.

Flange size	Variant code	Flange dimensions P	M	N	S	Motor size M3JP/M3KP 80	90	100	112	132
FT100	258	120	100	80	M6	S	NA	NA	NA	NA
FT115	260	140	115	95	M8	M	S	NA	NA	NA
FT130	229	160	130	110	M8	M	M	S	S	NA
FT165	236	200	165	130	M10	NA	NA	NA	NA	S
FT215	246	250	215	180	M12	NA	M	M	R	R
FT265	256	300	265	230	M12	NA	NA	NA	NA	M
FT100	257	120	100	80	M7	S	M	NA	NA	NA
FT115	259	140	115	95	M10	M	S	NA	NA	NA
FT130	228	160	130	110	M10	M	M	S	S	NA
FT165	235	200	165	130	M12	M	M	M	M	S
FT215	245	250	215	180	M14.5	NA	NA	M	M	M
FT265	255	300	265	230	M14.5	NA	NA	NA	NA	M

S = Standard flange
M = Option
NA = Not possible

Tolerances:

A, B	± 0,8
D, DA	ISO k6 < Ø 50mm
	ISO m6 > Ø 50mm
F, FA	ISO h9
H	+0 -0.5
N	ISO j6
C, CA	± 0.8

Above table gives the main dimensions in mm.
For detailed drawings please check our web-site 'www.abb.com/motors&generators' or contact ABB.

3

Dimension drawings

Flameproof motors, Ex d

Terminal boxes, standard with 6 terminals

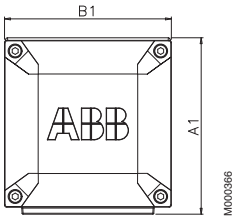

Motor sizes 80-132

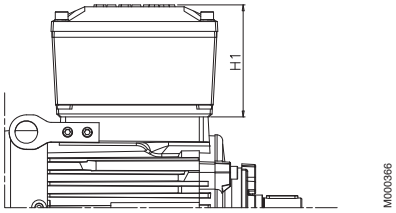

Motor sizes 160-180

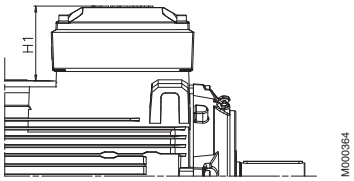

Motor sizes 200-250

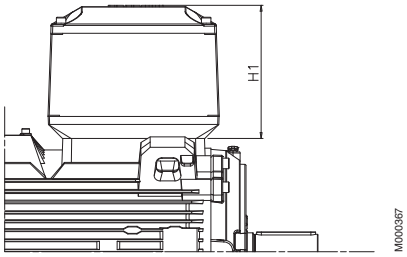

Motor sizes 280 - 315

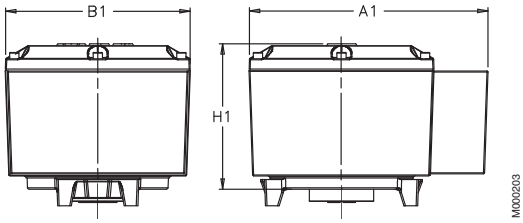

Motor sizes 355 - 400

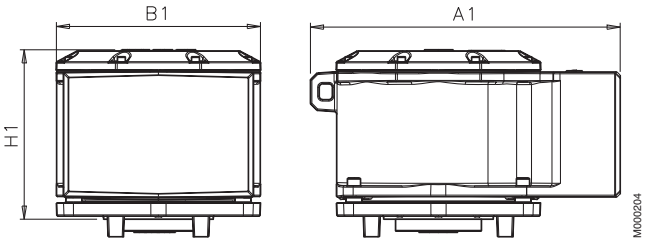

Ex d - M3JP

Motor size	Terminal box	A1	B1	H1
80-132		180	170	114
160-180		251	242	127
200-250		339	291	226
280-400	210	465	370	260
	370	790	490	420
	750	707	466	387

For motor dimensions please see dimension drawings on earlier pages.

Dimension drawings

Flameproof motors, Ex de

Terminal boxes, standard with 6 terminals

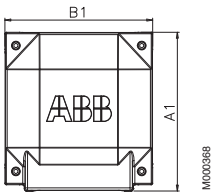

Motor sizes 80 - 132

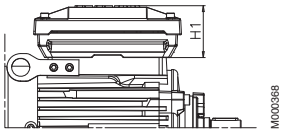

Motor sizes 160 - 180

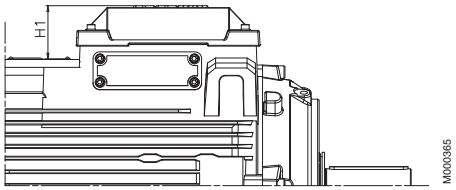

Motor sizes 200 - 250

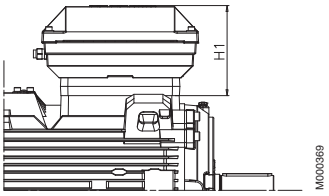

Motor sizes 280 - 315

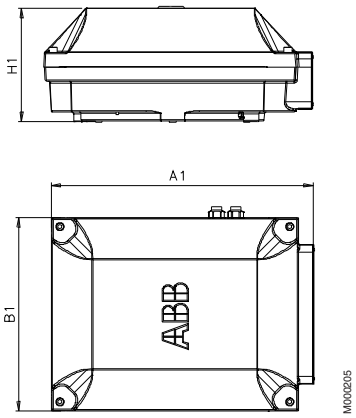

Motor sizes 355 - 400

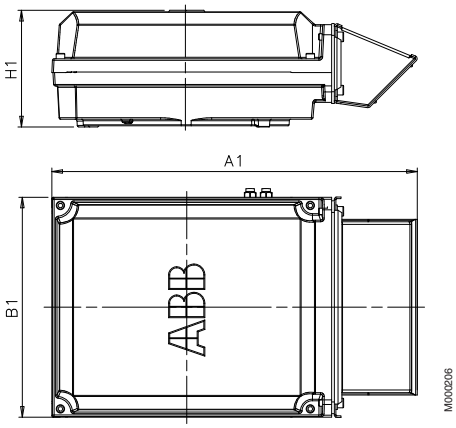

Ex de - M3KP

Motor size	Terminal box	A1	B1	H1
80-132		202	188	66
160-180		234	234	68
200-250		352	319	184
280-400	210	416	306	177
	370	451	347	200
	750 top-mounted	686	413	219
	750 side-mounted	525	413	219

For motor dimensions please see dimension drawings on earlier pages.

LV Flameproof motor construction

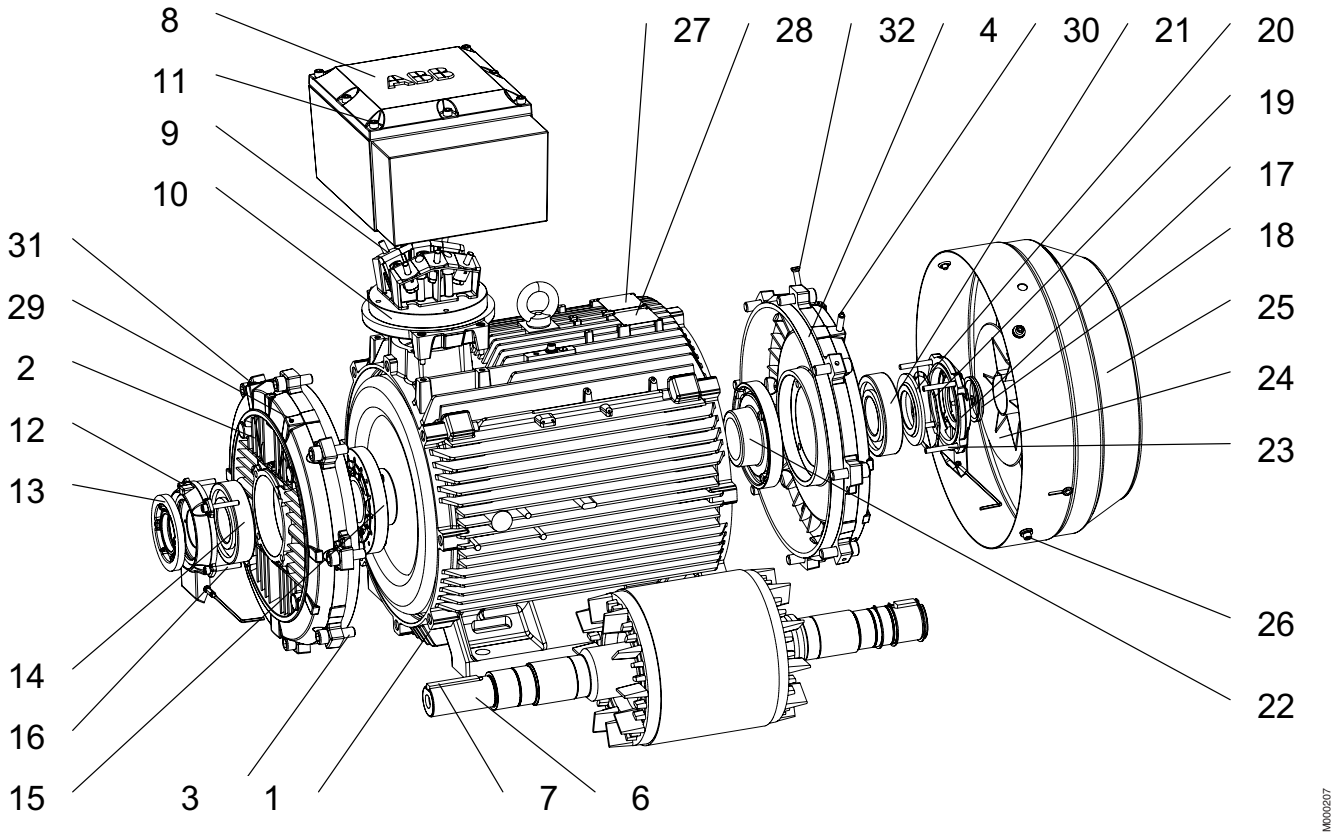

1	Stator frame
2	Endshield, D-end
3	Screws for endshield, D-end
4	Endshield, N-end
5	Screws for endshield, N-end
6	Rotor with shaft
7	Key, D-end
8	Terminal box
9	Terminal board
10	Intermediate flange
11	Screws for terminal box cover
12	Outer bearing cover, D-end
13	Valve disc with labyrinth seal, D-end
14	Bearing, D-end
15	Inner bearing cover, D-end
16	Screws for bearing cover, D-end
17	Outer bearing cover, N-end
18	Seal, N-end
19	Wave spring (280-315) Coil spring (355-400)
20	Valve disc, N-end
21	Bearing, N-end
22	Inner bearing cover, N-end
23	Screws for bearing cover, N-end
24	Fan
25	Fan cover
26	Screws for fan cover
27	Rating plate
28	Regreasing plate
29	Grease nipple, D-end
30	Grease nipple, N-end
31	SPM nipple, D-end
32	SPM nipple, N-end

Flameproof motors Ex d, Ex de in brief, basic design

Motor size		80	90	100	112	132	160	180
Stator	Material	Cast iron EN-GJL-250					Cast iron EN-GJL-200	
	Surface treatment	Blue, Munsell 8B 4.5/3.25 (» NCS 4822-B05G)						
		Two-pack epoxy paint, thickness ≥ 80 µm.						
Bearing end shields	Material	Cast iron EN-GJL-250					Cast iron EN-GJL-200	
	Surface treatment	Blue, Munsell 8B 4.5/3.25 (» NCS 4822-B05G)						
	Paint thickness	Two-pack epoxy paint, thickness ≥ 80 µm.						
Bearings	D-end 2-pole	6205-2Z/C3	6205-2Z/C3	6206-2Z/C3	6206-2Z/C3	6208-2Z/C3	6309M/C3	6310M/C3
	4-12 -pole						6309/C3	6310/C3
	N-end 2-pole	6204-2Z/C3	6205-2Z/C3	6206-2Z/C3	6206-2Z/C3	6208-2Z/C3	6309M/C3	6309M/C3
	4-12 -pole						6309/C3	6309/C3
Axially-locked bearings	Inner bearing cover	As standard, locked at D-end						
Bearing seal		Gamma ring as standard, radial seal on request						
Lubrication		Permanent grease lubrication					Regreasable bearings as std, bearings greased for life as option	
SPM-nipples		–					As standard	
Rating plate	Material	Stainless steel						
Terminal box	Frame material	Cast iron EN-GJL-250					Cast iron EN-GJL-200	
	Cover material	Cast iron EN-GJL-250					Cast iron EN-GJL-200	
	Cover screws material	Acidproof steel (INOX)					Steel 5G, coated with zinc	
Connections	Cable entries	1xM25x1.5		1xM32x1.5			2xM40x1.5	
	Terminals	6 terminals for connection with cable lugs (not included)						
Fan	Material	Reinforced glass fiber laminate					Reinforced glass fiber laminate or aluminum	
Fan cover	Material	Steel					Zinc coated steel	
	Surface treatment	Blue, Munsell 8B 4.5/3.25 (» NCS 4822-B05G)						
	Paint thickness	Two-pack epoxy polyester paint, thickness ≥ 80 µm.					Two-pack polyester paint, thickness ≥ 80 µm.	
Stator winding	Material	Copper						
	Insulation	Insulation class F						
	Winding protection	3 pcs thermistors as standard						
Rotor winding	Material	Pressure die-cast aluminum						
Balancing		Half key balancing						
Key way		Closed						
Heating elements	On request	25 W						
Drain holes		–					Optional	
External earthing bolt		As standard						
Enclosure		IP 55, higher protection on request						
Cooling method		IC 411						

Flameproof motors Ex d, Ex de in brief, basic design

Motor size		200	225	250	280	315	355	400
Stator	Material	Cast iron EN-GJL-200						
	Surface treatment	Blue, Munsell 8B 4.5/3.25 (» NCS 4822-B05G)						
		Two-pack epoxy paint, thickness ≥ 80 µm.						
Bearing end shields	Material	Cast iron EN-GJL-200						
	Surface treatment	Blue, Munsell 8B 4.5/3.25 (» NCS 4822-B05G)						
	Paint thickness	Two-pack epoxy paint, thickness ≥ 80 µm.						
Bearings	D-end 2-pole	6312M/C3	6313M/C3	6315M/C3	6316/C3	6316/C3	6316M/C3	6317M/C3
	4-12 -pole	6312/C3	6313/C3	6315/C3	6316/C3	6319/C3	6322/C3	6324/C3
	N-end 2-pole	6310M/C3	6312M/C3	6313M/C3	6316/C3	6316/C3	6316M/C3	6317M/C3
	4-12 -pole	6310/C3	6312/C3	6313/C3	6316/C3	6316/C3	6316/C3	6319/C3
Axially-locked bearings	Inner bearing cover	As standard, locked at D-end						
Bearing seal		Gamma-ring as standard, radial seal on request			Labyrinth seal as standard, radial seal on request			
Lubrication		Regreasable bearings as standard, bearings greased for life as option			Regreasable bearings, regreasing nipples, M10x1			
SPM-nipples		As standard						
Rating plate	Material	Stainless steel						
Terminal box	Frame material	Cast iron EN-GJL-200					Cast Iron EN-GJL-150 or steel	
	Cover material	Cast iron EN-GJL-200						
	Cover screws material	Steel 5G, coated with zinc and yellow cromated						
Connections	Cable entries	2xM50x1.5			2xM63x1.5		2xM75x1.5	
	Terminals	6 terminals for connection with cable lugs (not included)						
Fan	Material	Reinforced glass fibre laminate or aluminium			Reinforced glass fiber laminate or aluminum			
Fan cover	Material	Zinc coated steel					Steel	
	Surface treatment	Blue, Munsell 8B 4.5/3.25 (» NCS 4822-B05G)						
	Paint thickness	Two-pack polyester paint, thickness ≥ 80 µm.			Two-pack epoxy polyester paint, thickness ≥ 80 µm.			
Stator winding	Material	Copper						
	Insulation	Insulation class F						
	Winding protection	3 pcs thermistors as standard						
Rotor winding	Material	Pressure die-cast aluminum						
Balancing method		Half key balancing						
Key way		Closed			Open			
Heating elements	On request	50 W				2 x 50 W	2 x 65 W	
Drain holes		Optional						
External earthing bolt		As standard						
Enclosure		IP 55, higher protection on request						
Cooling method		IC 411						

Certificate examples

M000208

LCIE

1 **ATTESTATION D'EXAMEN CE DE TYPE**

2 Appareils et systèmes de protection destinés à être utilisés en atmosphères explosibles
Directive 94/9/CE

3 Numéro de l'attestation CE de type
LCIE 01 ATEX 6079

4 Appareil ou système de protection

Moteur type M3JP315 ..., M3KP315 ...

5 Demandeur : ABB Motors OY

6 Adresse : PO Box 633
Strömbergin Puistotie 5A
65101 VAASA FINLANDE

7 Cet appareil ou système de protection et ses variantes éventuelles acceptées est décrit dans l'annexe de la présente attestation et dans les documents descriptifs cités en annexe.

8 Le LCIE, organisme notifié sous la référence 0081 conformément à l'article 9 de la directive 94/9/CE du Parlement européen et du Conseil du 23 mars 1994, certifie que cet appareil ou système de protection est conforme aux exigences essentielles en ce qui concerne la sécurité et la santé pour la conception et la construction d'appareils et de systèmes de protection destinés à être utilisés en atmosphères explosibles, données dans l'annexe II de la directive. Les vérifications et épreuves figurent dans notre rapport confidentiel N° 30 160 010.

9 Le respect des exigences essentielles en ce qui concerne la sécurité et la santé est assuré par la conformité aux documents suivants :
- EN 50014 (1997)
- EN 50018 (2000)
- EN 50019 (2000)
- EN 50281-1-1 (1998)

1 **EC TYPE EXAMINATION CERTIFICATE**

2 Equipment or Protective System Intended for use in Potentially explosive atmospheres
Directive 94/9/CE

3 EC type Examination Certificate number
LCIE 01 ATEX 6079

4 Equipment or Protective system

Motor type M3JP315 ..., M3KP315 ...

5 Applicant : ABB Motors OY

6 Address : PO Box 633
Strömbergin Puistotie 5A
65101 VAASA FINLAND

7 This equipment or protective system and any acceptable variation thereto is specified in the schedule to this certificate and the documents therein refered to.

8 LCIE, notified body number 0081 in accordance with article 9 of the directive 94/9/CE of the European Parliament and Council of 23 March 1994, certifies that this equipment or protective system has been found to comply with the Essential Health and Safety Requirements relating to the design and construction of equipment and protective system intended for use in potentially explosive atmospheres, given in Annex II to the directive.
The examination and test results are recorded in confidential report No 30 160 010.

9 Compliance with the Essential Health and Safety Requirements has been assured by compliance with :

- EN 50014 (1997)
- EN 50018 (2000)
- EN 50019 (2000)
- EN 50281-1-1 (1998)

If the sign X is placed after the certificate number, it indicates that the equipment or protective system is subject to special conditions for safe use specified in the schedule

ABB

EC Declaration of Conformity

The Manufacturer: ABB Oy
Motors
P.O. Box 633
Strömbergin puistotie 5A
FIN - 65101 Vaasa, Finland

hereby declares that

The Products: 3-phase induction motors, series M2BA, M2GP, M3JP, M3KP, M3GP, M3HP and M3LP; as listed on page 2 in this document, are in conformity with provisions of the following Council Directive:

Directive 94/9/EC (ATEX of 23 March 1994).

In respect of product categories the motors are in conformity with provisions of the following harmonized standards:

EN 60079-0 (2004), EN 60079-1 (2004), EN 60079-7 (2003), EN 60079-15 (2005), EN 61241-0 (2006), EN 61241-1 (2004/2006).

Changings of the newest revisions of above standards do not effect the construction of the listed motors, which thus comply with the Essential Health and Safety Requirements in Annex II of said directive.

Note: When installing motors for converter supply applications additional requirements must be respected regarding the motor as well as the installation, as described in the dedicated addendum joined hereafter.

Signed by ----------
Jouni Ikäheimo
Title Product Development Manager

Date February 16th, 2007

ABB Oy

Motors	Visiting Address	Telephone	Internet	Business Identity Code:
Postal address	Strömbergin Puistotie 5 A	+358 10 22 11	www.abb.fi	0763403-0
P.O. Box 633	FI-65320 Vaasa	Telefax	e-mail:	Domicile: Helsinki
FI-65101 Vaasa	FINLAND	+358 10 22 47372	first name.last name	
FINLAND			@fi.abb.com	

M000209

2(2)

ABB

2007-02-16

tion motors, series M2BA, M2GP, M3JP, M3KP, M3GP, M3HP, M3LP

otor type, C frame size	Certification number	Year of CE-marking	Amendment to basic certificate	Year of amend ment
3JP/M3KP 80	LCIE 04 ATEX 6150	2004		
3JP/M3KP 90	LCIE 04 ATEX 6151	2004		
3JP/M3KP 100-112	LCIE 04 ATEX 6152	2004		
3JP/M3KP 132	LCIE 04 ATEX 6061	2004		
3JP/M3KP 160	LCIE 00 ATEX 6023	2000		
3JP/M3KP 180	LCIE 00 ATEX 6028	2000		
3JP/M3KP 200	LCIE 00 ATEX 6027	2000		
3JP/M3KP 225	LCIE 00 ATEX 6029	2000		
3JP/M3KP 250	LCIE 00 ATEX 6030	2000		
3JP/M3KP 280	LCIE 01 ATEX 6078	2001		
3JP/M3KP 315	LCIE 01 ATEX 6079	2001		
3JP/M3KP 355	LCIE 03 ATEX 6060	2003		
3JP/M3KP 400	LCIE 04 ATEX 6087	2004		
3HP 80-90	LCIE 06 ATEX 6047	2006	n.a.	
3HP 100-112	LCIE 06 ATEX 6048	2006	n.a.	
3HP 132	LCIE 06 ATEX 6049	2006	n.a.	
3HP 160	LCIE 01 ATEX 6015	2001	LCIE 01 ATEX 6015/17	2006
3HP 180	LCIE 01 ATEX 6021	2001	LCIE 01 ATEX 6021/11	2006
3HP 200	LCIE 01 ATEX 6022	2001	LCIE 01 ATEX 6022/12	2006
3HP 225	LCIE 01 ATEX 6023	2001	LCIE 01 ATEX 6023/13	2006
3HP 250	LCIE 01 ATEX 6024	2001	LCIE 01 ATEX 6024/8	2006
3HP 280	LCIE 02 ATEX 6071	2002	LCIE 02 ATEX 6071/12	2006
3HP 315	LCIE 02 ATEX 6072	2002	LCIE 02 ATEX 6072/22	2006
3HP 355	LCIE 03 ATEX 6022	2003	LCIE 03 ATEX 6022/11	2006
3HP 400	LCIE 04 ATEX 6013	2004	LCIE 04 ATEX 6013/2	2006
2BA 71-132	LCIE 00 ATEX 6007	2000	LCIE 00 ATEX 6007/01	2006
2GP 71-250	LCIE 05 ATEX 6160	2005	n.a.	
3GP 80 - 400	LCIE 06 ATEX 6089	2006	n.a.	
3GP/M3LP 450	LCIE 06 ATEX 6088	2006	n.a.	
2BA 71-132	LCIE 00 ATEX 6007	2000	LCIE 00 ATEX 6007/01	2006
3GP/M3LP 450	LCIE 06 ATEX 6088	2006	n.a.	
2GP 71-250	LCIE 05 ATEX 6160	2005	n.a.	
3GP 80-400	LCIE 06 ATEX 6089	2006	n.a.	

) ; Av. Du Général Leclerc. 33, 92266 Fontenay-aux-Roses, France

M000209

3

3

Increased safety motors Ex e II T3

Totally enclosed squirrel cage three phase low voltage motors, Sizes 80 - 400, 0.55 to 400 kW

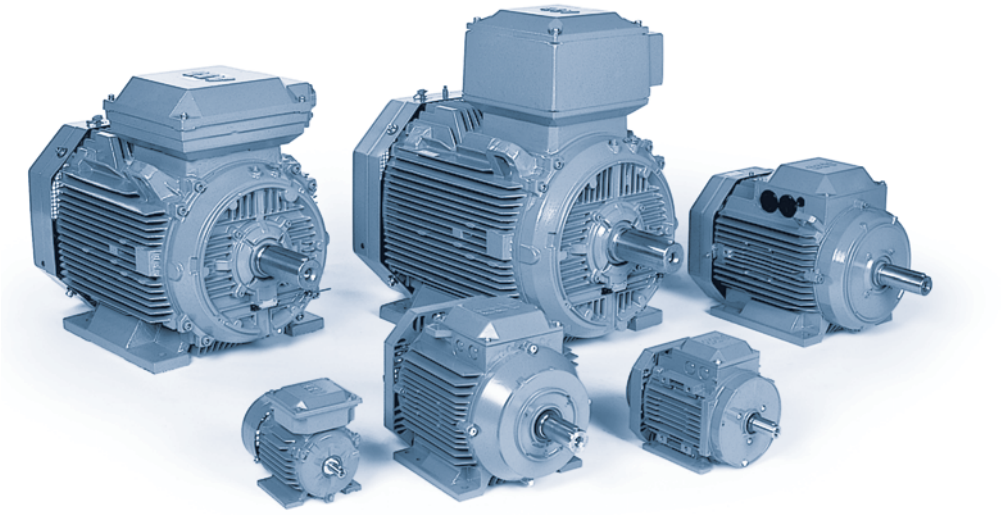

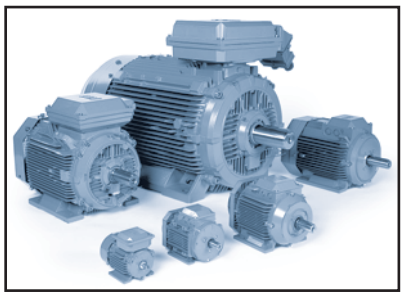

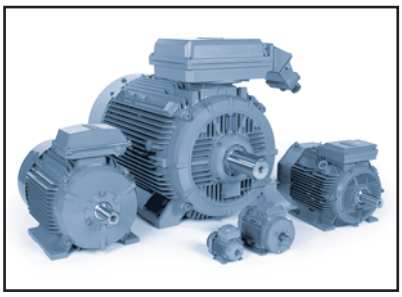

www.abb.com/motors&generators

> Motors

>> Motors and Generators for Hazardous Areas

Mechanical design 66

Ordering information 69

Technical data 70

Rating plates..... 78

Variant codes..... 79

Dimension drawings 87

Increased safety motors in brief..... 92

4

Increased safety Ex e

Terminal boxes

Terminal boxes are mounted on the top of all basic motor versions. The terminal box can also be placed on either side of the motor besides on cast iron 160 to 250 motors. The terminal box is either rotatable or at least allows cable entry from either side which gives a choice of connection possibilities.

Protection class of the standard terminal box is IP 55.

Aluminum motors
In sizes 90 to 180 the terminal box is made of aluminum, the bottom section is integrated with the stator and provided with two openings on both sides. Cable glands are not supplied.

In sizes 200 to 250 the terminal box and cover are made of deep drawn steel, bolted to the stator. The terminal box is provided with two flange openings, one on each side. Cable glands are not supplied.

Cast iron motors
The terminal boxes in motors 80-132 and 200-250 are 4x90° turnable as standard, in motor sizes 160 to 180 and 280-400 as standard 2x180° and as easy option 4x90°.

Motors are delivered with cable glands according to the tables below.

Co-ordination of terminal boxes and cable entries

If no ordering information on the cable is given, it is assumed to be p.v.c. -insulated. Termination parts are supplied according to the tables below.

For aluminum motors 90-180 and cast iron motors 160-400 metric threads are available as standard.

4

Motor sizes 90-280 with aluminum frame

Motor size	Opening	Metric cable entry	Cable diameter mm, min-max	Max.connection cable area mm²	Terminal bolt size	Terminal screw size
90-100	3)	2x(2xM25+M20)	2x(2xD11-16)	6		M4
112-132	3)	2x(M25+M20)	2x(D11-16+D9-13)	10	M5	
160-180	3)	2x(2xM40+M16)	2x(2xD19-27+D5-9)	35	M6	
200-250 1)	2 x FL 13	1x(2xM40+M16)	1x(2xD19-27+D5-9)	70	M10	
200-250 2)	2 x FL 21	1x(2xM63+M16)	1x(2xD32-42+D5-9)	70	M10	
280	2 x FL 21	1x(2xM63+M16)	1x(2xD32-42+D5-9)	70	M10	

1) Voltage code D
2) Voltage code S
3) Knockout openings

Motor sizes 80-400 with cast iron frame

Motor size	Main cable entries						Auxiliary cable entries		
	Thread	Cable gland	Metal plug	Single core cross-section1) mm²	Terminal bolt size 6 x	Outer cable shealth mm	Thread	Cable gland	Outer cable shealth mm
80-90	1xM25	(1x)M25x1.5	-	10	M5	10-16	1xM20x1.5	1xM20x1.5	8-14
100-132	2xM32	(2x)M32x1.5	-	10	M5	16-21	1xM20x1.5	1xM20x1.5	8-14
160-180	2xM40	(2x)M40x1.5	-	35	M6	18-27	2xM20x1.5	2xM20x1.5	8-14
200-250	2xM50	(2x)M50x1.5	-	70	M10	26-35	2xM20x1.5	2xM20x1.5	8-14
280-400	See tables on next pages						2xM20x1.5	2xM20x1.5	8-14

1) Max. size maybe bigger, but depends on the used cable lug. Clearances must be acc. to Ex-standards

Cast iron motor sizes 280-400 – Co-ordination of terminal boxes and cable entries

Motor sizes	Voltage/ freq. code	Ter-minal box	Top-mounted Flange or adapter	Side-mounted Flange or adapter	Cable box or cable gland	Gland thread	Cable diameter	**Max.conn cable area mm²**
3000 r/min (2 poles)								
280		210	3GZF294730-749	3GZF294730-749	2x 3GZF294730-613	**2x M63x1.5**	2x Ø32-49	2x150
315SM, ML		370	3GZF294730-753	3GZF294730-753	2x 3GZF294730-613	**2x M63x1.5**	2x Ø32-49	2x240
315LKA, LKB		370	3GZF294730-753	3GZF294730-753	2x 3GZF294730-613	**2x M63x1.5**	2x Ø32-49	2x240
315LKC		750	3GZF294730-944	3GZF294730-759	3GZF294730-301		2x Ø48-60	4x240
355 SMA	D	750	3GZF294730-944	3GZF294730-759	3GZF294730-301		2x Ø48-60	4x240
355 SMA	E	370	3GZF294730-753	3GZF294730-753	2x 3GZF294730-613	**2x M63x1.5**	2x Ø32-49	2x240
355 SMB, SMC		750	3GZF294730-944	3GZF294730-759	3GZF294730-301		2x Ø48-60	4x240
355 ML, LK		750	3GZF294730-944	3GZF294730-759	3GZF294730-501		2x Ø60-80	4x240
400 L, LK		750	3GZF294730-944	3GZF294730-759	3GZF294730-501		2x Ø60-80	4x240
1500 r/min (4 poles)								
280		210	3GZF294730-749	3GZF294730-749	2x 3GZF294730-613	**2x M63x1.5**	2x Ø32-49	2x150
315SM, ML		370	3GZF294730-753	3GZF294730-753	2x 3GZF294730-613	**2x M63x1.5**	2x Ø32-49	2x240
315LKA, LKB		370	3GZF294730-753	3GZF294730-753	2x 3GZF294730-613	**2x M63x1.5**	2x Ø32-49	2x240
315LKC		750	3GZF294730-944	3GZF294730-759	3GZF294730-301		2x Ø48-60	4x240
355 SMA	D	750	3GZF294730-944	3GZF294730-759	3GZF294730-301		2x Ø48-60	4x240
355 SMA	E	370	3GZF294730-753	3GZF294730-753	2x 3GZF294730-613	**2x M63x1.5**	2x Ø32-49	2x240
355 SMB, SMC		750	3GZF294730-944	3GZF294730-759	3GZF294730-301		2x Ø48-60	4x240
355 ML, LK		750	3GZF294730-944	3GZF294730-759	3GZF294730-501		2x Ø60-80	4x240
400 L, LK		750	3GZF294730-944	3GZF294730-759	3GZF294730-501		2x Ø60-80	4x240
1000 r/min (6 poles)								
280		210	3GZF294730-749	3GZF294730-749	2x 3GZF294730-613	**2x M63x1.5**	2x Ø32-49	2x150
315		370	3GZF294730-753	3GZF294730-753	2x 3GZF294730-613	**2x M63x1.5**	2x Ø32-49	2x240
355 SMA, SMB		370	3GZF294730-753	3GZF294730-753	2x 3GZF294730-613	**2x M63x1.5**	2x Ø32-49	2x240
355 SMC	D	750	3GZF294730-944	3GZF294730-759	3GZF294730-301		2x Ø48-60	4x240
355 SMC	E	370	3GZF294730-753	3GZF294730-753	2x 3GZF294730-613	**2x M63x1.5**	2x Ø32-49	2x240
355 ML		750	3GZF294730-944	3GZF294730-759	3GZF294730-301		2x Ø48-60	4x240
355 LKA		750	3GZF294730-944	3GZF294730-759	3GZF294730-301		2x Ø48-60	4x240
355 LKB		750	3GZF294730-944	3GZF294730-759	3GZF294730-501		2x Ø60-80	4x240
400 L, LK		750	3GZF294730-944	3GZF294730-759	3GZF294730-501		2x Ø60-80	4x240
750 r/min (8 poles)								
280		210	3GZF294730-749	3GZF294730-749	2x 3GZF294730-613	**2x M63x1.5**	2x Ø32-49	2x150
315		370	3GZF294730-753	3GZF294730-753	2x 3GZF294730-613	**2x M63x1.5**	2x Ø32-49	2x240
355 SM		370	3GZF294730-753	3GZF294730-753	2x 3GZF294730-613	**2x M63x1.5**	2x Ø32-49	2x240
355 ML	D	750	3GZF294730-944	3GZF294730-759	3GZF294730-301		2x Ø48-60	4x240
355 ML	E	370	3GZF294730-753	3GZF294730-753	2x 3GZF294730-613	**2x M63x1.5**	2x Ø32-49	2x240
355 LK		750	3GZF294730-944	3GZF294730-759	3GZF294730-301		2x Ø48-60	4x240
400 LA, LB, LKA, LKB		750	3GZF294730-944	3GZF294730-759	3GZF294730-301		2x Ø48-60	4x240
400 LC, LKC			3GZF294730-944	3GZF294730-759	3GZF294730-301		2x Ø48-60	4x240

Voltage/frequency codes:
D = 380-420 VD 50 Hz, 660/690 VY 50 Hz, 440-480 VD 60 Hz
E = 500 VD 50 Hz, 575 VD 60 Hz

Terminal bolt sizes M12.

4

M3HP 280 - 315

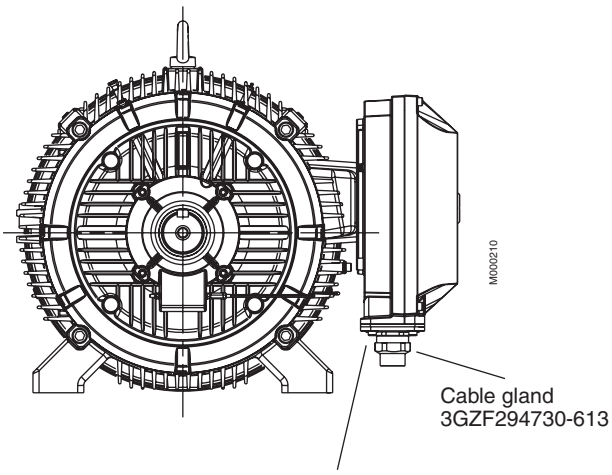

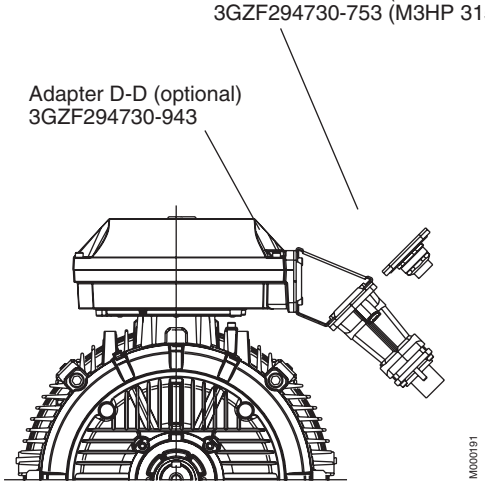

M3HP 355 - 400

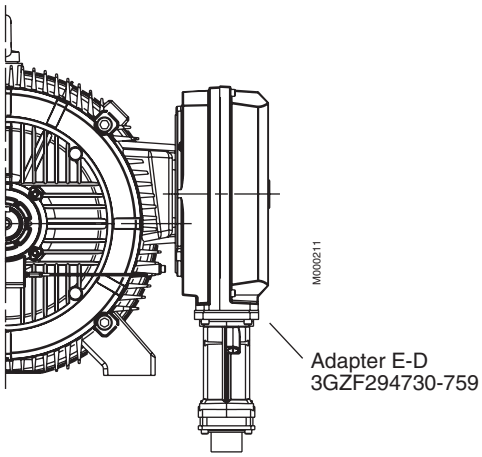

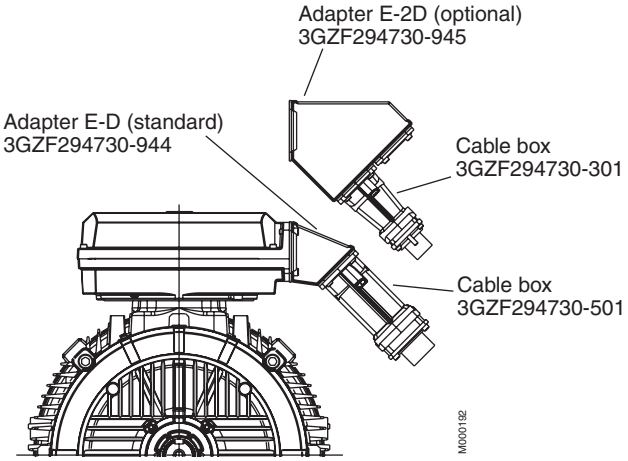

Auxiliary devices (view from N-end)

Cable glands for auxiliary devices
as standard 2 x M20 x 1.5.

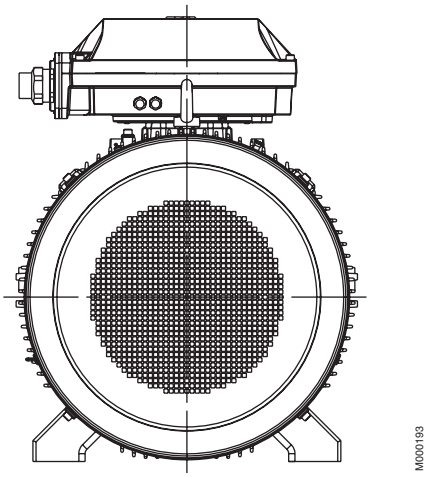

Dimensions for terminal box inlets

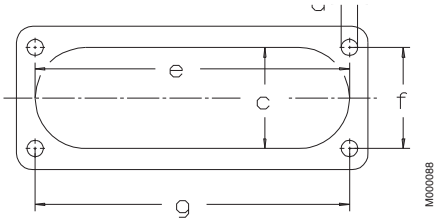

Inlet	c	e	f	g	d
C	62	193	62	193	M8
D	100	300	80	292	M10
E	115	370	100	360	M12

Ordering information

Sample order

When placing an order, please state the following minimum data in the order, as in example.

The product code of the motor is composed in accordance with the following example.

Motor type	M3AAL 90 S
Pole number	2
Mounting arrangement (IM code)	IM B3 (IM 1001)
Rated output	1.5 kW
Product code	3GAA091001-ADE
Variant codes if needed	

Motor size

A	B	C	D, E, F, G
M3AAL	**90 S**	**3GAA 091 001 -**	**A D E 003 etc.**
		1 2 3 4 5 6 7 8 9 10 11	12 13 14

A Motor type
B Motor size
C Product code
- **D** Mounting arrangement code
- **E** Voltage and frequency code
- **F** Generation code

G Variant codes

Explanation of the product code:

Positions 1 to 4
3GAA = Totally enclosed fan cooled squirrel cage motor with aluminum frame, increased safety
3GHP = Totally enclosed fan cooled squirrel cage motor with cast iron frame, increased safety

Positions 5 and 6
IEC-frame

08 = 80	**16** = 160	**28** = 280
09 = 90	**18** = 180	**31** = 315
10 = 100	**20** = 200	**35** = 355
11 = 112	**22** = 225	**40** = 400
13 = 132	**25** = 250	

Position 7
Speed (Pole pairs)
1 = 2 poles
2 = 4 poles
3 = 6 poles
4 = 8 poles

Position 8 to 10
Serial number

Position 11
- (dash)

Position 12
Mounting arrangement
A = Foot-mounted, top-mounted terminal box
R = Foot-mounted, terminal box RHS seen from D-end
L = Foot-mounted, terminal box LHS seen from D-end
B = Flange-mounted, large flange
C = Flange-mounted, small flange (sizes 71 to 112)
H = Foot- and flange-mounted, terminal box top-mounted
J = Foot- and flange-mounted, small flange with tapped holes
S = Foot- and flange-mounted, terminal box RHS seen from D-end
T = Foot- and flange-mounted, terminal box LHS seen from D-end
V = Flange-mounted, special flange
F = Foot- and flange-mounted. Special flange

Position 13
Voltage and frequency code
See table below

Position 14
Generation code
A, B, C...

The product code must be, if needed, followed by variant codes.

4

Code letters for supplementing the product code - aluminum motors — Voltage max. 500 V

Motor size	Code letter for voltage and frequency Direct start or, with Δ-connection, also Y/Δ-start S 50 Hz	60 Hz	D 50 Hz	60 Hz	H 50 Hz	E 50 Hz	F 50 Hz	X
56-100	220-240 VΔ 380-420 VY	440-480 VY	380-420 VΔ 660-690 VY	440-480 VΔ -	-	500 VΔ[1)]	500 VY	Other rated voltage, connection or frequency, 500 V maximum
112-132	220-240 VΔ 380-420 VY	- 440-480 VY	380-420 VΔ 660-690 VY	440-480 VΔ -	415 VΔ	500 VΔ	500 VY	
160-280	220, 230 VΔ 380,400,415 VY	- 440 VY	380,400,415VΔ 660, 690 VY	440 VΔ -	415 VΔ	500 VΔ	500 VY	

[1)] On request.

Code letters for supplementing the product code - cast iron motors — Voltage max. 690 V

Code letter for voltage and frequency
Direct start or, with Δ-connection, also Y/Δ-start

Motor size	S 50Hz	60 Hz	D 50 Hz	60 Hz	H 50 Hz	E 50 Hz	60 Hz	F 50 Hz	T 50 Hz	U 50 Hz	X
80-132	220-240 VΔ 380-420 VY	440 VY -	380-420 VΔ 660-690 VY	440 VΔ -	415 VΔ -	500 VΔ -	575 VΔ -	500 VY -	660 VΔ -	690 VΔ -	Other rated voltage, connection or frequency, 690 V maximum
160-400	230 VΔ 400 VY	- 440VY	400 VΔ 690 VY	440VΔ -	415 VΔ -	500 VΔ -	- -	500 VY -	660 VΔ -	690 VΔ -	

Increased safety motors Ex e II T3

Technical data for totally enclosed squirrel cage three phase aluminum motors, acc. to EN

ATEX Certified

M000194

IP 55, IC 411; Insulation class F, temperature rise class B

Output kW	Motor type		Product code	Speed r/min	Effi-ciency FL 100%	Power factor cos φ	Current I_N A	Current I_s/I_N	Torque T_N Nm	Torque T_s/T_N	Torque T_{max}/T_N	Time tE sec	Moment of inertia J=1/4GD²	Weight kg	Sound pressure level L_p dB(A)
3000 r/min = 2 poles					**400 V 50 Hz**										
1.5	**M3AAL**	**90 S**	3GAA 091 001-••E	2870	80.1	0.84	3.35	6.1	5	2.4	3.0	9	0.0019	13	63
2.2	**M3AAL**	**90 L**	3GAA 091 002-••E	2870	83.4	0.86	4.5	6.9	7.3	2.7	3.0	8	0.0024	16	63
3	**M3AAL**	**100 L**	3GAA 101 001-••E	2900	86.0	0.88	5.95	7.6	10	2.7	3.6	7	0.0041	21	65
4	**M3AAL**	**112 M**	3GAA 111 001-••B	2850	86.0	0.91	7.4	6.8	13.4	2.8	3.0	9	0.01	25	63
5	**M3AAL**	**132 SA**	3GAA 131 001-••B	2865	86.5	0.85	9.8	7.9	17.31	3.2	3.8	6	0.016	42	75
6	**M3AAL**	**132 SB**	3GAA 131 002-••B	2885	85.3	0.82	13	9.2	20	3.4	3.8	6	0.016	42	73
6.6 [1]	**M3AAL**	**132 SBB**	3GAA 131 004-••B	2865	86.8	0.90	12.5	7.9	22	4.7	3.9	5	0.016	57	74
11	**M3AAL**	**160 MA**	3GAA 161 101-••D	2930	91.2	0.88	20	6.3	36	1.9	2.5	10	0.039	73	69
14	**M3AAL**	**160 M**	3GAA 161 102-••D	2925	91.7	0.89	24.8	6.0	45.6	2.4	2.6	10	0.047	84	69
17	**M3AAL**	**160 L**	3GAA 161 103-••D	2925	92.4	0.90	29.4	6.0	55	2.8	2.9	7	0.053	94	69
22	**M3AAL**	**180 M**	3GAA 181 101-••D	2930	92.8	0.89	38.5	7.2	71	2.5	2.7	7.5	0.077	119	69
25	**M3AAL**	**200 MLA**	3GAA 201 001-••E	2960	92.6	0.88	44	8.7	81	2.8	3.4	9	0.15	175	72
30	**M3AAL**	**200 MLB**	3GAA 201 002-••E	2960	93.2	0.88	53	8.9	97	3.3	3.5	7	0.18	200	72
45	**M3AAL**	**225 SMB**	3GAA 221 001-••E	2960	93.9	0.88	79	6.6	145	2.5	2.8	7	0.26	235	74
55	**M3AAL**	**250 SMA**	3GAA 251 001-••E	2970	94.4	0.89	95	7.3	177	2.0	3.0	8	0.49	285	75
65	**M3AAL**	**250 SMB**	3GAA 251 002-••E	2970	94.2	0.89	113	8.2	209	2.8	3.5	7	0.57	375	75
65	**M3AAL**	**280 SMA**	3GAA 281 001-••E	2970	94.2	0.89	113	8.2	209	2.8	3.5	7	0.57	375	75
1500 r/min = 4 poles					**400 V 50 Hz**										
1.1	**M3AAL**	**90 S**	3GAA 092 001-••E	1410	77.5	0.81	2.59	5.0	7.5	2.2	2.7	12	0.0032	13	50
1.5	**M3AAL**	**90 L**	3GAA 092 002-••E	1420	80.3	0.79	3.45	5.7	10	2.4	2.9	16	0.0043	16	50
2.2	**M3AAL**	**100 LA**	3GAA 102 001-••E	1430	83.0	0.81	4.8	5.5	15	2.4	2.9	11	0.0069	21	64
3	**M3AAL**	**100 LB**	3GAA 102 002-••E	1430	85.0	0.81	6.48	5.5	20	2.5	2.9	6	0.0082	24	66
4	**M3AAL**	**112 M**	3GAA 112 001-••B	1435	84.5	0.80	8.6	7.0	26.6	2.9	3.1	12	0.015	27	60
5.5	**M3AAL**	**132 S**	3GAA 132 001-••B	1450	87.0	0.83	11.1	7.3	36.2	2.2	3.0	9	0.031	40	66
7.5	**M3AAL**	**132 M**	3GAA 132 002-••B	1450	88.0	0.83	14.8	7.9	49.4	2.5	3.2	7	0.038	48	66
9.2 [1]	**M3AAL**	**132 MBA**	3GAA 132 004-••B	1450	88.0	0.85	17.8	7.3	60	2.0	2.8	7	0.048	59	63
11	**M3AAL**	**160 M**	3GAA 162 101-••B	1460	90.3	0.81	21.5	6.7	72	2.9	2.8	14	0.067	75	62
14	**M3AAL**	**160 L**	3GAA 162 102-••D	1455	91.1	0.83	26.6	6.9	91	3.2	3.0	13	0.091	94	62
17.5	**M3AAL**	**180 M**	3GAA 182 101-••D	1470	92.3	0.84	33	5.7	113	3.2	2.8	13	0.161	124	62
20	**M3AAL**	**180 L**	3GAA 182 102-••D	1470	92.4	0.83	37.3	6.0	130	3.2	3.0	13	0.191	141	63
30	**M3AAL**	**200 MLA**	3GAA 202 001-••E	1475	93.0	0.83	56	6.3	195	3.7	2.8	9	0.29	180	63
35	**M3AAL**	**225 SMA**	3GAA 222 001-••E	1480	93.3	0.83	66	6.7	226	2.6	2.7	13	0.37	215	66
40	**M3AAL**	**225 SMB**	3GAA 222 002-••E	1480	93.7	0.80	76	7.7	259	2.9	3.1	11	0.42	230	66
50	**M3AAL**	**250 SMA**	3GAA 252 001-••E	1480	94.0	0.82	94	6.6	323	2.6	3.1	10	0.72	275	67
55	**M3AAL**	**250 SMB**	3GAA 252 002-••E	1480	94.0	0.87	97	5.5	355	3.0	3.2	10	0.88	335	67
55	**M3AAL**	**280 SMA**	3GAA 282 001-••E	1480	94.0	0.87	97	5.5	355	3.0	3.2	10	0.88	380	67

[1] Temperature rise class F

Note: When ordering motors, the following variant code has to be added:
273 Ex e II according to ATEX directive 94/9/EC, temp. class T3.

The two bullets in the product code indicate choice of mounting arrangement, voltage and frequency (see ordering information).

Increased safety motors Ex e II T3

Technical data for totally enclosed squirrel cage three phase aluminum motors, acc. to EN

ATEX Certified

IP 55, IC 411; Insulation class F, temperature rise class B

Output kW	Motor type		Product code	Speed r/min	Efficiency FL 100%	Power factor cos φ	Current I_N A	Current I_s/I_N	Torque T_N Nm	Torque T_s/T_N	Torque T_{max}/T_N	Time tE sec	Moment of inertia J=1/4GD²	Weight kg	Sound pressure level L_p dB(A)
1000 r/min = 6 poles					**400 V 50 Hz**										
0.75	**M3AAL**	**90 S**	3GAA 093 001-••E	930	71.5	0.67	2.36	3.6	7.5	1.9	2.3	25	0.0032	13	44
1.1	**M3AAL**	**90 L**	3GAA 093 002-••E	925	71.7	0.64	3.5	4.1	11.4	2.1	2.4	29	0.0043	16	44
1.5	**M3AAL**	**100 L**	3GAA 103 001-••E	950	80.0	0.71	3.92	4.9	15	1.9	2.3	24	0.0082	23	49
2.2	**M3AAL**	**112 M**	3GAA 113 001-••B	945	80.0	0.70	5.7	5.5	23	2.1	2.7	14	0.015	27	66
3	**M3AAL**	**132 S**	3GAA 133 001-••B	960	84.5	0.75	6.9	6.2	29.8	2.0	2.6	15	0.031	39	57
4	**M3AAL**	**132 MA**	3GAA 133 002-••B	960	85.5	0.78	8.7	5.9	39.7	2.0	2.8	12	0.038	46	61
5.5	**M3AAL**	**132 MB**	3GAA 133 003-••B	955	86.0	0.78	11.9	6.4	55	2.2	2.8	11	0.045	54	57
7.5	**M3AAL**	**160 M**	3GAA 163 101-••D	970	89.3	0.79	15.4	6.0	74	2.0	2.8	24	0.089	88	59
11	**M3AAL**	**160 L**	3GAA 163 102-••D	975	89.3	0.73	24.4	7.2	108	2.2	2.9	14	0.107	102	59
15	**M3AAL**	**180 L**	3GAA 183 101-••D	970	90.8	0.78	31	8.0	148	2.1	3.0	17	0.217	151	59
18.5	**M3AAL**	**200 MLA**	3GAA 203 001-••E	985	91.1	0.81	36	5.4	179	2.5	2.7	23	0.37	189	63
22	**M3AAL**	**200 MLB**	3GAA 203 002-••E	980	91.7	0.81	43	6.9	214	2.5	2.7	14	0.43	209	63
30	**M3AAL**	**225 SMB**	3GAA 223 001-••E	985	92.8	0.83	56	6.9	291	2.5	2.7	9	0.64	254	63
37	**M3AAL**	**250 SMA**	3GAA 253 001-••E	985	93.7	0.83	69	7.3	359	2.8	2.8	17	1.16	313	63

4

[1] Temperature rise class F

Note: When ordering motors, the following variant code has to be added:
273 Ex e II according to ATEX directive 94/9/EC, temp. class T3.

The two bullets in the product code indicate choice of mounting arrangement, voltage and frequency (see ordering information).

Increased safety motors Ex e II T3

Technical data for totally enclosed squirrel cage three phase cast iron motors, acc. to EN

ATEX Certified

IP 55, IC 411; Insulation class F, temperature rise class B

Output kW		Motor	type	Product code	Speed r/min	Effi-ciency FL 100%	Power factor cos φ	Current I_N A	Current I_s/I_N	Torque T_N Nm	Torque T_s/T_N	Torque T_{max}/T_N	Time tE sec	Moment of inertia J=1/4 GD²	Weight kg	Sound pressure level L_p dB(A)
3000 r/min = 2-poles						**400 V 50 Hz**										
0.75		**M3HP**	**80 MA**	3GHP 081 310-••G	2861	78.2	0.86	1.62	7.3	2.5	3.7	3.8	15	0.0006	28	59
1.1		**M3HP**	**80 MB**	3GHP 081 320-••G	2831	82.0	0.89	2.21	5.7	3.7	3.0	3.2	11	0.0007	30	59
1.5		**M3HP**	**90 SLA**	3GHP 091 010-••G	2881	82.7	0.88	3	6.7	5	3.0	3.5	12	0.001	41	61
2.2		**M3HP**	**90 SLC**	3GHP 091 030-••G	2871	85.3	0.90	4.19	7.3	7.3	2.7	3.5	6	0.0014	44	61
3		**M3HP**	**100 LA**	3GHP 101 510-••G	2896	87.4	0.90	5.6	7.2	10	2.2	3.0	7	0.0036	58	65
3.7		**M3HP**	**112 MB**	3GHP 111 320-••G	2910	87.8	0.90	6.9	7.8	12	3.9	4.0	5	0.0043	61	65
5.5		**M3HP**	**132 SMB**	3GHP 131 220-••G	2905	87.6	0.90	10.4	7.0	18	2.4	3.3	9	0.009	89	71
7.5		**M3HP**	**132 SMD**	3GHP 131 240-••G	2914	89.0	0.90	13.8	7.6	25	2.8	3.6	5	0.012	97	71
8		**M3HP**	**160 MLB**	3GHP 161 420-••G	2939	89.9	0.91	14.5	7.5	26	2.8	3.5	12	0.047	156	69
11		**M3HP**	**160 MLC**	3GHP 161 430-••G	2940	92.0	0.92	19	7.6	36	2.6	3.4	10	0.054	167	69
12.5		**M3HP**	**160 MLD**	3GHP 161 440-••G	2935	92.5	0.92	22	7.8	41	2.8	3.4	7	0.059	173	69
15		**M3HP**	**180 MLB**	3GHP 181 420-••G	2952	92.5	0.91	26	7.7	48.5	2.4	3.3	8	0.092	210	69
18		**M3HP**	**180 MLC**	3GHP 181 430-••G	2952	93.5	0.91	31	7.3	58	2.4	3.2	9	0.114	229	69
22		**M3HP**	**200 MLC**	3GHP 201 430-••G	2956	93.2	0.90	38.5	6.9	71	2.6	3.5	10	0.21	305	72
25		**M3HP**	**200 MLE**	3GHP 201 450-••G	2957	93.7	0.89	44	7.0	81	2.9	3.8	9	0.22	310	72
30		**M3HP**	**225 SMB**	3GHP 221 220-••G	2963	92.3	0.91	51	7.4	97	2.1	3.0	10	0.31	365	74
36		**M3HP**	**225 SMD**	3GHP 221 240-••G	2965	94.7	0.92	60	8.0	116	2.3	3.2	7	0.36	395	74
40		**M3HP**	**250 SMB**	3GHP 251 220-••G	2973	94.3	0.92	67	7.8	128	2.2	3.0	8	0.66	475	74
47		**M3HP**	**250 SMC**	3GHP 251 230-••G	2972	94.5	0.90	80	7.8	151	2.3	3.0	6	0.69	495	74
60	1)	**M3HP**	**280 SMA**	3GHP 281 210-••G	2975	94.6	0.91	100	7.3	193	1.2	2.9	10	0.8	625	77
75	1)	**M3HP**	**280 SMB**	3GHP 281 220-••G	2975	94.6	0.91	125	7.6	241	1.2	2.9	8	0.9	665	77
77	1)	**M3HP**	**315 SMA**	3GHP 311 210-••G	2984	94.6	0.90	132	7.3	246	0.9	2.9	13	1.2	880	78
80	1)	**M3HP**	**280 SMC**	3GHP 281 230-••G	2975	94.9	0.92	132	7.4	257	1.2	2.8	7	1.15	725	77
90	1)	**M3HP**	**315 SMB**	3GHP 311 220-••G	2983	95.2	0.90	152	7.2	288	0.9	2.8	10	1.4	940	78
120	1)	**M3HP**	**315 SMC**	3GHP 311 230-••G	2982	95.6	0.91	201	7.4	384	1.0	2.9	6	1.7	1025	78
135	1)	**M3HP**	**315 MLA**	3GHP 311 410-••G	2983	95.9	0.92	222	8.0	432	1.2	3.0	6	2.1	1190	78
175	1)	**M3HP**	**355 SMA**	3GHP 351 210-••G	2987	95.9	0.91	290	7.4	560	0.8	3.2	10	3	1600	83
200	1)	**M3HP**	**355 SMB**	3GHP 351 220-••G	2986	96.1	0.90	333	7.3	640	0.8	3.2	7	3.4	1680	83
220	1)	**M3HP**	**355 MLA**	3GHP 351 410-••G	2983	96.4	0.91	363	7.1	704	0.9	3.0	8	4.1	2000	83
300	1)	**M3HP**	**355 LKA**	3GHP 351 810-••G	2986	96.6	0.92	488	7.4	960	0.9	3.2	6	4.8	2320	83
355	2)	**M3HP**	**400 LB**	3GHP 401 520-••G	2989	97.1	0.91	580	7.6	1134	0.7	3.4	7	8.2	3050	82
355	2)	**M3HP**	**400 LKB**	3GHP 401 820-••G	2989	97.1	0.91	580	7.6	1134	0.7	3.4	7	8.2	3050	82
400	2)	**M3HP**	**400 LC**	3GHP 401 530-••G	2988	97.2	0.92	645	7.5	1278	0.8	3.4	6	9.3	3300	82
400	2)	**M3HP**	**400 LKC**	3GHP 401 830-••G	2988	97.2	0.92	645	7.5	1278	0.8	3.4	6	9.3	3300	82

1) -3dB(A) sound pressure level reduction with unidirectional fan construction. Direction of rotation must be stated when ordering, see variant codes 044 and 045.

2) Unidirectional fan construction as standard. Direction of rotation must be stated when ordering, see variant codes 044 and 045.

The two bullets in the product code indicate choice of mounting arrangement, voltage and frequency (see ordering information)

LV Increased safety motors Ex e II T3

Technical data for totally enclosed squirrel cage three phase cast iron motors, acc. to EN

ATEX Certified

IP 55, IC 411; Insulation class F, temperature rise class B

Output kW	Motor	type	Product code	Speed r/min	Effi-ciency FL 100%	Power factor cos φ	Current I_N A	Current I_s/I_N	Torque T_N Nm	Torque T_s/T_N	Torque T_{max}/T_N	Time tE sec	Moment of inertia J=1/4 GD²	Weight kg	Sound pressure level L_p dB(A)
1500 r/min = 4-poles					**400 V 50 Hz**										
0.55	**M3HP**	**80 MA**	3GHP 082 310-••G	1421	77.2	0.76	1.4	4.9	3.7	2.3	2.7	20	0.001	29	59
0.75	**M3HP**	**80 MB**	3GHP 082 320-••G	1413	78.3	0.79	1.8	5.1	5.1	2.4	2.7	20	0.0012	29	59
1.1	**M3HP**	**90 SLA**	3GHP 092 010-••G	1435	80.8	0.81	2.48	5.9	7.3	2.8	3.5	20	0.002	42	54
1.5	**M3HP**	**90 SLC**	3GHP 092 030-••G	1431	81.8	0.81	3.31	6.4	10	2.9	3.4	18	0.003	44	54
2.2	**M3HP**	**100 LA**	3GHP 102 510-••G	1441	86.4	0.86	4.4	7.0	14.5	2.7	3.3	20	0.0075	58	52
3	**M3HP**	**100 LB**	3GHP 102 520-••G	1442	86.2	0.83	6.1	7.0	20	2.7	3.4	12	0.0081	60	52
3.7	**M3HP**	**112 MC**	3GHP 112 330-••G	1441	85.9	0.82	7.7	7.3	24.5	3.1	4.0	11	0.0093	63	52
5.5	**M3HP**	**132 SMB**	3GHP 132 220-••G	1448	87.6	0.81	11.4	6.7	36	3.1	3.3	13	0.02	93	60
7.5	**M3HP**	**132 SMD**	3GHP 132 240-••G	1447	88.4	0.81	15.4	6.6	50	3.1	3.4	6	0.023	99	60
11	**M3HP**	**160 MLC**	3GHP 162 430-••G	1463	91.0	0.84	21	7.2	72	2.6	3.1	15	0.09	166	62
15	**M3HP**	**160 MLE**	3GHP 162 450-••G	1468	91.9	0.83	29	8.1	98	3.1	3.6	6	0.121	189	68
17	**M3HP**	**180 MLB**	3GHP 182 420-••G	1471	92.6	0.84	33	6.6	110	2.3	2.9	12	0.191	214	66
20	**M3HP**	**180 MLC**	3GHP 182 430-••G	1476	93.1	0.82	38	7.4	129	2.7	3.1	8	0.239	233	66
26	**M3HP**	**200 MLA**	3GHP 202 410-••G	1479	92.7	0.87	47	7.9	168	1.9	3.1	13	0.3	280	73
30	**M3HP**	**200 MLB**	3GHP 202 420-••G	1477	93.0	0.88	54	7.4	194	1.9	3.0	9	0.35	305	73
38	**M3HP**	**225 SMB**	3GHP 222 220-••G	1479	93.7	0.88	67	7.3	245	1.7	3.1	9	0.45	365	74
43	**M3HP**	**225 SMC**	3GHP 222 230-••G	1479	93.8	0.89	76	7.7	277	1.8	3.1	5	0.53	390	74
50	**M3HP**	**250 SMA**	3GHP 252 210-••G	1482	93.8	0.87	88	7.1	322	1.5	3.1	8	0.77	425	73
60	**M3HP**	**250 SMB**	3GHP 252 220-••G	1483	94.9	0.88	105	7.3	386	1.7	3.2	8	0.98	470	73
65	**M3HP**	**280 SMA**	3GHP 282 210-••G	1485	94.8	0.88	113	7.4	418	1.5	3.0	8	1.25	625	68
75	**M3HP**	**280 SMB**	3GHP 282 220-••G	1484	95.1	0.89	130	7.2	483	1.5	3.0	6	1.5	665	68
82	**M3HP**	**280 SMC**	3GHP 282 230-••G	1483	95.2	0.90	139	7.0	528	1.5	2.8	6	1.85	725	68
95	**M3HP**	**315 SMA**	3GHP 312 210-••G	1488	95.6	0.88	165	6.9	610	1.1	2.5	8	2.3	900	73
110	**M3HP**	**315 SMB**	3GHP 312 220-••G	1488	95.8	0.88	188	6.8	706	1.1	2.6	8	2.6	960	73
128	**M3HP**	**315 SMC**	3GHP 312 230-••G	1486	95.8	0.89	217	6.8	823	1.1	2.6	5	2.9	1000	73
145	**M3HP**	**315 MLA**	3GHP 312 410-••G	1487	96.2	0.89	245	6.9	931	1.1	2.6	5	3.5	1160	73
190	**M3HP**	**355 SMA**	3GHP 352 210-••G	1492	96.7	0.87	330	7.1	1216	1.0	2.9	9	5.9	1610	75
230	**M3HP**	**355 SMB**	3GHP 352 220-••G	1492	96.7	0.87	393	7.3	1472	1.1	3.1	6	6.9	1780	78
280	**M3HP**	**355 MLA**	3GHP 352 410-••G	1491	96.8	0.88	475	7.0	1793	1.1	3.0	5	8.4	2140	78
310	**M3HP**	**355 LKA**	3GHP 352 810-••G	1490	96.7	0.88	525	6.9	1987	1.1	2.9	7	10	2500	78
350	**M3HP**	**400 LA**	3GHP 402 510-••G	1491	97.1	0.89	590	6.4	2242	1.2	2.5	6	15	3200	78
350	**M3HP**	**400 LKA**	3GHP 402 810-••G	1491	97.1	0.89	590	6.4	2242	1.2	2.5	6	15	3200	78
390	**M3HP**	**400 LC**	3GHP 402 530-••G	1493	97.2	0.88	660	7.4	2494	1.0	2.7	6	17	3400	78
390	**M3HP**	**400 LKC**	3GHP 402 830-••G	1493	97.2	0.88	660	7.4	2494	1.0	2.7	6	17	3400	78

The two bullets in the product code indicate choice of mounting arrangement, voltage and frequency (see ordering information)

4

Increased safety motors Ex e II T3

Technical data for totally enclosed squirrel cage three phase cast iron motors, acc. to EN

ATEX Certified

IP 55, IC 411; Insulation class F, temperature rise class B

Output kW	Motor	type	Product code	Speed r/min	Effi-ciency FL 100%	Power factor cos φ	Current I_N A	Current I_s/I_N	Torque T_N Nm	Torque T_s/T_N	Torque T_{max}/T_N	Time tE sec	Moment of inertia J=1/4 GD²	Weight kg	Sound pressure level L_p dB(A)
1000 r/min = 6-poles					**400 V 50 Hz**										
0.37	**M3HP**	**80 MA**	3GHP 083 310-••G	953	67.2	0.62	1.32	4.6	3.7	3.4	3.6	20	0.0022	29	50
0.55	**M3HP**	**80 MB**	3GHP 083 320-••G	938	67.9	0.68	1.79	4.3	5.6	2.8	2.9	20	0.0022	29	50
0.75	**M3HP**	**90 SLA**	3GHP 093 010-••G	942	74.0	0.69	2.17	4.5	7.6	2.8	3.2	0	0.0036	41	44
1.1	**M3HP**	**90 SLC**	3GHP 093 030-••G	940	75.6	0.67	3.25	4.6	11	3.1	3.4	20	0.0037	43	44
1.5	**M3HP**	**100 LA**	3GHP 103 510-••G	951	81.2	0.74	3.7	4.2	15	2.3	2.9	20	0.012	57	54
2.2	**M3HP**	**112 MB**	3GHP 113 320-••G	950	81.8	0.76	5.2	5.9	22	2.2	2.8	18	0.014	60	50
3	**M3HP**	**132 SMB**	3GHP 133 220-••G	961	83.2	0.77	6.9	6.1	30	2.1	3.0	20	0.032	93	57
4	**M3HP**	**132 SMC**	3GHP 133 230-••G	967	85.6	0.74	9.3	6.6	39.5	2.3	3.4	17	0.034	95	57
5.5	**M3HP**	**132 SMD**	3GHP 133 240-••G	958	85.5	0.76	12.5	6.7	55	2.2	3.0	11	0.036	97	57
6.6	**M3HP**	**160 MLA**	3GHP 163 410-••G	973	89.4	0.79	13.8	7.3	65	2.1	3.4	14	0.088	160	57
7.5	**M3HP**	**160 MLB**	3GHP 163 420-••G	974	90.2	0.78	15.5	7.7	74	2.1	3.6	20	0.106	173	65
11	**M3HP**	**160 MLC**	3GHP 163 430-••G	971	90.3	0.76	23.7	7.0	108	2.6	3.8	10	0.127	188	65
14	**M3HP**	**180 MLB**	3GHP 183 420-••G	975	91.4	0.79	28.5	7.6	137	1.8	3.0	16	0.221	233	67
16.5	**M3HP**	**200 MLB**	3GHP 203 420-••G	984	92.0	0.84	31	7.0	160	3.2	3.3	23	0.47	290	65
20	**M3HP**	**200 MLC**	3GHP 203 430-••G	983	92.3	0.84	38	7.1	194	3.0	2.7	17	0.52	305	65
30	**M3HP**	**225 SMC**	3GHP 223 230-••G	985	93.0	0.83	56	7.0	291	2.9	3.0	7	0.78	380	64
37	**M3HP**	**250 SMB**	3GHP 253 220-••G	988	94.0	0.86	66	7.2	358	2.6	2.8	10	1.6	465	65
45	**M3HP**	**280 SMA**	3GHP 283 210-••G	986	94.0	0.88	79	6.7	435	1.5	2.8	13	1.85	605	66
50	**M3HP**	**280 SMB**	3GHP 283 220-••G	987	94.2	0.88	86	7.0	484	1.4	2.6	9	2.2	645	66
62	**M3HP**	**280 SMC**	3GHP 283 230-••G	986	94.8	0.88	106	7.6	600	1.5	2.6	6	2.85	725	66
72	**M3HP**	**315 SMA**	3GHP 313 210-••G	992	94.8	0.84	130	7.2	693	1.3	2.5	7	3.2	830	72
85	**M3HP**	**315 SMB**	3GHP 313 220-••G	991	95.0	0.87	148	7.3	819	1.3	2.4	6	4.1	930	72
100	**M3HP**	**315 SMC**	3GHP 313 230-••G	991	95.4	0.86	177	6.7	964	1.2	2.2	14	4.9	1000	72
120	**M3HP**	**315 MLA**	3GHP 313 410-••G	991	95.6	0.86	212	7.6	1156	1.3	2.5	5	5.8	1150	72
150	**M3HP**	**355 SMA**	3GHP 353 210-••G	993	95.8	0.84	268	6.8	1442	1.3	2.6	6	7.9	1510	75
180	**M3HP**	**355 SMB**	3GHP 353 220-••G	994	96.1	0.86	315	7.2	1729	1.3	2.6	5	9.7	1680	75
230	**M3HP**	**355 MLB**	3GHP 353 420-••G	993	96.3	0.85	405	7.1	2212	1.3	2.5	6	13.5	2180	75
260	**M3HP**	**355 LKA**	3GHP 353 810-••G	993	96.5	0.85	458	7.1	2500	1.4	2.6	6	15.5	2500	75
300	**M3HP**	**400 LA**	3GHP 403 510-••G	995	96.8	0.84	532	6.9	2879	1.3	2.5	6	17	2900	76
300	**M3HP**	**400 LKA**	3GHP 403 810-••G	995	96.8	0.84	532	6.9	2879	1.3	2.5	6	17	2900	76
350	**M3HP**	**400 LB**	3GHP 403 520-••G	995	97.0	0.84	620	7.4	3359	1.4	2.6	6	20.5	3150	76
350	**M3HP**	**400 LKB**	3GHP 403 820-••G	995	97.0	0.84	620	7.4	3359	1.4	2.6	6	20.5	3150	76

The two bullets in the product code indicate choice of mounting arrangement, voltage and frequency (see ordering information)

Increased safety motors Ex e II T3

Technical data for totally enclosed squirrel cage three phase cast iron motors, acc. to EN

ATEX Certified

IP 55, IC 411; Insulation class F, temperature rise class B

Output kW	Motor	type	Product code	Speed r/min	Effi-ciency FL 100%	Power factor cos φ	Current I_N A	Current I_s/I_N	Torque T_N Nm	Torque T_s/T_N	Torque T_{max}/T_N	Time tE sec	Moment of inertia J=1/4 GD²	Weight kg	Sound pressure level L_p dB(A)
750 r/min = 8-poles					**400 V 50 Hz**										
0.18	**M3HP**	**80 MA**	3GHP 084 310-••G	720	54.0	0.48	1.08	3.3	2.4	3.7	4.0	30	0.0022	29	36
0.25	**M3HP**	**80 MB**	3GHP 084 320-••G	705	58.0	0.58	1.15	3.2	3.4	2.6	2.8	30	0.0022	29	36
0.37	**M3HP**	**90 SLA**	3GHP 094 010-••G	696	65.2	0.63	1.34	3.0	5.1	2.0	2.2	0	0.0036	41	36
0.55	**M3HP**	**90 SLC**	3GHP 094 030-••G	695	66.6	0.61	2.05	3.1	7.6	2.2	2.4	20	0.0037	43	36
0.75	**M3HP**	**100 LA**	3GHP 104 510-••G	720	74.7	0.59	2.6	3.8	10	2.0	2.9	0	0.012	57	44
1.1	**M3HP**	**100 LB**	3GHP 104 520-••G	717	75.2	0.57	3.9	3.7	15	2.1	2.9	0	0.012	57	46
1.5	**M3HP**	**112 MC**	3GHP 114 330-••G	713	76.7	0.59	5	3.7	20	2.0	2.7	20	0.014	61	44
2.2	**M3HP**	**132 SMC**	3GHP 134 230-••G	720	79.6	0.65	6.3	4.7	29	2.0	2.9	20	0.034	95	59
3	**M3HP**	**132 SMD**	3GHP 134 240-••G	710	80.2	0.70	8	4.1	40	1.7	2.3	20	0.036	97	59
3.5	**M3HP**	**160 MLA**	3GHP 164 410-••G	719	83.0	0.66	9.5	5.1	46	1.8	2.9	21	0.071	146	59
4.8	**M3HP**	**160 MLB**	3GHP 164 420-••G	719	85.5	0.70	12	5.5	64	1.8	2.9	20	0.09	160	53
6.6	**M3HP**	**160 MLC**	3GHP 164 430-••G	721	86.8	0.71	16	6.0	87	1.8	3.0	19	0.121	188	55
9.7	**M3HP**	**180 MLB**	3GHP 184 420-••G	726	89.8	0.74	21.5	5.9	127	1.7	2.8	19	0.239	227	63
15	**M3HP**	**200 MLB**	3GHP 204 420-••G	736	91.0	0.80	30.5	7.1	195	2.2	3.4	20	0.54	300	64
22	**M3HP**	**225 SMC**	3GHP 224 230-••G	735	92.3	0.81	43	6.8	286	2.1	3.3	21	0.75	375	65
27	**M3HP**	**250 SMA**	3GHP 254 210-••G	736	92.2	0.82	51	6.6	350	1.9	2.8	21	1.25	420	65
32	**M3HP**	**250 SMB**	3GHP 254 220-••G	737	92.6	0.82	61	7.0	415	2.0	2.9	13	1.52	465	65
37	**M3HP**	**280 SMA**	3GHP 284 210-••G	741	93.2	0.80	72	6.7	477	1.5	2.6	10	1.85	605	65
45	**M3HP**	**280 SMB**	3GHP 284 220-••G	738	93.7	0.82	85	6.4	580	1.3	2.6	10	2.2	645	65
55	**M3HP**	**280 SMC**	3GHP 284 230-••G	741	94.2	0.80	105	7.8	709	1.6	2.8	5	2.85	725	65
75	**M3HP**	**315 SMB**	3GHP 314 220-••G	743	94.8	0.80	145	6.5	964	1.1	2.2	10	4.1	930	62
90	**M3HP**	**315 SMC**	3GHP 314 230-••G	743	95.0	0.80	172	6.9	1157	1.2	2.3	6	4.9	1000	64
105	**M3HP**	**315 MLA**	3GHP 314 410-••G	743	95.2	0.80	200	7.2	1350	1.2	2.3	6	5.8	1150	72
132	**M3HP**	**355 SMB**	3GHP 354 220-••G	744	95.6	0.83	241	7.6	1694	1.3	2.4	7	9.7	1680	75
150	**M3HP**	**355 SMC**	3GHP 354 230-••G	744	95.8	0.80	283	7.3	1925	1.3	2.5	10	11.3	1820	75
180	**M3HP**	**355 MLB**	3GHP 354 420-••G	743	95.8	0.82	330	6.7	2313	1.2	2.4	6	13.5	2180	75
215	**M3HP**	**355 LKB**	3GHP 354 820-••G	744	96.1	0.81	400	7.5	2760	1.3	2.6	5	16.5	2600	75
230	**M3HP**	**400 LKA**	3GHP 404 810-••G	745	96.5	0.82	420	7.0	2948	1.2	2.5	7	17	2900	71
230	**M3HP**	**400 LA**	3GHP 404 510-••G	745	96.5	0.82	420	7.0	2948	1.2	2.5	7	17	2900	71
280	**M3HP**	**400 LB**	3GHP 404 520-••G	744	96.5	0.83	505	6.7	3594	1.1	2.2	6	21	3200	71
280	**M3HP**	**400 LKB**	3GHP 404 820-••G	744	96.5	0.83	505	6.7	3594	1.1	2.2	6	21	3200	71
315	**M3HP**	**400 LC**	3GHP 404 530-••G	744	96.6	0.83	566	6.8	4043	1.2	2.3	6	24	3400	71
315	**M3HP**	**400 LKC**	3GHP 404 830-••G	744	96.6	0.83	566	6.8	4043	1.2	2.3	6	24	3400	71

The two bullets in the product code indicate choice of mounting arrangement, voltage and frequency (see ordering information)

Increased safety motors Ex e II T3

Technical data for totally enclosed squirrel cage three phase cast iron motors, acc. to VIK

ATEX Certified

IP 55, IC 411; Insulation class F, temperature rise class B

Output kW	Motor type	Product code	Speed r/min	Efficiency FL 100%	Power factor cos φ	Current I_N A	Current I_s/I_N	Torque T_N Nm	Torque T_s/T_N	Torque T_{max}/T_N	Time tE sec	Moment of inertia J = 1/4 GD²	Weight kg	Sound pressure level L_p dB(A)
3000 r/min = 2 poles				**380...420 V 50 Hz**										
7.5	**M3HP 160 MLB**	3GHP 161 420-••G	2945	89.9	0.91	14	7.6	24	3.0	3.7	14	0.047	156	69
10	**M3HP 160 MLC**	3GHP 161 430-••G	2947	92.1	0.92	18	8.1	32.5	2.9	3.7	10	0.054	167	69
12.5	**M3HP 160 MLD**	3GHP 161 440-••G	2935	92.5	0.92	23	7.5	40.5	2.8	3.4	7	0.059	173	69
15	**M3HP 180 MLB**	3GHP 181 420-••G	2952	92.5	0.91	27.5	7.3	48.5	2.4	3.3	8	0.092	210	69
20	**M3HP 200 MLC**	3GHP 201 430-••G	2960	93.1	0.89	37	7.1	65	2.9	3.9	10	0.21	305	72
24	**M3HP 200 MLE**	3GHP 201 450-••G	2959	93.7	0.89	44.5	6.9	77	3.0	3.9	9	0.22	310	72
28	**M3HP 225 SMC**	3GHP 221 230-••G	2963	93.3	0.91	51	7.1	90	2.1	3.1	9	0.34	385	74
36	**M3HP 250 SMB**	3GHP 251 220-••G	2969	94.4	0.90	64	6.8	116	1.9	2.7	11	0.66	475	74
3000 r/min = 2 poles				**400 V 50 Hz**										
47 [1]	**M3HP 280 SMA**	3GHP 281 210-••G	2982	93.7	0.91	80	7.1	151	1.2	3.0	17	0.8	625	77
58 [1]	**M3HP 280 SMB**	3GHP 281 220-••G	2975	94.3	0.92	97	7.0	186	1.2	2.8	12	0.9	665	77
68 [1]	**M3HP 315 SMA**	3GHP 311 210-••G	2982	94.3	0.90	116	7.2	218	0.9	2.8	10	1.2	880	78
80 [1]	**M3HP 315 SMB**	3GHP 311 220-••G	2980	94.8	0.91	134	7.0	256	0.8	2.7	10	1.4	940	78
110 [1]	**M3HP 315 SMC**	3GHP 311 230-••G	2978	95.4	0.91	183	7.0	353	0.9	2.7	8	1.7	1025	78
125 [1]	**M3HP 315 MLA**	3GHP 311 410-••G	2983	96.0	0.92	205	7.6	400	1.0	2.8	10	2.1	1190	78
1500 r/min = 4 poles				**380...420 V 50 Hz**										
10	**M3HP 160 MLC**	3GHP 162 430-••G	1468	91.2	0.83	20	7.5	65	2.8	3.4	16	0.09	166	62
13.5	**M3HP 160 MLE**	3GHP 162 450-••G	1469	91.8	0.83	26.5	7.7	88	3.0	3.6	8	0.121	189	68
15	**M3HP 180 MLB**	3GHP 182 420-••G	1476	92.8	0.82	30	7.1	97	2.6	3.3	16	0.191	214	66
17.5	**M3HP 180 MLC**	3GHP 182 430-••G	1477	92.5	0.83	35	7.0	113	2.7	3.2	10	0.239	233	66
24	**M3HP 200 MLA**	3GHP 202 410-••G	1480	92.7	0.87	46	7.8	155	2.0	3.2	14	0.3	280	73
30	**M3HP 225 SMB**	3GHP 222 220-••G	1481	93.6	0.88	57	6.9	193	1.8	2.6	17	0.45	365	74
36	**M3HP 225 SMC**	3GHP 222 230-••G	1480	93.6	0.89	66	7.3	232	1.7	3.1	8	0.53	390	74
44	**M3HP 250 SMB**	3GHP 252 220-••G	1482	94.6	0.88	81	6.6	284	1.3	3.0	15	0.98	470	73
1500 r/min = 4 poles				**400 V 50 Hz**										
58	**M3HP 280 SMA**	3GHP 282 210-••G	1484	94.6	0.88	100	7.6	373	1.3	2.9	8	1.25	625	68
70	**M3HP 280 SMB**	3GHP 282 220-••G	1484	94.9	0.89	120	7.2	450	1.4	2.9	7	1.5	665	68
84	**M3HP 315 SMA**	3GHP 312 210-••G	1489	95.6	0.88	145	7.0	539	1.2	2.9	14	2.3	900	73
100	**M3HP 315 SMB**	3GHP 312 220-••G	1489	95.8	0.88	171	7.6	641	1.2	2.9	10	2.6	960	73
115	**M3HP 315 SMC**	3GHP 312 230-••G	1488	95.9	0.89	196	6.7	738	1.1	2.7	10	2.9	1000	73
135	**M3HP 315 MLA**	3GHP 312 410-••G	1489	96.2	0.89	227	7.5	866	1.3	2.8	7	3.5	1160	73

[1] -3dB(A) sound pressure level reduction with unidirectional fan construction. Direction of rotation must be stated when ordering, see variant codes 044 and 045.

Data for frame sizes 355-400 on request.
Technical data for corresponding Ex e T2 VIK available on request.

Note: When ordering, following variant code has to be added:
421 VIK design.

The two bullets in the product code indicate choice of mounting arrangement, voltage and frequency (see ordering information)

Increased safety motors Ex e II T3

Technical data for totally enclosed squirrel cage three phase cast iron motors, acc. to VIK

ATEX Certified

IP 55, IC 411; Insulation class F, temperature rise class B

Output kW	Motor	type	Product code	Speed r/min	Effi-ciency FL 100%	Power factor cos φ	Current I_N A	Current I_s/I_N	Torque T_N Nm	Torque T_s/T_N	Torque T_{max}/T_N	Time tE sec	Moment of inertia J = 1/4 GD²	Weight kg	Sound pressure level L_p dB(A)
1000 r/min = 6 poles					**380...420 V 50 Hz**										
6.6	**M3HP**	**160 MLA**	3GHP 163 410-••G	973	89.4	0.79	14.2	7.1	65	2.1	3.4	15	0.088	160	57
9.7	**M3HP**	**160 MLC**	3GHP 163 430-••G	971	90.2	0.78	21.2	7.1	95	2.4	3.7	11	0.127	173	65
13.2	**M3HP**	**180 MLB**	3GHP 183 420-••G	975	91.3	0.80	27.5	7.2	129	1.7	3.0	15	0.221	233	67
16.5	**M3HP**	**200 MLB**	3GHP 203 420-••G	984	92.0	0.84	32	6.9	160	3.2	3.3	25	0.47	290	65
20	**M3HP**	**200 MLC**	3GHP 203 430-••G	983	92.3	0.84	39	6.9	194	3.0	2.7	16	0.52	305	65
27	**M3HP**	**225 SMC**	3GHP 223 230-••G	987	93.1	0.82	53	7.5	261	3.2	3.4	11	0.78	380	64
33	**M3HP**	**250 SMB**	3GHP 253 220-••G	989	93.8	0.86	63	7.3	319	2.7	2.9	10	1.6	465	65
1000 r/min = 6 poles					**400 V 50 Hz**										
40	**M3HP**	**280 SMA**	3GHP 283 210-••G	987	94.1	0.88	70	6.7	387	1.2	2.7	15	1.85	605	66
46	**M3HP**	**280 SMB**	3GHP 283 220-••G	988	94.2	0.88	80	7.0	445	1.3	2.7	11	2.2	645	66
64	**M3HP**	**315 SMA**	3GHP 313 210-••G	992	94.8	0.85	114	7.1	616	1.2	2.5	10	3.2	830	72
76	**M3HP**	**315 SMB**	3GHP 313 220-••G	992	95.0	0.87	133	7.3	731	1.2	2.3	8	4.1	930	72
92	**M3HP**	**315 SMC**	3GHP 313 230-••G	992	95.3	0.85	164	7.2	886	1.3	2.4	15	4.9	1000	72
110	**M3HP**	**315 MLA**	3GHP 313 410-••G	992	95.6	0.86	193	7.6	1059	1.3	2.5	7	5.8	1150	72
750 r/min = 8 poles					**380...420 V 50 Hz**										
3.5	**M3HP**	**160 MLA**	3GHP 164 410-••G	719	83.0	0.66	9.5	5.1	46	1.8	2.9	23	0.071	146	59
4.8	**M3HP**	**160 MLB**	3GHP 164 420-••G	719	85.5	0.70	12.1	5.5	64	1.8	2.9	21	0.09	160	53
6.6	**M3HP**	**160 MLC**	3GHP 164 430-••G	721	86.8	0.71	16.2	5.9	87	1.8	3.0	20	0.121	188	55
9.7	**M3HP**	**180 MLB**	3GHP 184 420-••G	726	89.8	0.74	22	5.8	127	1.7	2.8	20	0.239	227	63
13.2	**M3HP**	**200 MLB**	3GHP 204 420-••G	734	90.7	0.82	27	6.0	172	1.8	3.0	32	0.54	300	64
16.5	**M3HP**	**225 SMB**	3GHP 224 220-••G	736	91.4	0.80	34	6.6	214	2.0	3.0	25	0.68	350	65
20	**M3HP**	**225 SMC**	3GHP 224 230-••G	736	92.2	0.81	41	6.6	260	2.1	3.3	24	0.75	375	65
27	**M3HP**	**250 SMA**	3GHP 254 210-••G	736	92.2	0.82	54	6.3	350	1.9	2.8	16	1.25	420	59
750 r/min = 8 poles					**400 V 50 Hz**										
33	**M3HP**	**280 SMA**	3GHP 284 210-••G	740	93.3	0.80	64	6.9	426	1.4	2.8	12	1.85	605	65
40	**M3HP**	**280 SMB**	3GHP 284 220-••G	741	93.9	0.80	77	7.0	515	1.5	2.9	15	2.2	645	65
50	**M3HP**	**315 SMA**	3GHP 314 210-••G	744	94.5	0.79	97	7.1	642	1.2	2.5	15	3.2	830	62
68	**M3HP**	**315 SMB**	3GHP 314 220-••G	744	94.7	0.79	131	7.2	873	1.2	2.4	12	4.1	930	62
80	**M3HP**	**315 SMC**	3GHP 314 230-••G	744	95.1	0.80	152	7.7	1027	1.3	2.6	10	4.9	1000	64
95	**M3HP**	**315 MLA**	3GHP 314 410-••G	743	95.2	0.81	178	7.1	1221	1.1	2.3	7	5.8	1150	72

Data for frame sizes 355-400 on request.
Technical data for corresponding Ex e T2 VIK available on request.

Note: When ordering, following variant code has to be added:
421 VIK design.

The two bullets in the product code indicate choice of mounting arrangement, voltage and frequency (see ordering information)

Rating plates

The rating plate gives one current value for the voltage area. That is the highest current that can occur within the voltage area with the given output.

European standards require a special marking on safety motors. The marking shall include the following:
- type of protection
- apparatus group
- temperature class
- name of certifying body
- certificate number

For increased safety motors, marking shall also include:
- I_A/I_N
- t_E

M3AAL 90-100

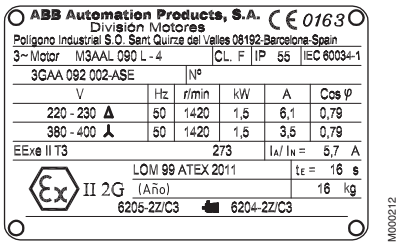

M3AAL 112-132

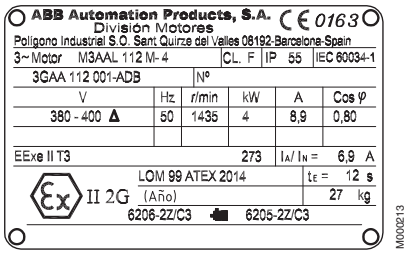

M3HP 80-400

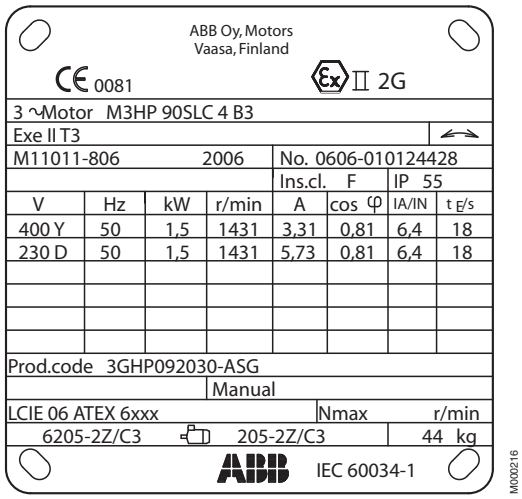

M3AAL 160-250

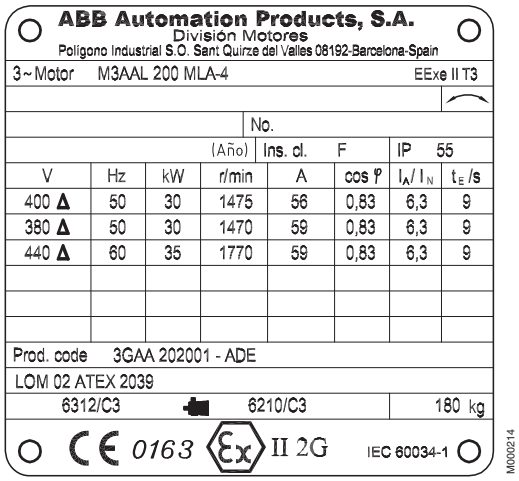

Increased safety aluminum motors - Variant codes

Code [1] / Variant		90	100	112	132	160	180	200	225	250	280
Balancing											
052	Vibration acc. to Grade A (IEC 60034-14).	S	S	S	S	S	S	S	S	S	S
417	Vibration acc. to Grade B (IEC 60034-14).	P	NA	P	P	P	P	P	P	P	P
424	Full key balancing.	P	P	P	P	P	P	P	P	P	P
Bearings and Lubrication											
036	Transport lock for bearings.	M	M	M	M	M	M	M	M	M	M
037	Roller bearing at D-end.	M	M	P	P	M	P	M	M	M	M
039	Cold resistant grease.	M	M	M	M	M	P	P	P	P	P
040	Heat resistant grease.	M	M	M	P	P	P	P	P	P	NA
041	Bearings regreasable via grease nipples.	M	M	P	P	P	P	P	S	S	S
042	Locked drive-end.	S	S	S	S	S	S	S	S	S	S
043	SPM nipples.	NA	NA	NA	NA	P	P	P	P	P	P
057	2RS bearings at both ends.	M	M	P	P	P	P	P	NA	NA	NA
058	Angular contact bearing at D-end, shaft force away from bearing.	P	P	P	P	P	P	P	NA	NA	NA
059	Angular contact bearing at N-end, shaft force towards bearing.	P	P	P	P	P	P	P	P	P	P
188	63-series bearings	M	M	M	M	S	S	S	S	S	S
796	Grease nipples JIS B 1575 PT 1/8 Type A	NA	NA	M	M	M	M	M	M	M	M
Branch standard designs											
142	“Manilla connection”	P	P	P	P	P	P	P	P	P	P
178	Stainless steel / acid proof bolts.	M	M	M	M	P	P	P	P	P	P
209	Non-standard voltage or frequency, (special winding).	P	P	P	P	P	P	P	P	P	P
217	Cast iron D-end shield (on aluminium motor).	M	M	M	M	M	M	M	M	M	NA
425	Corrosion protected stator and rotor core.	P	P	P	P	P	P	P	P	NA	P
Cooling system											
068	Metal fan.	M	M	M	M	M	M	M	M	M	M
075	Cooling method IC418 (without fan).	P	P	P	P	P	P	P	P	P	NA
183	Separate motor cooling (fan axial, N-end).	M	M	M	P	P	P	P	P	P	P
792	Metal fasteners for fan cover	NA	NA	NA	NA	M	M	M	M	M	M
Documentation											
141	Binding dimension drawing.	M	M	M	M	M	M	M	M	M	M
Drain holes											
065	Plugged existing drain holes.	M	M	M	M	M	M	M	M	M	M
Earthing Bolt											
067	External earthing bolt.	M	M	M	M	M	M	M	M	M	M
Hazardous Environments											
273	Ex e II acc. to ATEX directive 94/9/EC , temp. class T3	P	P	M	P	P	P	P	P	P	P
Heating elements											
450	Heating element, 100-120V.	M	M	M	M	M	M	M	M	M	P
451	Heating element, 200-240V.	M	M	M	M	M	M	M	M	M	P
Insulation system											
014	Winding insulation class H.	P	P	P	P	P	P	P	P	P	P
405	Special winding insulation for frequency converter supply.	P	P	P	P	P	P	P	P	P	P
Mounting arrangements											
007	IM 3001 flange mounted, IEC flange, from IM 1001 (B5 from B3).	M	M	M	NA	NA	M	M	M	NA	NA

[1] Certain variant codes cannot be used simultaneously.

S = Included as standard.
M = On modification of a stocked motor, or on new manufacture, the number per order may be limited.
P = New manufacture only.
R = On request.
NA = Not applicable.

4

Code [1] / Variant		90	100	112	132	160	180	200	225	250	280
008	IM 2101 foot/flange mounted, IEC flange, from IM 1001 (B34 from B3).	M	M	M	M	M	NA	NA	NA	NA	NA
009	IM 2001 foot/flange mounted, IEC flange, from IM 1001 (B35 from B3).	M	M	M	M	M	M	M	M	M	M
047	IM 3601 flange mounted, IEC flange, from IM 3001 (B14 from B5).	M	M	M	M	M	NA	NA	NA	NA	NA
048	IM 3001 flange mounted, IEC flange, from IM 3601 (B5 from B14).	M	M	M	M	M	NA	NA	NA	NA	NA
066	Modified for non-standard mounting position (please specify IM xxxx), (must be ordered for all mounting arrangements exluding IM B3 (1001) and IM B5 (3001).	M	M	M	M	M	M	M	M	M	M
091	(IM 2001) foot/flange mounted, DIN A-flange, from IM 1001 (B35 from B3).	M	M	NA	NA	NA	NA	NA	NA	NA	NA
093	IM 3601 flange mounted, IEC flange, from IM 1001 (B14 from B3).	M	M	M	NA	NA	NA	NA	NA	NA	NA
200	Flange ring holder.	M	M	M	M	M	M	NA	NA	NA	NA
218	Flange ring FT 85.	M	NA	NA	NA	NA	NA	NA	NA	NA	NA
219	Flange ring FT 100.	M	NA	NA	NA	NA	NA	NA	NA	NA	NA
220	Flange ring FF 100.	M	NA	NA	NA	NA	NA	NA	NA	NA	NA
223	Flange ring FF 115.	M	NA	NA	NA	NA	NA	NA	NA	NA	NA
224	Flange ring FT 115.	M	NA	NA	NA	NA	NA	NA	NA	NA	NA
226	Flange ring FF 130.	M	M	M	NA	NA	NA	NA	NA	NA	NA
227	Flange ring FT 130.	M	M	M	NA	NA	NA	NA	NA	NA	NA
229	Flange FT 130.	M	M	M	NA	NA	NA	NA	NA	NA	NA
233	Flange ring FF 165.	M	M	M	NA	NA	NA	NA	NA	NA	NA
234	Flange ring FT 165.	M	M	M	NA	NA	NA	NA	NA	NA	NA
235	Flange FF 165.	M	M	M	NA	NA	NA	NA	NA	NA	NA
236	Flange FT 165.	NA	NA	NA	M	NA	NA	NA	NA	NA	NA
243	Flange ring FF 215.	P	M	M	M	NA	NA	NA	NA	NA	NA
244	Flange ring FT 215.	NA	M	M	M	NA	NA	NA	NA	NA	NA
245	Flange FF 215.	NA	M	M	NA	NA	NA	NA	NA	NA	NA
253	Flange ring FF 265.	NA	NA	NA	M	NA	NA	NA	NA	NA	NA
254	Flange ring FT 265.	NA	NA	NA	M	NA	NA	NA	NA	NA	NA
255	Flange FF 265.	NA	NA	NA	M	M	NA	NA	NA	NA	NA
260	Flange FT 115.	M	M	NA	NA	NA	NA	NA	NA	NA	NA
262	Flange FF 300.	NA	NA	NA	NA	M	M	NA	NA	NA	NA
263	Flange FF 350.	NA	NA	NA	NA	NA	NA	M	NA	NA	NA
282	Flange FF 400.	NA	NA	NA	NA	NA	NA	NA	M	NA	NA
302	Flange FF 500.	NA	NA	NA	NA	NA	NA	NA	NA	M	M
306	IM 1001 foot mounted, from IM 3601 (B3 from B14).	M	M	M	NA	NA	NA	NA	NA	NA	NA
307	IM 2101 foot/flange mounted, IEC flange, from IM 3601 (B34 from B14).	M	M	M	NA	NA	NA	NA	NA	NA	NA
308	IM 2001 foot/flange mounted, IEC flange, from IM 3601 (B35 from B14).	M	M	M	NA	NA	NA	NA	NA	NA	NA
309	IM 1001 foot mounted, from IM 3001 (B3 from B5).	M	M	M	NA	NA	M	M	M	M	M
310	IM 2101 foot/flange mounted, IEC flange, from IM 3001 (B34 from B5).	M	M	M	NA	NA	NA	NA	NA	NA	NA
311	IM 2001 foot/flange mounted, IEC flange, from IM 3001 (B35 from B5).	M	M	M	NA	NA	M	M	M	M	M
312	IM 1001 foot mounted, from IM 2101 (B3 from B34).	M	M	M	NA	NA	NA	NA	NA	NA	NA
313	IM 3601 flange mounted, IEC flange, from IM 2101 (B14 from B34).	M	M	M	NA	NA	NA	NA	NA	NA	NA
314	IM 3001 flange mounted, IEC flange, from IM 2101 (B5 from B34).	M	M	M	NA	NA	NA	NA	NA	NA	NA
315	IM 2001 foot/flange mounted, IEC flange, from IM 2101 (B35 from B34).	M	M	M	NA	NA	NA	NA	NA	NA	NA

[1] Certain variant codes cannot be used simultaneously.

S = Included as standard.
M = On modification of a stocked motor, or on new manufacture, the number per order may be limited.
P = New manufacture only.
R = On request.
NA = Not applicable.

Code [1] / Variant		90	100	112	132	160	180	200	225	250	280
316	IM 1001 foot mounted, from IM 2001 (B3 from B35).	M	M	M	M	M	M	M	M	M	M
317	IM 3601 flange mounted, IEC flange, from IM 2001 (B14 from B35).	M	M	M	NA	NA	NA	NA	NA	NA	NA
318	IM 3001 flange mounted, IEC flange, from IM 2001 (B5 from B35).	M	M	M	NA	NA	M	NA	M	NA	NA
319	IM 2101 foot/flange mounted, IEC flange, from IM 2001 (B34 from B35).	M	M	M	NA	NA	NA	NA	NA	NA	NA
Painting											
114	Special paint colour, standard grade.	M	M	M	M	P	P	P	P	P	P
179	Special paint specification.	P	P	P	P	P	P	P	P	P	P
Protection											
005	Metal protective roof, vertical motor, shaft down.	M	M	M	M	M	M	M	M	M	M
072	Radial seal at D-end.	M	M	M	M	M	M	P	P	P	P
158	Degree of protection IP65.	M	M	M	P	P	P	P	P	P	P
211	Weather protected, IP xx W	P	P	P	P	P	P	P	P	P	P
403	Degree of protection IP56.	M	M	P	P	P	P	P	P	P	P
404	Degree of protection IP56, without fan and fan cover	P	P	P	P	P	P	NA	NA	NA	NA
784	Gamma-seal at D-end.	M	M	NA	NA	NA	NA	NA	NA	NA	NA
Rating & instruction plates											
002	Restamping voltage, frequency and output, continuous duty.	M	M	M	M	M	M	M	M	M	M
003	Individual serial number.	M	M	M	M	M	M	M	M	M	M
004	Additional text on std rating plate (max 12 digits on free text line)	NA	NA	M	M	NA	NA	NA	NA	NA	NA
095	Restamping output (maintained voltage, frequency), intermittent duty.	M	M	M	M	M	M	M	M	M	M
098	Stainless rating plate.	M	M	M	M	M	M	M	M	M	M
135	Mounting of additional identification plate, stainless.	M	M	M	M	M	M	M	M	M	M
138	Mounting of additional identification plate, aluminium.	M	M	M	M	M	M	M	M	M	M
139	Additional identification plate delivered loose.	M	M	M	M	M	M	M	M	M	M
160	Additional rating plate affixed.	M	M	M	M	M	M	P	P	P	P
161	Additional rating plate delivered loose.	M	M	M	M	M	M	M	M	M	M
162	Rating plate fixed to stator.	M	M	M	M	M	M	NA	NA	NA	NA
198	Aluminium rating plate.	S	S	M	M	S	S	S	S	S	S
Shaft & rotor											
069	Two shaft extensions as per basic catalogue.	P	P	P	P	P	P	P	P	P	P
070	One or two special shaft extensions, standard shaft material.	P	P	P	P	P	P	P	P	P	P
165	Shaft extension with open key-way.	P	P	NA	NA	NA	NA	NA	NA	NA	NA
410	Stainless steel shaft (standard or non-standard design).	P	P	P	P	P	P	P	P	P	P
Stator winding temperature sensors											
121	Bimetal detectors, break type (NCC), (3 in series), 130°C, in stator winding.	M	M	M	M	M	M	M	M	M	M
122	Bimetal detectors, break type (NCC), (3 in series), 150°C, in stator winding.	M	M	M	M	M	M	M	M	M	M
123	Bimetal detectors, break type (NCC), (3 in series), 170°C, in stator winding.	M	M	P	P	P	P	P	P	P	P
125	Bimetal detectors, break type (NCC), (2x3 in series), 150°C, in stator winding.	M	M	P	P	P	M	P	P	P	P
127	Bimetal detectors, break type (NCC), (3 in series, 130°C & 3 in series, 150°C), in stator winding.	M	M	P	P	P	P	P	P	P	P
321	Bimetal detectors, closing type (NO), (3 in parallel), 130°C, in stator winding.	M	M	M	M	M	M	M	M	M	M

[1] Certain variant codes cannot be used simultaneously.

S = Included as standard.
M = On modification of a stocked motor, or on new manufacture, the number per order may be limited.
P = New manufacture only.
R = On request.
NA = Not applicable.

4

Code [1] / Variant		90	100	112	132	160	180	200	225	250	280
322	Bimetal detectors, closing type (NO), (3 in parallel), 150°C, in stator winding.	M	M	M	M	M	M	M	M	M	M
323	Bimetal detectors, closing type (NO), (3 in parallel), 170°C, in stator winding.	P	P	P	P	P	P	NA	NA	NA	NA
325	Bimetal detectors, closing type (NO), (2x3 in parallel), 150°C, in stator winding.	P	P	P	P	P	P	NA	NA	NA	NA
327	Bimetal detectors, closing type (NO), (3 in parallel, 130°C & 3 in parallel, 150°C), in stator winding.	P	P	P	P	P	P	P	P	P	P
435	PTC - thermistors (3 in series), 130°C, in stator winding.	M	M	M	M	M	M	M	M	M	M
436	PTC - thermistors (3 in series), 150°C, in stator winding.	M	M	M	M	M	M	S	S	S	S
437	PTC - thermistors (3 in series), 170°C, in stator winding.	M	M	M	M	M	M	M	M	P	P
439	PTC - thermistors (2x3 in series), 150°C, in stator winding.	M	M	M	P	P	P	P	P	P	P
441	PTC - thermistors (3 in series, 130°C & 3 in series, 150°C), in stator winding.	M	M	P	M	P	P	P	P	P	P
Terminal box											
015	Motor supplied in D connection.	M	M	NA	NA	NA	NA	NA	NA	NA	NA
016	9 terminals in terminal box	P	P	P	P	P	P	NA	NA	NA	NA
017	Motor supplied in Y connection.	M	M	NA	NA	NA	NA	NA	NA	NA	M
018	D connection in terminal box (reconnection from Y), single phase Steinmetz.	M	M	NA	NA	NA	NA	NA	NA	NA	NA
019	Larger than standard terminal box	NA	NA	NA	NA	P	P	P	NA	NA	NA
021	Terminal box LHS (seen from D-end).	P	P	NA	NA	NA	NA	NA	P	P	P
112	Mounting of plug-in contact	NA	M	NA	NA	NA	NA	NA	NA	NA	NA
136	Extended cable connection, standard terminal box.	M	M	NA	NA	NA	NA	NA	NA	NA	NA
137	Extended cable connection, low terminal box, “Flying leads”.	P	P	P	P	P	P	NA	NA	NA	NA
180	Terminal box RHS (seen from D-end).	P	P	P	NA	NA	NA	P	M	P	P
230	Standard metal cable glands.	M	M	M	M	M	M	M	M	M	M
375	Standard plastic cable gland	M	M	M	M	M	M	M	M	M	M
376	Two standard plastic cable glands	M	M	M	M	NA	NA	M	M	M	M
418	Separate terminal box for auxiliaries, std. material	NA	NA	NA	NA	NA	P	NA	P	NA	NA
731	Two standard metal cable glands.	M	M	M	M	M	M	M	M	M	M
Testing											
145	Type test report from a catalogue motor, 400V 50Hz.	M	M	M	M	M	M	M	M	M	M
146	Type test with report for motor from specific delivery batch.	M	M	M	M	M	M	M	M	M	M
147	Type test with report for motor from specific delivery batch, customer witnessed.	M	M	M	M	M	M	M	M	M	M
148	Routine test report.	M	M	M	M	M	M	M	M	M	M
149	Test according to separate test specification.	M	M	M	M	M	M	M	M	M	M
153	Reduced test for classification society.	M	M	M	M	M	M	M	M	M	P
221	Type test and multi-point load test with report for motor from specific delivery batch.	M	M	M	M	M	M	M	M	M	M
222	Torque/speed curve, type test and multi-point load test with report for motor from specific delivery batch.	M	M	M	M	M	M	M	M	M	M
760	Vibration level test	M	M	M	M	M	M	NA	NA	NA	NA
762	Noise level test.	M	M	M	M	M	M	NA	NA	NA	NA
Variable speed drives											
704	EMC cable gland.	P	P	P	P	P	P	P	P	P	P
Y/D starting											
118	Terminals for Y/D start at high speed (two speed windings).	P	P	P	P	P	P	P	P	P	P

[1] Certain variant codes cannot be used simultaneously.

S = Included as standard.
M = On modification of a stocked motor, or on new manufacture, the number per order may be limited.
P = New manufacture only.
R = On request.
NA = Not applicable.

Increased safety cast iron motors - Variant codes

Code [1] / Variant		80	90	100	112	132	160	180	200	225	250	280	315	355	400
Balancing															
052	Vibration acc. to Grade A (IEC 60034-14).	S	S	S	S	S	S	S	S	S	S	S	S	S	S
417	Vibration acc. to Grade B (IEC 60034-14).	P	P	P	P	P	P	P	P	P	P	P	P	P	P
424	Full key balancing.	P	P	P	P	P	P	P	P	P	P	P	P	P	P
Bearings and Lubrication															
036	Transport lock for bearings.	NA	NA	NA	NA	NA	P	P	P	P	P	P	P	P	P
037	Roller bearing at D-end.	NA	NA	NA	NA	NA	P	P	P	P	P	P	P	NA	NA
040	Heat resistant grease.	S	S	S	S	S	S	S	S	S	S	S	S	S	S
041	Bearings regreasable via grease nipples.	NA	NA	NA	NA	NA	S	S	S	S	S	S	S	S	S
043	SPM nipples.	NA	NA	NA	NA	NA	S	S	S	S	S	S	S	S	S
058	Angular contact bearing at D-end, shaft force away from bearing.	NA	NA	NA	NA	NA	P	P	P	P	P	P	P	P	P
107	Pt100 2-wire in bearings	NA	NA	NA	NA	NA	P	P	P	P	P	P	P	P	P
130	Pt100 3-wire in bearings	NA	NA	NA	NA	NA	P	P	P	P	P	P	P	P	P
194	2Z bearings greased for life at both ends	S	S	S	S	S	P	P	P	P	P	NA	NA	NA	NA
433	Outlet grease collector	NA	NA	NA	NA	NA	NA	NA	NA	NA	NA	P	P	P	P
796	Grease nipples JIS B 1575 PT 1/8 Type A	NA	NA	NA	NA	NA	P	P	P	P	P	P	P	P	P
797	Stainless steel SPM Nipples	NA	NA	NA	NA	NA	P	P	P	P	P	P	P	P	P
798	Stainless steel grease nipples	NA	NA	NA	NA	NA	P	P	P	P	P	P	P	P	P
Brakes															
412	Built-on brake.	NA	NA	NA	NA	NA	NA	NA	NA	NA	NA	NA	NA	NA	NA
Branch standard designs															
178	Stainless steel / acid proof bolts.	S	S	S	S	S	P	P	P	P	P	P	P	P	P
204	Jacking bolts for foot mounted motors	NA	NA	NA	NA	NA	P	P	P	P	P	P	P	S	S
209	Non-standard voltage or frequency, (special winding).	R	R	R	R	R	P	P	P	P	P	P	P	P	P
425	Corrosion protected stator and rotor core.	S	S	S	S	S	S	S	S	S	S	P	P	P	P
786	Special design shaft upwards (V3, V36, V6) for outdoor mounting.	P	P	P	P	P	P	P	P	P	P	R	R	NA	NA
Cooling system															
044	Unidirectional fan, clockwise seen from D-end. 2-pole motors only.	NA	NA	NA	NA	NA	NA	NA	NA	NA	NA	P	P	P	S
045	Unidirectional fan, counter clockwise seen from D-end. 2-pole motors only.	NA	NA	NA	NA	NA	NA	NA	NA	NA	NA	P	P	P	S
068	Metal fan.	P	P	P	P	P	P	P	P	P	P	P	P	P	P
183	Separate motor cooling (fan axial, N-end).	NA	NA	NA	NA	NA	R	R	R	R	R	R	R	R	R
422	Separate motor cooling (fan top or side, N-end).	NA	NA	NA	NA	NA	NA	NA	NA	NA	NA	R	R	R	R
791	Stainless steel fan cover	NA	NA	NA	NA	NA	NA	NA	NA	P	P	P	P	P	P
Coupling															
035	Assembly of customer supplied coupling-half.	NA	NA	NA	NA	NA	P	P	P	P	P	P	P	P	P
Documentation															
141	Binding dimension drawing.	P	P	P	P	P	P	P	P	P	P	P	P	P	P
Drain holes															
065	Plugged existing drain holes.	NA	NA	NA	NA	NA	P	P	P	P	P	P	P	P	P
448	Draining holes with metal plugs.	NA	NA	NA	NA	NA	P	P	P	P	P	P	P	P	P

[1] Certain variant codes cannot be used simultaneously.

S = Included as standard.
M = On modification of a stocked motor, or on new manufacture, the number per order may be limited.
P = New manufacture only.
R = On request.
NA = Not applicable.

4

Code [1] / Variant		80	90	100	112	132	160	180	200	225	250	280	315	355	400
Hazardous Environments															
272	Ex e II acc. to ATEX directive 94/9/EC , temp. class T2	NA	NA	NA	NA	NA	P	P	P	P	P	P	P	P	P
Heating elements															
450	Heating element, 100-120V.	P	P	P	P	P	P	P	P	P	P	P	P	P	P
451	Heating element, 200-240V.	P	P	P	P	P	P	P	P	P	P	P	P	P	P
Mounting arrangements															
008	IM 2101 foot/flange mounted, IEC flange, from IM 1001 (B34 from B3).	P	P	P	P	P	NA	NA	NA	NA	NA	NA	NA	NA	NA
009	IM 2001 foot/flange mounted, IEC flange, from IM 1001 (B35 from B3).	P	P	P	P	P	P	P	P	P	P	P	P	P	P
047	IM 3601 flange mounted, IEC flange, from IM 3001 (B14 from B5).	P	P	P	P	P	NA	NA	NA	NA	NA	NA	NA	NA	NA
066	Modified for non-standard mounting position (please specify IM xxxx), (must be ordered for all mounting arrangements exluding IM B3 (1001) and IM B5 (3001).	P	P	P	P	P	P	P	P	P	P	P	P	P	P
228	Flange FF 130.	P	P	P	P	NA	NA	NA	NA	NA	NA	NA	NA	NA	NA
229	Flange FT 130.	P	P	P	P	NA	NA	NA	NA	NA	NA	NA	NA	NA	NA
235	Flange FF 165.	NA	NA	NA	NA	P	NA	NA	NA	NA	NA	NA	NA	NA	NA
236	Flange FT 165.	NA	NA	NA	NA	P	NA	NA	NA	NA	NA	NA	NA	NA	NA
245	Flange FF 215.	NA	NA	P	P	P	NA	NA	NA	NA	NA	NA	NA	NA	NA
246	Flange FT 215.	NA	NA	P	P	P	NA	NA	NA	NA	NA	NA	NA	NA	NA
255	Flange FF 265.	NA	NA	NA	NA	P	NA	NA	NA	NA	NA	NA	NA	NA	NA
256	Flange FT 265.	NA	NA	NA	NA	P	NA	NA	NA	NA	NA	NA	NA	NA	NA
257	Flange FF 100.	P	NA	NA	NA	NA	NA	NA	NA	NA	NA	NA	NA	NA	NA
258	Flange FT 100.	P	NA	NA	NA	NA	NA	NA	NA	NA	NA	NA	NA	NA	NA
259	Flange FF 115.	P	P	NA	NA	NA	NA	NA	NA	NA	NA	NA	NA	NA	NA
260	Flange FT 115.	P	P	NA	NA	NA	NA	NA	NA	NA	NA	NA	NA	NA	NA
305	Additional lifting lugs.	NA	NA	NA	NA	NA	NA	NA	NA	NA	NA	P	P	P	P
306	IM 1001 foot mounted, from IM 3601 (B3 from B14).	P	P	P	P	P	NA	NA	NA	NA	NA	NA	NA	NA	NA
309	IM 1001 foot mounted, from IM 3001 (B3 from B5).	P	P	P	P	P	NA	NA	NA	NA	NA	NA	NA	NA	NA
Painting															
106	Paint thickness = 80 µm.	S	S	S	S	S	S	S	S	S	S	S	S	S	S
109	Paint thickness = 120 µm.	P	P	P	P	P	P	P	P	P	P	P	P	P	P
110	Paint thickness = 160 µm.	P	P	P	P	P	P	P	P	P	P	P	P	P	P
111	Offshore two-pack polyamide cured epoxy paint 160 µm.	P	P	P	P	P	P	P	P	P	P	P	P	P	P
114	Special paint colour, standard grade.	P	P	P	P	P	P	P	P	P	P	P	P	P	P
115	Offshore zink primer painting.	P	P	P	P	P	P	P	P	P	P	P	P	P	P
179	Special paint specification.	R	R	R	R	R	R	R	R	R	R	R	R	R	R
Protection															
005	Metal protective roof, vertical motor, shaft down.	P	P	P	P	P	P	P	P	P	P	P	P	P	P
072	Radial seal at D-end.	P	P	P	P	P	P	P	P	P	P	P	P	NA	NA
073	Sealed against oil at D-end.	P	P	P	P	P	P	P	P	P	P	P	P	P	P
158	Degree of protection IP65.	P	P	P	P	P	P	P	P	P	P	P	P	P	P
211	Weather protected, IP xx W	R	R	R	R	R	R	R	R	R	R	R	R	R	R
403	Degree of protection IP56.	P	P	P	P	P	P	P	P	P	P	P	P	P	P
434	Degree of protection IP56, open deck.	NA	NA	NA	NA	NA	P	P	P	P	P	P	P	P	P
783	Labyrinth sealing at D-end.	P	P	P	P	P	P	P	P	P	P	P	P	S	S

[1] Certain variant codes cannot be used simultaneously.

S = Included as standard.
M = On modification of a stocked motor, or on new manufacture, the number per order may be limited.
P = New manufacture only.
R = On request.
NA = Not applicable.

Code [1] / Variant		80	90	100	112	132	160	180	200	225	250	280	315	355	400
Rating & instruction plates															
002	Restamping voltage, frequency and output, continuous duty.	R	R	R	R	R	P	P	P	P	P	P	P	P	P
135	Mounting of additional identification plate, stainless.	P	P	P	P	P	P	P	P	P	P	P	P	P	P
139	Additional identification plate delivered loose.	P	P	P	P	P	P	P	P	P	P	P	P	P	P
161	Additional rating plate delivered loose.	P	P	P	P	P	P	P	P	P	P	P	P	P	P
Shaft & rotor															
069	Two shaft extensions as per basic catalogue.	R	R	R	R	R	P	P	P	P	P	P	P	P	P
070	One or two special shaft extensions, standard shaft material.	P	P	P	P	P	P	P	P	P	P	P	P	P	P
164	Shaft extension with closed key-way.	S	S	S	S	S	S	S	S	S	S	R	R	R	R
165	Shaft extension with open key-way.	P	P	P	P	P	R	R	R	R	R	S	S	S	S
410	Stainless steel shaft (standard or non-standard design).	R	R	R	R	R	R	R	R	R	R	P	P	P	P
Standards and Regulations															
421	VIK design (Verband der industriellen Energie- und Kraftwirtschaft e.V.)	P	P	P	P	P	P	P	P	P	P	P	P	P	P
773	EEMUA No 132 1988 design	R	R	R	R	R	R	R	R	R	R	R	R	R	R
774	Design according to NORSOK (Norwegian Territorial Waters).	P	P	P	P	P	P	P	P	P	P	P	P	P	P
775	Design according to SHELL DEP 33.66.05.31-Gen. January 1999 design.	P	P	P	P	P	P	P	P	P	P	P	P	P	P
Stator winding temperature sensors															
435	PTC - thermistors (3 in series), 130°C, in stator winding.	S	S	S	S	S	S	S	S	S	S	S	S	S	S
440	PTC - thermistors (3 in series, 110°C & 3 in series, 130°C), in stator winding.	P	P	P	P	P	P	P	P	P	P	P	P	P	P
445	Pt-100 2-wire in stator winding, 1 per phase	P	P	P	P	P	P	P	P	P	P	P	P	P	P
446	Pt-100 2-wire in stator winding, 2 per phase	NA	NA	NA	NA	NA	P	P	P	P	P	P	P	P	P
502	Pt-100 3-wire in stator winding, 1 per phase	P	P	P	P	P	P	P	P	P	P	P	P	P	P
503	Pt-100 3-wire in stator winding, 2 per phase	NA	NA	NA	NA	NA	P	P	P	P	P	P	P	P	P
Terminal box															
021	Terminal box LHS (seen from D-end).	NA	NA	NA	NA	NA	P	P	P	P	P	P	P	P	P
137	Extended cable connection, low terminal box, “Flying leads”.	NA	NA	NA	NA	NA	P	P	P	P	P	P	P	P	P
157	Terminal box degree of protection IP65.	P	P	P	P	P	P	P	P	P	P	P	P	P	P
180	Terminal box RHS (seen from D-end).	NA	NA	NA	NA	NA	P	P	P	P	P	P	P	P	P
187	Cable glands of non-standard design.	NA	NA	NA	NA	NA	R	R	R	R	R	R	R	R	R
380	Separate terminal box for temperature detectors, std. material	NA	NA	NA	NA	NA	P	P	P	P	P	P	P	P	P
400	4 x 90 degr turnable terminal box	S	S	S	S	S	P	P	S	S	S	S	S	S	S
402	Terminal box adapted for Al cables.	NA	NA	NA	NA	NA	NA	NA	NA	NA	NA	S	S	S	S
413	Extended cable connection, no terminal box.	NA	NA	NA	NA	NA	NA	NA	NA	NA	NA	P	P	P	P
418	Separate terminal box for auxiliaries, std. material	NA	NA	NA	NA	NA	P	P	P	P	P	P	P	P	P
466	Terminal box at N-end.	NA	NA	NA	NA	NA	R	R	P	P	P	P	P	P	P
468	Cable entry from D-end.	P	P	P	P	P	P	P	P	P	P	P	P	P	P
469	Cable entry from N-end.	P	P	P	P	P	P	P	P	P	P	P	P	P	P
567	Separate terminal box material: Cast Iron	NA	NA	NA	NA	NA	P	P	P	P	P	P	P	P	P
568	Separate terminal box for heating elements, std. material	NA	NA	NA	NA	NA	P	P	P	P	P	P	P	P	P
569	Separate terminal box for brakes	NA	NA	NA	NA	NA	P	P	P	P	P	P	P	P	P

[1] Certain variant codes cannot be used simultaneously.

S = Included as standard.
M = On modification of a stocked motor, or on new manufacture, the number per order may be limited.

P = New manufacture only.
R = On request.
NA = Not applicable.

4

Code [1] / Variant		80	90	100	112	132	160	180	200	225	250	280	315	355	400
730	Prepared for NPT cable glands	P	P	P	P	P	P	P	P	P	P	P	P	P	P
732	Standard cable gland, EEx d IIB, armoured cable.	P	P	P	P	P	P	P	P	P	P	P	P	P	P
733	Standard cable gland, EEx d IIB, non-armoured cable.	P	P	P	P	P	P	P	P	P	P	P	P	P	P
736	Standard cable gland EEx e acc. to EN-Standards	S	S	S	S	S	S	S	S	S	S	S	S	S	S
737	Standard cable gland EEx e with clamping device acc. to EN-Standards	P	P	P	P	P	P	P	P	P	P	P	P	P	P
743	Painted flange for cable glands	P	P	P	P	P	P	P	P	P	P	P	P	P	P
744	Stainless steel flange for cable glands	P	P	P	P	P	P	P	P	P	P	P	P	P	P
745	Painted steel flange equipped with brass cable glands	P	P	P	P	P	P	P	P	P	P	P	P	P	P
746	Stainless steel cable flange equipped with standard brass cable glands	P	P	P	P	P	P	P	P	P	P	P	P	P	P
Testing															
145	Type test report from a catalogue motor, 400V 50Hz.	P	P	P	P	P	P	P	P	P	P	P	P	P	P
146	Type test with report for motor from specific delivery batch.	P	P	P	P	P	P	P	P	P	P	P	P	P	P
147	Type test with report for motor from specific delivery batch, customer witnessed.	P	P	P	P	P	P	P	P	P	P	P	P	P	P
148	Routine test report.	P	P	P	P	P	P	P	P	P	P	P	P	P	P
150	Customer witnessed testing. Specify test procedure with other codes.	P	P	P	P	P	P	P	P	P	P	P	P	P	P
157	Terminal box degree of protection IP65.	P	P	P	P	P	P	P	P	P	P	P	P	P	P
221	Type test and multi-point load test with report for motor from specific delivery batch.	P	P	P	P	P	P	P	P	P	P	R	R	R	R
222	Torque/speed curve, type test and multi-point load test with report for motor from specific delivery batch.	P	P	P	P	P	P	P	P	P	P	P	P	P	P
760	Vibration level test	P	P	P	P	P	P	P	P	P	P	P	P	P	P
761	Vibration spectrum test.	P	P	P	P	P	P	P	P	P	P	P	P	P	P
762	Noise level test.	P	P	P	P	P	P	P	P	P	P	P	P	P	P
763	Noise spectrum test.	P	P	P	P	P	R	R	R	R	R	P	P	P	P
Y/D starting															
117	Terminals for Y/D start at both speeds (two speed windings).	NA	NA	NA	NA	NA	R	R	R	R	R	P	P	R	R
118	Terminals for Y/D start at high speed (two speed windings).	NA	NA	NA	NA	NA	R	R	R	R	R	P	P	R	R
119	Terminals for Y/D start at low speed (two speed windings).	NA	NA	NA	NA	NA	R	R	R	R	R	P	P	R	R

[1] Certain variant codes cannot be used simultaneously.

S = Included as standard.
M = On modification of a stocked motor, or on new manufacture, the number per order may be limited.
P = New manufacture only.
R = On request.
NA = Not applicable.

Increased safety motors, aluminum frame

Dimension drawings

Foot-mounted motor IM 1001, IM B3

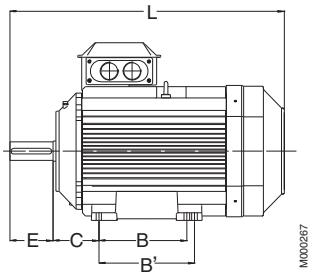

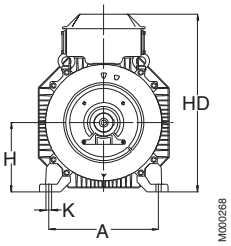

Flange-mounted motor IM 3001, IM B5

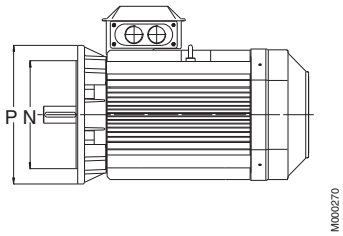

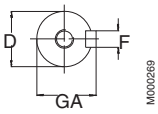

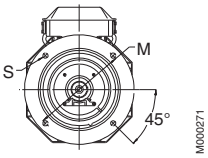

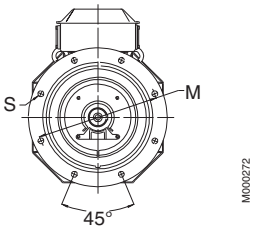

Flanges

Sizes 90-200

Sizes 225-250

	IM 1001, IM B3 AND IM 3001, IM B5											IM 1001, IM B3							IM 3001, IM B5			
Motor size	D poles		GA poles		F poles		E poles		L max poles		O	A	B	B'	C	HD	K	H	M	N	P	S
	2	4-8	2	4-8	2	4-8	2	4-8	2	4-8												
90 S	24	24	27	27	8	8	50	50	282	282	30	140	100	–	56	212	10	90	165	130	200	12
90 L	24	24	27	27	8	8	50	50	307	307	30	140	125	–	56	212	10	90	165	130	200	12
100 L	28	28	31	31	8	8	60	60	349	349	35	160	140	–	63	236	12	100	215	180	250	15
112 M	28	28	31	8	8	8	60	60	361	361	35	190	140	–	70	258	12	112	215	180	250	14.5
132	38	41	41	41	10	10	80	80	447	447	50	216	140	178	89	295.5	12	132	265	230	300	14.5
160 M	42	42	45	45	12	12	110	110	602.5	602.5	50	254	210	254	108	370	15	160	300	250	350	19
160 L	42	42	45	45	12	12	110	110	643.5	643.5	50	254	210	254	108	370	15	160	300	250	350	19
180 M	48	51.5	51.5	51.5	14	14	110	110	680	680	50	279	241	279	121	405	15	180	300	250	350	19
180 L	48	51.5	51.5	51.5	14	14	110	110	700.5	700.5	50	279	241	279	121	405	15	180	300	250	350	19
200 ML	55	55	59	59	16	16	110	110	773	773	50	318	267	305	133	496.5	18	200	350	300	400	19
225 SM	55	60	59	64	16	18	110	110	835	865	60	356	286	311	149	542	18	225	400	350	450	19
250 SM	60	65	64	69	18	18	140	140	872	872	60	406	311	349	168	590	22	250	500	450	550	19
280	65	75	69	79.5	18	20	140	140	875	875	60	457	368	419	190	656	24	280	500	450	550	19

IM 3601, IM B14

Motor size	M	N	P	S
90	115	95	140	M8
100	130	100	160	M8
112	130	110	160	M8
132	165	130	200	M10

Tolerances:

A, B	± 0,8
D, DA	ISO k6 < Ø 50mm ISO m6 > Ø 50mm
F, FA	ISO h9
H	-0.5
N	ISO j6
C, CA	± 0.8

Above table gives the main dimensions in mm.

For detailed drawings please check our web-site, 'www.abb.com/motors&generators' or contact ABB.

Increased safety motors, cast iron frame

Dimension drawings

Foot-mounted motor IM 1001, IM B3

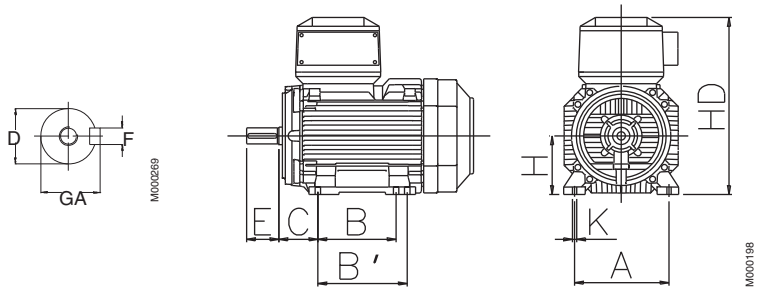

Protective roof, variant code 005

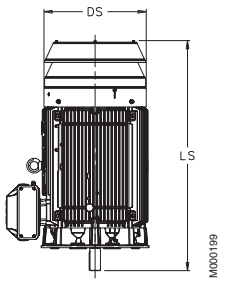

Flange-mounted motor IM 3001, IM B5

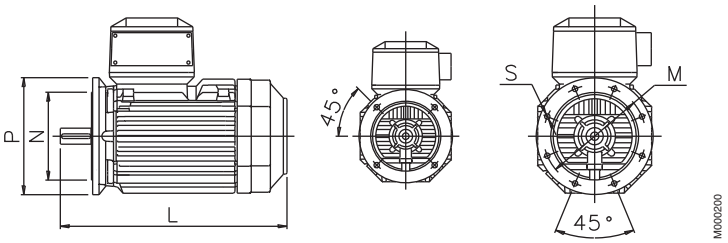

Sizes 80-200 Sizes 225-400

4

	IM 1001, IM B3 AND IM 3001, IM B5											IM 1001, IM B3							IM 3001, IM B5				Protective roof		
Motor size	D poles		GA poles		F poles		E poles		L max poles		O	A	B	B'	C	HD	K	H	M	N	P	S	DS	LS poles	
	2	4-8	2	4-8	2	4-8	2	4-8	2	4-8														2	4-8
80	19	19	21.5	21.5	6	6	40	40	340	340	20	125	100	125	50	235	10	80	165	130	200	12	160	360	360
90	24	24	27	27	8	8	50	50	405	405	20	140	100	125	56	260	10	90	165	130	200	12	180	430	430
100	28	28	31	31	8	8	60	60	440	440	25	160	140	–	63	280	12	100	215	180	250	14.5	195	465	465
112	28	28	31	31	8	8	60	60	440	440	25	190	140	–	70	295	12	112	215	180	250	14.5	195	465	465
132	38	38	41	41	10	10	80	80	540	540	30	216	140	178	89	340	12	132	265	230	300	14.5	260	570	570
160	42	42	45	45	12	12	110	110	711	711	45	254	210	254	108	388	14.5	160	300	250	350	18.5	328	756	756
180	48	48	51.5	51.5	14	14	110	110	706	706	50	279	241	279	121	426	14.5	180	300	250	350	18.5	359	756	756
200	55	55	59	59	16	16	110	110	774	774	70	318	267	305	133	536	18.5	200	350	300	400	18.5	414	844	844
225	55	60	59	64	16	18	110	140	841	871	80	356	286	311	149	583	18.5	225	400	350	450	18.5	462	921	951
250	60	65	64	69	18	18	140	140	875	875	90	406	311	349	168	646	24	250	500	450	550	18.5	506	965	965
280	65	75	69	79.5	18	20	140	140	1088	1088	100	457	368	419	190	759	24	280	500	450	550	18	555	1190	1190
315 SM_	65	80	69	85	18	22	140	170	1174	1204	115	508	406	457	216	852	30	315	600	550	660	23	624	1290	1320
315 ML_	65	90	69	95	18	25	140	170	1285	1315	115	508	457	508	216	852	30	315	600	550	660	23	624	1401	1431
355 SM_	70	100	62.5	90	20	28	140	210	1409	1479	130	610	500	560	254	958	35	355	740	680	800	23	720	1476	1546
355 ML_	70	100	62.5	90	20	28	140	210	1514	1584	130	610	560	630	254	958	35	355	740	680	800	23	720	1528	1703
355 LK_	70	100	62.5	90	20	28	140	210	1764	1834	130	610	710	900	254	958	35	355	740	680	800	23	720	1633	1703
400 L_	80	110	85	126	22	28	170	210	1851	1891	150	710	900	1000	224	1045	35	400	940	880	1000	28	810	1860	1900
400 LK_	80	100	85	106	22	28	170	210	1851	1891	150	686	710	800	280	1045	35	400	740	680	800	24	810	1860	1900

IM 3601, B14 - Available flange alternatives ; see also variant codes.

Flange size	Variant code	Flange dimensions P	M	N	S	Motor size 80-132 80	90	100	112	132
FT100	258	120	100	80	M6	S	NA	NA	NA	NA
FT115	260	140	115	95	M8	P	S	NA	NA	NA
FT130	229	160	130	110	M8	P	P	S	S	NA
FT165	236	200	165	130	M10	NA	NA	NA	NA	S
FT215	246	250	215	180	M12	NA	NA	P	P	P
FT265	256	300	265	230	M12	NA	NA	NA	NA	P
FT100	257	120	100	80	M7	S	M	NA	NA	NA
FT115	259	140	115	95	M10	M	S	NA	NA	NA
FT130	228	160	130	110	M10	M	M	S	S	NA
FT165	235	200	165	130	M12	M	M	M	M	S
FT215	245	250	215	180	M14.5	NA	NA	M	M	M
FT265	255	300	265	230	M14.5	NA	NA	NA	NA	M

S = Standard flange
M = Option
NA = Not possible

Tolerances:

A, B	± 0,8
D, DA	ISO k6 < Ø 50mm
	ISO m6 > Ø 50mm
F, FA	ISO h9
H	-0.5
N	ISO j6
C, CA	± 0.8

Above table gives the main dimensions in mm.

For detailed drawings please check our web-site 'www.abb.com/motors&generators' or contact ABB.

Dimension drawings

Increased safety motors, cast iron frame

Terminal boxes, standard design with 6 terminals

Motor sizes 80 - 132

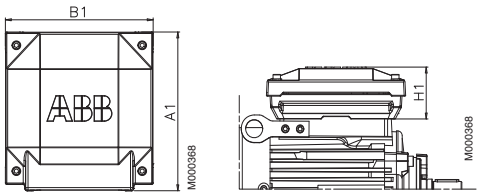

Motor sizes 160 - 180

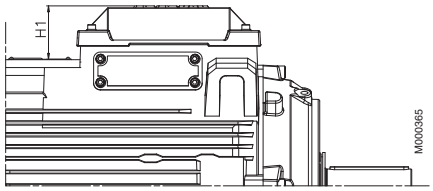

Motor sizes 200 - 250

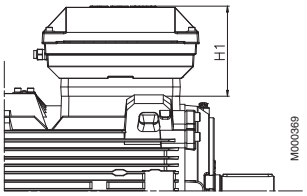

Motor sizes 280 - 315,
Top- and side-mounted
Terminal boxes 210,370

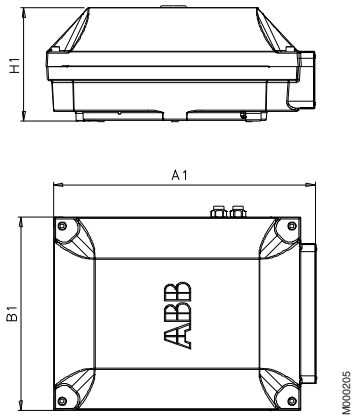

Motor sizes 355 - 400
Top-mounted
Terminal box 750 + adapter

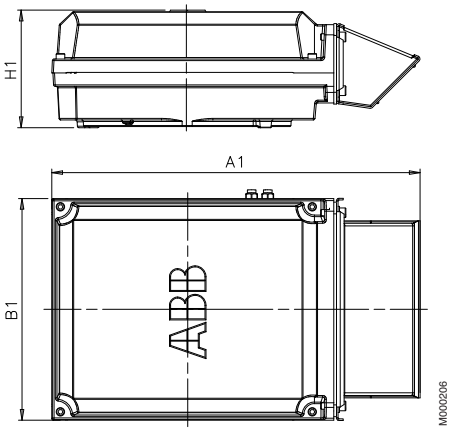

Motor sizes 355 - 400,
Side-mounted
Terminal box 750

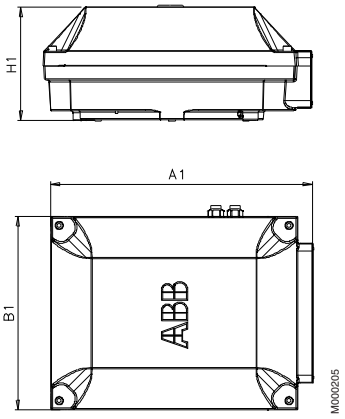

Terminal box according to EN:

Motor size	Terminal box	A1	B1	H1
80-132		202	188	66
160-180		234	234	68
200-250		352	319	147
280-400	210	416	306	177
	370	451	347	200
	750 top-mounted	686	413	219
	750 side-mounted	525	413	219

Terminal box according to VIK:

Motor size	Terminal box	A1	B1	H1
80-132		202	188	66
160-180		244	240	128
200-250		352	319	147
280-400	210	416	306	177
	370	451	347	200
	750 top-mounted	686	413	219
	750 side-mounted	525	413	219

For motor dimensions please see dimension drawings on earlier pages.

Increased safety motor construction

Typical exploded view of cast iron motors, frame size 315

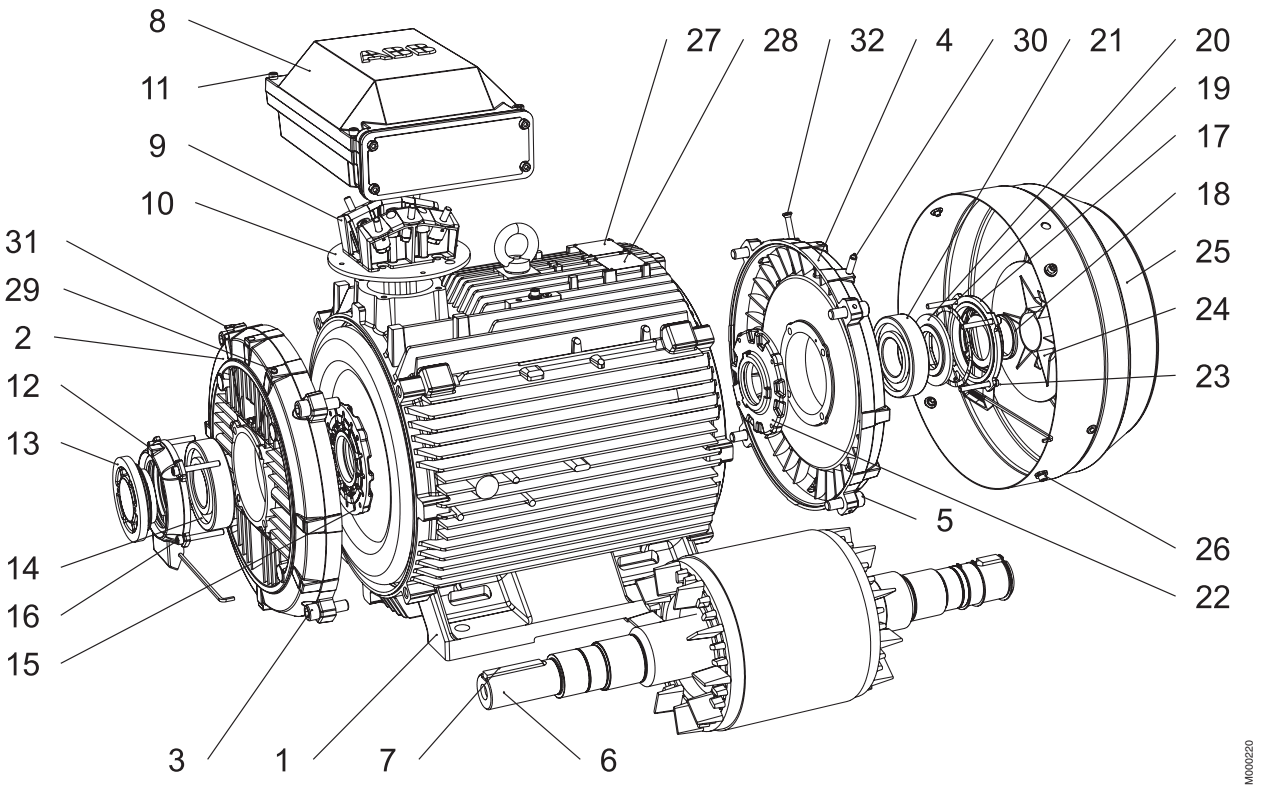

4

1	Stator frame
2	Endshield, D-end
3	Screws for endshield, D-end
4	Endshield, N-end
5	Screws for endshield, N-end
6	Rotor with shaft
7	Key, D-end
8	Terminal box
9	Terminal board
10	Intermediate flange
11	Screws for terminal box cover
12	Outer bearing cover, D-end
13	Valve disc with labyrinth seal, D-end; standard in 2-pole motors (V-ring in 4-8 pole)
14	Bearing, D-end
15	Inner bearing cover, D-end
16	Screws for bearing cover, D-end
17	Outer bearing cover, N-end
18	Seal, N-end
19	Wave spring
20	Valve disc, N-end
21	Bearing, N-end
22	Inner bearing cover, N-end
23	Screws for bearing cover, N-end
24	Fan
25	Fan cover
26	Screws for fan cover
27	Rating plate
28	Regreasing plate
29	Grease nipple, D-end
30	Grease nipple, N-end
31	SPM nipple, D-end
32	SPM nipple, N-end

Certificate examples

M000221

LCIE

1 **ATTESTATION D'EXAMEN CE DE TYPE**

2 Appareils et systèmes de protection destinés à être utilisés en atmosphères explosibles
Directive 94/9/CE

3 Numéro de l'attestation CE de type
LCIE 02 ATEX 6071

4 Appareil ou système de protection :
Moteur triphasé à courant alternatif
Type : M3HP 280…

5 Demandeur : ABB OY, Electrical Machines, LV Motors

6 Adresse : Strombergin Puistotie 5
FIN 65100 VAASA FINLANDE

7 Cet appareil ou système de protection et ses variantes … de la … fs citées

… 0081 … CE du … certifie … me aux … té et la … s et de … és en … l de la … s notre

… erne la … té aux

… éro de … me de … ur une … résente

… uement … ystème … 9/CE. … e sont

1 **EC TYPE EXAMINATION CERTIFICATE**

2 Equipment or protective system intended for use in potentially explosive atmospheres
Directive 94/9/CE

3 EC type Examination Certificate number
LCIE 02 ATEX 6071

4 Equipment or protective system :
Tree-phase AC motor
Type : M3HP 280…

5 Applicant : ABB OY, Electrical Machines, LV Motors

6 Address : Strombergin Puistotie 5
FIN 65100 VAASA FINLANDE

7 This equipment or protective system and any acceptable variation thereto is specified in the schedule to this certificate and the documents therein referred to.

8 LCIE, notified body number 0081 in accordance with article 9 of the Directive 94/9/CE of the European Parliament and Council of 23 March 1994. certifies that this equipment or protective system has been found to comply with the essential Health and Safety Requirements relating to the design and construction of equipment and protective system intended for use in potentially explosive atmospheres, given in Annex II to of the Directive. The examination and test results are recorded in confidential report No 41 725 010 A.

9 Compliance with the Essential Health and Safety Requirements been assured by compliance with :

- EN 50014(1997)
- EN 50019 (2000)

10 If the sign X is placed after the certificate number, it indicates that the equipment or protective system is subject to special conditions for safe use specified in the schedule to this certificate.

11 This EC Type examination certificate relates only to the design and construction of this specified equipment or protective system in accordance with the Directive 94/9/EC. Further requirements of the Directive apply to the

LABORATORIO OFICIAL J. M. MADARIAGA

LOM

(1) **CERTIFICADO DE EXAMEN CE DE TIPO**

(2) Equipos y sistemas de protección destinados a ser utilizados en atmósferas potencialmente explosivas.
Directiva 94/9/CE

(3) Certificado de Examen CE de Tipo **LOM 02ATEX2039**

(4) Equipo o sistema de protección — Motores eléctricos
Tipos M3AAL 200 MLA-2, M3AAL 200 MLA-4, M3AAL 225 SMB-2
M3AAL 225 SMA-4, M3AAL 225 SMB-4, M3AAL 250 SMA-4

(5) Solicitante — ABB AUTOMATION PRODUCTS, S.A.
DIVISION MOTORES

(6) Dirección — Pol. Industrial, S.O. s/n
08192 Sant Quirze del Vallés
Barcelona
ESPAÑA

(7) Este equipo o sistema de protección y sus variantes eventualmente aceptadas está descrito en el anexo del presente certificado y en los documentos descriptivos citados en dicho anexo

(8) El Laboratorio Oficial J.M. Madariaga (LOM), organismo notificado bajo la referencia nº 0163, conforme al artículo 9 de la Directiva 94/9/CE del Parlamento Europeo y del Consejo del 23 de Marzo de 1994, certifica que este equipo o sistema de protección es conforme a los Requisitos Esenciales de Seguridad y Salud relativos al diseño y construcción de equipos y sistemas destinados a ser utilizados en atmósferas potencialmente explosivas, indicados en el Anexo II de la Directiva.
La verificaciones y ensayos se recogen en el protocolo confidencial **LOM 02.194 KP**

(9) El cumplimiento con los Requisitos Esenciales de Seguridad y Salud está basado en la conformidad a los siguientes documentos:
– Normas **EN 50014:1997 + A1:1999 + A2:1999**
EN 50019:2000

(10) Si el signo X aparece después del número de certificado indica que este material o sistema de protección está sometido a las condiciones especiales de utilización que figuran en el anexo del presente certificado.

(11) Este Certificado de Examen CE de Tipo se refiere únicamente al diseño y construcción del equipo o sistema de protección especificado, conforme a la Directiva 94/9/CE. Podrán ser aplicables exigencias suplementarias de esta Directiva para la fabricación y suministro de este equipo o sistema de protección.

(12) El marcado del equipo o sistema de protección deberá incluir, entre otras indicaciones relevantes, lo siguiente:
Ex II 2 G EEx e II T2..T3

OFICIAL LABORATORIO LOM J.M. MADARIAGA

Madrid, 20 de diciembre de 2002

Carlos Fernández Ramón
DIRECTOR DEL LABORATORIO

Angel Vega Remesal
Responsable del área ATEX

(Este documento solo puede reproducirse íntegramente y sin cambio alguno)

Pág. 1/3

ENAC INSPECCIÓN Nº 23/IE/007

UNIVERSIDAD POLITÉCNICA DE MADRID
ENSAYOS E INVESTIGACIONES DE MATERIALES Y EQUIPOS PARA ATMÓSFERAS EXPLOSIVAS Y MINERÍA
(Real Decreto 334/1992 de 3 de Abril - BOE 1992-04-29 -)

Alenza, 2 - 28003-MADRID • ☎ (34) 91 4421366/ 91 3367009 • Fax.(34) 91 4419933 • ✉ lom@lom.upm.es

M000222

ABB

Declaration of Conformity

… Oy
…ors
… Box 633
…mbergin puistotie 5A
… - 65101 Vaasa, Finland

…ase induction motors, series M2BA, M2GP, M3JP, M3KP, M3GP, M3HP and …P; as listed on page 2 in this document, are in conformity with provisions of the …wing Council Directive:

…**f 23 March 1994**).

…he motors are in conformity with provisions of the following harmonized

… (2004), EN 60079-7 (2003), EN 60079-15 (2005), EN 61241-0 (2006), EN

…s of above standards do not effect the construction of the listed motors, which …ealth and Safety Requirements in Annex II of said directive.

… converter supply applications additional requirements must be respected …e installation, as described in the dedicated addendum joined hereafter.

Signed by ----------
Jouni Ikäheimo

Title Product Development Manager

Date February 16th, 2007

ABB Oy

Motors	Visiting Address	Telephone	Internet	Business Identity Code:
Postal address	Strömbergin Puistotie 5 A	+358 10 22 11	www.abb.fi	0763403-0
P.O. Box 633	FI-65320 Vaasa	Telefax	e-mail:	Domicile: Helsinki
FI-65101 Vaasa	FINLAND	+358 10 22 47372	first name.last name	
FINLAND			@fi.abb.com	

M000209

4

Increased safety motors with aluminum frame in brief, basic design

Motor size			90	100	112	132
Stator	Material		Die-cast aluminum alloy.			
	Paint color shade		Munsell blue 8B 4.5/3.25 / NCS 4822-B05G / RAL 5014.			
	Paint		Powder coating based on polyester resin, ≥ 30 µm		Two-component polyuretan paint, ≥ 40 µm	
Feet	Material		Aluminum alloy. Loose feet, bolted to the stator.		Aluminum alloy. Feet integrated with the stator.	
Bearing end shields	Material		Diecast aluminum alloy.			
	Paint color shade		Munsell blue 8B 4.5/3.25 / NCS 4822-B05G / RAL 5014.			
	Paint		One-component polyester resin powder. ≥ 30 µm		Two-component polyuretan paint, ≥ 40 µm	
Bearings	D-end	2-pole	6205-2Z/C3	6306-2Z/C3	6206-2Z/C3	6208-2Z/C3
		4-8 pole				
	N-end	2- pole	6204-2Z/C3	6205-2Z/C3	6205-2Z/C3	6206-2Z/C3
		4-8 pole				
Axially-locked bearings	Inner bearing cover		D-end			
Bearing seal	D-end		V-ring.			
	N-end		Labyrinth seal.			
Lubrication			Permanently lubricated bearings. Grease for bearing temperatures -40 to +160°C.			
Terminal box	Material		Die-cast aluminum alloy.			
	Surface treatment		Similar to stator.			
	Screws		Steel 5G. Galvanised and yellow chromated.			
Connections	Knock-out openings		4 x (M25+M20)		4 x (M25 + M20)	
	Terminal box		Screw terminal, 6 terminals.		Cable lugs, 6 terminals.	
	Screws		M4		M5	
	Max Cu-area, mm^2		6		10	
Fan	Material		Metal.			
Fan cover	Material		Steel sheet.			
Stator winding	Material		Copper			
	Impregnation		Polyester vanish. Tropicalised.			
	Insulation class		Insulation class F. Temperature rise class B, unless otherwise stated.			
	Winding protection		Optional.			
Rotor winding	Material		Die-cast aluminum.			
Balancing method			Half key balancing.			
Key ways			Closed key way			
Heating elements	On request		25 W			
Drain holes			Drain holes with closable plastic plugs. Closed on delivery.			
External earthing bolt			As standard.			
Enclosure			IP 55			
Cooling method			IC 411			

Increased safety motors with aluminum frame in brief, basic design

Motor size		160	180	200	225	250	280
Stator	Material	Die-cast aluminum alloy. Extruded aluminum alloy.					
	Paint color shade	Munsell blue 8B 4.5/3.25 / NCS 4822-B05G / RAL 5014.					
	Paint	Two component poliuretan paint, ≥ 40 µm					
Feet	Material	Aluminum alloy. Integrated with the stator.		Cast iron. Loose feet bolted to the stator.			
Bearing end shields	Material	Flanged bearing end shields of cast iron, other die-cast aluminum alloy.		Cast iron.			
	Paint color shade	Munsell blue 8B 4.5/3.25 / NCS 4822-B05G / RAL 5014.					
	Paint	Two-component poluretan paint, ≥ 40 µm					
Bearings	D-end 2-pole	6309-2Z/C3	6310-2Z/C3	6312-2Z/C3	6313-2Z/C3	6315-2Z/C3	6315-2Z/C3
	D-end 4-8 pole						6316-2Z/C3
	N-end 2-pole	6209-2Z/C3	6209-2Z/C3	6210-2Z/C3	6212-2Z/C3	6213-2Z/C3	6213-2Z/C3
	N-end 4-8 pole						6213-2Z/C3
Axially-locked bearings	Inner bearing cover	D-end					
Bearing seal	D-end	V-ring.		Outer and inner V-rings.			
	N-end	Labyrinth seal.		Outer and inner V-rings.			
Lubrication		Permanently lubricated bearings. Grease for bear. temp. -40 to +160°C.		Valve lubrication. Grease for bearing temperatures -40 to +150°C.			
Terminal box	Material	Die-cast aluminum alloy. Base integrated with stator.		Deep-drawn steel sheet, bolted to stator.			
	Surface treatment	Similar to stator.		Phospated. Polyester paint.			
	Screws	Steel 5 G. Galvanised and chromated.					
Connections	Knock-out openings	2 x (2 x M40 + M16)					
	Terminal box	Cable lugs, 6 terminals.					
	Screws	M6		M10			
	Max Cu-area, mm²	35		70			
	Flange-openings			2 x FL 13.2 x M40			2 x FL21.2 x M63
	Flange-openings for voltage code S			2 x FL 21.2 x M63			
Fan	Material	Metal.					
Fan cover	Material	Steel sheet. Phosphated. Polyester paint.					
Stator winding	Material	Copper					
	Impregnation	Polyester vanish. Tropicalised.					
	Insulation class	Insulation class F. Temperature rise class B, unless otherwise stated.					
	Winding protection	Optional.		PTC thermistors, 150°C			
Rotor winding	Material	Die-cast aluminum.					
Balancing method		Half key balancing.					
Key ways		Closed key way					
Heating elements	On request	25 W	50 W				
Drain holes		Drain holes with closable plastic plugs. Closed on delivery.					
External earthing bolt		As standard.					
Enclosure		IP55.					
Cooling method		IC 411.					

4

Increased safety motors with cast iron frame in brief, basic design

Motor size			80	90	100	112	132	160	180
Stator	Material		Cast iron EN-GJL-250						
	Paint color shade		Blue, Munsell 8B 4.5/3.25 / NCS 4822 B05G / RAL 5014						
	Paint		Two-pack epoxy paint, thickness ≥ 80 µm						
Bearing end shields	Material		Cast iron EN-GJL-250					Cast iron EN-GJL-200	
	Paint color shade		Blue, Munsell 8B 4.5/3.25 / NCS 4822 B05G / RAL 5014						
	Paint		Two-pack epoxy paint, thickness ≥ 80 µm						
Bearings	D-end	2-pole	6204-2Z/C3	6205-2Z/C3	6206-2Z/C3	6206-2Z/C3	6208-2Z/C3	6309/C3	6310/C3
		4-12 -pole						6309/C3	6310/C3
	N-end	2-pole	6204-2Z/C3	6205-2Z/C3	6206-2Z/C3	6206-2Z/C3	6208-2Z/C3	6309/C3	6309/C3
		4-12 -pole						6309/C3	6309/C3
Axially-locked bearings	Inner bearing cover		As standard, locked at D-end						
Bearing seal			Gamma ring as standard, radial seal optional						
Lubrication			Permanent grease lubrication.					Regreasable bearings as standard, lifetime lubrication as option	
SPM-nipples			–					As standard	
Rating plate	Material		Stainless steel						
Terminal box	Frame material		Cast iron EN-GJL-250					Cast iron EN-GJL-200	
	Cover material		Cast iron EN-GJL-250					Cast iron EN-GJL-200	
	Cover screws material		Acidproof steel (INOX)					Steel 5G, coated with zinc and yellow cromated	
Connections	Cable entries		1xM25x1.5		2xM32x1.5			2xM40x1.5	
	Terminals		6 terminals for connection with cable lugs (not included)						
Fan	Material		Reinforced glass fiber laminate					Zinc coated steel	
Fan cover	Material		Steel						
	Paint color shade		Blue, Munsell 8B 4.5/3.25 / NCS 4822 B05G						
	Paint		Polyester powder paint, thickness ≥ 80 µm						
Stator winding	Material		Copper						
	Insulation		Insulation class F						
	Winding protection		3 pcs thermistors						
Rotor winding	Material		Pressure die-cast aluminum						
Balancing method			Half key balancing						
Heating elements	On request		25 W						
Key ways			Closed key-way						
Drain holes			Not included				As standard open on delivery		
External earthing bolt			As standard						
Enclosure			IP 55, higher protection on request						
Cooling method			IC 411						

4

Increased safety motors with cast iron frame in brief, basic design

Motor size			200	225	250	280	315	355	400
Stator	Material		Cast iron EN-GJL-200			Cast iron EN-GJL-200			
	Paint color shade		Blue, Munsell 8B 4.5/3.25 / NCS 4822 B05G						
	Paint		Two-pack epoxy paint, thickness ≥ 80 µm						
Bearing end shields	Material		Cast iron EN-GJL-200			Cast iron EN-GJL-200, except flange-mounted sizes 355-400 Spheroidal graphit EN-GJS-400			
	Paint color shade		Blue, Munsell 8B 4.5/3.25 / NCS 4822 B05G						
	Paint		Two-pack epoxy paint, thickness ≥ 80 µm						
Bearings	D-end	2-pole	6312/C3	6313/C3	6315/C3	6316/C3	6316/C3	6316M/C3	6317M/C3
		4-12 -pole	6312/C3	6313/C3	6315/C3	6316/C3	6319/C3	6322/C3	6324/C3
	N-end	2-pole	6310/C3	6312/C3	6313/C3	6316/C3	6316/C3	6316M/C3	6317M/C3
		4-12 -pole	6310/C3	6312/C3	6313/C3	6316/C3	6316/C3	6316/C3	6319/C3
Axially-locked bearings	Inner bearing cover		As standard, locked at D-end						
Bearing seal			Gamma ring as standard, radial seal optional			V-ring as standard, radial seal optional			
Lubrication			Regreasable bearings as standard, lifetime lubrication as option			Regreasable bearings, regreasing nipples, M10x1			
SPM-nipples			As standard						
Rating plate	Material		Stainless steel						
Terminal box	Frame material		Cast iron EN-GJL-200						
	Cover material		Cast iron EN-GJL-200						
	Cover screws material		Steel 5G, coated with zinc and yellow chromated						
Connections	Cable entries		2xM50x1.5		2xM63x1.5		2xM63x1.5 2xØ60	2xØ60/80 2xØ60/80	2xØ80
	Terminals		6 terminals for connection with cable lugs (not included)						
Fan	Material		Reinforced glass fiber laminate or aluminum			Reinforced glass fiber, aluminum or polypropylene with metal hub			
Fan cover	Material		Zinc coated steel			Steel			
	Paint color shade		Blue, Munsell 8B 4.5/3.25 / NCS 4822 B05G						
	Paint		Two-pack epoxy polyester paint, thickness ≥ 80 µm						
Stator winding	Material		Copper						
	Insulation		Insulation class F						
	Winding protection		3 pcs thermistors						
Rotor winding	Material		Pressure die-cast aluminum			Pressure die-cast aluminum or copper			
Balancing method			Half key balancing						
Heating elements	On request		50 W				2 x 50 W	2 x 65 W	
Key ways			Closed key way			Open key way			
Drain holes			As standard, open on delivery						
External earthing bolt			As standard						
Enclosure			IP 55, higher protection on request						
Cooling method			IC 411						

4

4

Process performance
Non-sparking motors Ex nA

Totally enclosed squirrel cage three phase low voltage motors, Sizes 71 - 450, 0.25 to 1000 kW

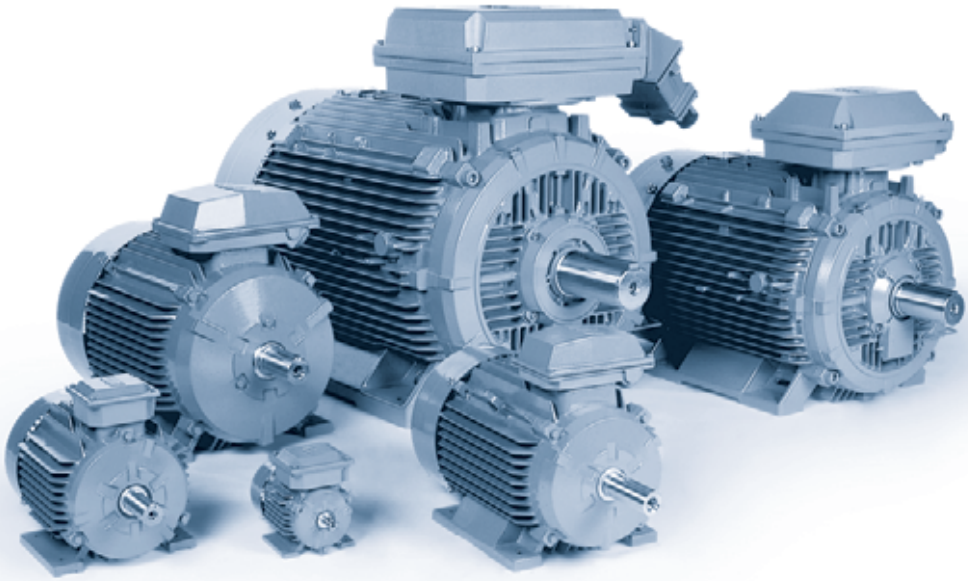

5

www.abb.com/motors&generators

> Motors
>> Motors and Generators for Hazardous Areas

Mechanical design.....98

Ordering information.....93

Technical data.....94

Rating plates.....98

Variant codes.....99

Dimension drawings.....104

Non-sparking motors in brief.....108

Mechanical design

Terminal boxes

Terminal boxes are mounted on the top of the basic motor versions. The terminal box can also be placed on either side of the motor besides on cast iron 160 to 250 motors. The terminal box is either rotatable or at least allows cable entry from either side which gives a choice of connection possibilities.

Protection class of the standard terminal box is IP 55.

Cast iron motors
The terminal boxes in motors 71-132 and 200-250 are 4x90° turnable as standard, in motor sizes 160 to 180 and 280-450 as standard 2x180° and as easy option 4x90°.

Motors are delivered with cable glands according to the tables.

Co-ordination of terminal boxes and cable entries

If no ordering information on the cable is given, it is assumed to be p.v.c. -insulated and termination parts are supplied according to the following tables.

Cast iron motors sizes 160-250 are as standard fitted with metric threads.

Motor sizes 80-250 with cast iron frame

Motor size	Main cable entries						Auxiliary cable entries		
	Thread	Cable gland	Metal plug	Single core cross-section[1] mm²	Terminal bolt size 6 x	Outer cable shealth mm	Thread	Cable gland	Outer cable shealth mm
80-90	1xM25	(1x)M25x1.5	-	10	M5	10-16	1xM20x1.5	1xM20x1.5	8-14
100-132	2xM32	(2x)M32x1.5	-	10	M5	16-21	1xM20x1.5	1xM20x1.5	8-14
160-180	2xM40	(2x)M40x1.5	-	35	M6	18-27	2xM20x1.5	2xM20x1.5	8-14
200-250	2xM50	(2x)M50x1.5	-	70	M10	26-35	2xM20x1.5	2xM20x1.5	8-14
280-400	See tables on next pages						2xM20x1.5	2xM20x1.5	8-14

[1] Max. size maybe bigger, but depends on the used cable lug. Clearances must be acc. to Ex-standards

Motor sizes 280 to 450 – Co-ordination of terminal boxes and cable entries

Motor size	Voltage/ freq. code	Ter-minal box	Top-mounted Flange or adapter	Side-mounted Flange or adapter	Cable box or cable gland	Gland thread	Cable diameter	Max. conn-ection cable area mm²
3000 r/min (2 poles)								
280		210	3GZF294730-749	3GZF294730-749	2x 3GZF294730-613	**2x M63x1.5**	2x Ø32-49	2x150
315SM, ML		370	3GZF294730-753	3GZF294730-753	2x 3GZF294730-613	**2x M63x1.5**	2x Ø32-49	2x240
315LKA, LKB		370	3GZF294730-753	3GZF294730-753	2x 3GZF294730-613	**2x M63x1.5**	2x Ø32-49	2x240
315LKC		750	3GZF294730-944	3GZF294730-759	3GZF294730-301		2x Ø48-60	4x240
355 SMA	D	750	3GZF294730-944	3GZF294730-759	3GZF294730-301		2x Ø48-60	4x240
355 SMA	E	370	3GZF294730-753	3GZF294730-753	2x 3GZF294730-613	**2x M63x1.5**	2x Ø32-49	2x240
355 SMB, SMC		750	3GZF294730-944	3GZF294730-759	3GZF294730-301		2x Ø48-60	4x240
355 ML, LK		750	3GZF294730-944	3GZF294730-759	3GZF294730-501		2x Ø60-80	4x240
400 L, LK		750	3GZF294730-944	3GZF294730-759	3GZF294730-501		2x Ø60-80	4x240
450 LA	D	1200	see option [1]	-	see option [1]		see option [1]	6x240
	E	750	3GZF294730-944	-	3GZF294730-501		2x Ø60-80	4x240
450 LB	D, E	1200	see option [1]	-	see option [1]		see option [1]	6x240
450 LC	E, U	1200	see option [1]	-	see option [1]		see option [1]	6x240
1500 r/min (4 poles)								
280		210	3GZF294730-749	3GZF294730-749	2x 3GZF294730-613	**2x M63x1.5**	2x Ø32-49	2x150
315SM, ML		370	3GZF294730-753	3GZF294730-753	2x 3GZF294730-613	**2x M63x1.5**	2x Ø32-49	2x240
315LKA, LKB		370	3GZF294730-753	3GZF294730-753	2x 3GZF294730-613	**2x M63x1.5**	2x Ø32-49	2x240
315LKC		750	3GZF294730-944	3GZF294730-759	3GZF294730-301		2x Ø48-60	4x240
355 SMA	D	750	3GZF294730-944	3GZF294730-759	3GZF294730-301		2x Ø48-60	4x240
355 SMA	E	370	3GZF294730-753	3GZF294730-753	2x 3GZF294730-613	**2x M63x1.5**	2x Ø32-49	2x240
355 SMB, SMC		750	3GZF294730-944	3GZF294730-759	3GZF294730-301		2x Ø48-60	4x240
355 ML, LK		750	3GZF294730-944	3GZF294730-759	3GZF294730-501		2x Ø60-80	4x240
400 L, LK		750	3GZF294730-944	3GZF294730-759	3GZF294730-501		2x Ø60-80	4x240
450 LA	D	1200	see option [1]	-	see option [1]		see option [1]	6x240
	E	750	3GZF294730-944	-	3GZF294730-501		2x Ø60-80	4x240
450 LB	D, E	1200	see option [1]	-	see option [1]		see option [1]	6x240
450 LC	D, E	1200	see option [1]	-	see option [1]		see option [1]	6x240
1000 r/min (6 poles)								
280		210	3GZF294730-749	3GZF294730-749	2x 3GZF294730-613	**2x M63x1.5**	2x Ø32-49	2x150
315		370	3GZF294730-753	3GZF294730-753	2x 3GZF294730-613	**2x M63x1.5**	2x Ø32-49	2x240
355 SMA, SMB		370	3GZF294730-753	3GZF294730-753	2x 3GZF294730-613	**2x M63x1.5**	2x Ø32-49	2x240
355 SMC	D	750	3GZF294730-944	3GZF294730-759	3GZF294730-301		2x Ø48-60	4x240
355 SMC	E	370	3GZF294730-753	3GZF294730-753	2x 3GZF294730-613	**2x M63x1.5**	2x Ø32-49	2x240
355 ML		750	3GZF294730-944	3GZF294730-759	3GZF294730-301		2x Ø48-60	4x240
355 LKA		750	3GZF294730-944	3GZF294730-759	3GZF294730-301		2x Ø48-60	4x240
355 LKB		750	3GZF294730-944	3GZF294730-759	3GZF294730-501		2x Ø60-80	4x240
400 L, LK		750	3GZF294730-944	3GZF294730-759	3GZF294730-501		2x Ø60-80	4x240
450 LA	D, E	750	3GZF294730-944	-	3GZF294730-501		2x Ø60-80	4x240
450 LB	D	1200	see option [1]	-	see option [1]		see option [1]	6x240
	E	750	3GZF294730-944	-	3GZF294730-501		2x Ø60-80	4x240
450 LC	D	1200	see option [1]	-	see option [1]		see option [1]	6x240
	E	750	3GZF294730-944	-	3GZF294730-501		2x Ø60-80	4x240
750 r/min (8 poles)								
280		210	3GZF294730-749	3GZF294730-749	2x 3GZF294730-613	**2x M63x1.5**	2x Ø32-49	2x150
315		370	3GZF294730-753	3GZF294730-753	2x 3GZF294730-613	**2x M63x1.5**	2x Ø32-49	2x240
355 SM		370	3GZF294730-753	3GZF294730-753	2x 3GZF294730-613	**2x M63x1.5**	2x Ø32-49	2x240
355 ML	D	750	3GZF294730-944	3GZF294730-759	3GZF294730-301		2x Ø48-60	4x240
355 ML	E	370	3GZF294730-753	3GZF294730-753	2x 3GZF294730-613	**2x M63x1.5**	2x Ø32-49	2x240
355 LK		750	3GZF294730-944	3GZF294730-759	3GZF294730-301		2x Ø48-60	4x240
400 LA, LB, LKA, LKB		750	3GZF294730-944	3GZF294730-759	3GZF294730-301		2x Ø48-60	4x240
400 LC, LKC		750	3GZF294730-944	3GZF294730-759	3GZF294730-501		2x Ø60-80	4x240
450 L_	D, E	750	3GZF294730-944	-	3GZF294730-501		2x Ø60-80	4x240

Voltage/frequency codes:
D = 380-420 VD 50 Hz, 660/690 VY 50 Hz, 440-480 VD 60 Hz
E = 500 VD 50 Hz, 575 VD 60 Hz

Terminal bolt sizes M12.
Earthing bolt size on stator frame M10.

[1] Options - Variant code 444:

Terminal box	Adapter	Cable box or flange	Max. connection cable area mm²
1200	3GZF294730-944	3GZF294730-301	2x Ø48-60
	3GZF294730-944	3GZF294730-501	2x Ø60-80
	3GZF294730-945	2x 3GZF294730-301	4x Ø48-60
	3GZF294730-945	2x 3GZF294730-501	4x Ø60-80
	3GZF293745-1	3x 3GZF294730-301	6x Ø48-60
	3GZF293745-1	3x 3GZF294730-501	6x Ø60-80
	3GZF293745-2	Flange for gable glands	

Adapter and cable box for terminal box size 1200.
To be defined when ordering

Terminal box	Cable cross-section	Max. rated current D-connection	Y-connection	Earthing
210	25 mm²	260	150	2xM10
210	35 mm²	363	210	2xM10
370	50 mm²	470	270	2xM10
370	70 mm²	640	370	2xM10
750	2 x 70 mm²	950	550	2xM10
750	2 x 95 mm²	1300	750	2xM10
1200	2 x 120 mm²	1650	950	4xM12
1200	2 x 150 mm²	2100	1200	4xM12

Cable cross-section area between the winding and the terminal board.

M3GP 280 - 315

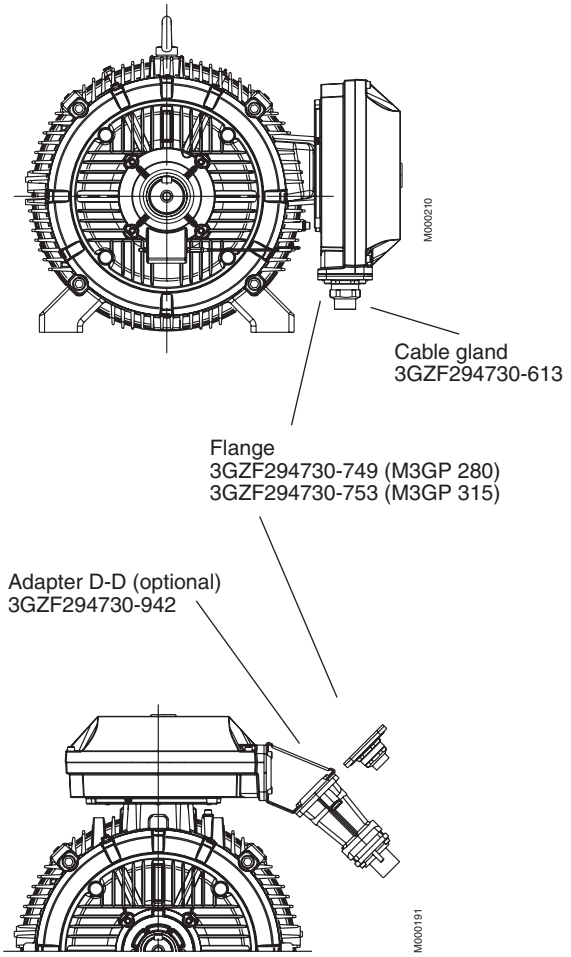

M3GP 355 - 400

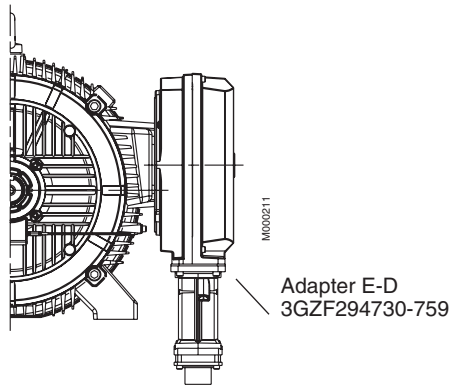

M3GP 355 - 450

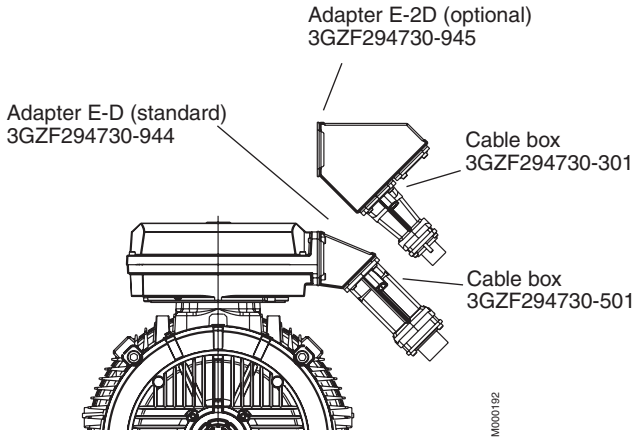

5

Auxiliary devices (view from N-end)

Cable glands for auxiliary devices
as standard 2 x M20 x 1.5.

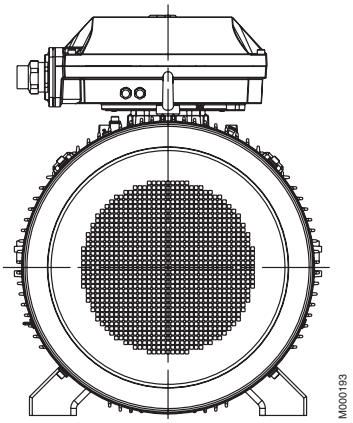

M3GP 450 with terminal box 1200

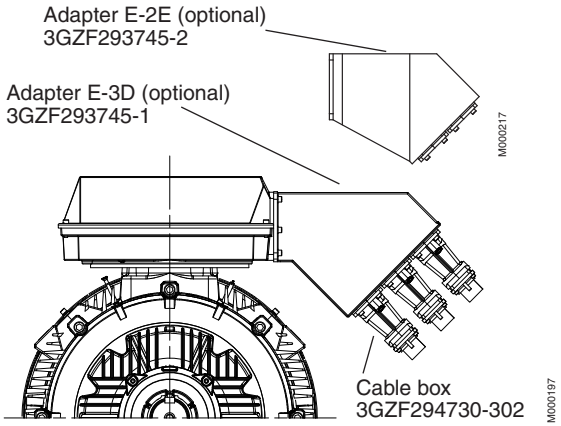

Dimensions for terminal box inlets

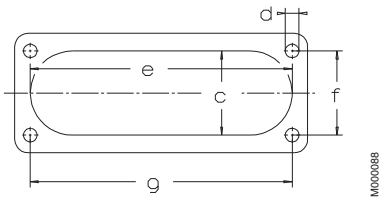

Inlet	c	e	f	g	d
C	62	193	62	193	M8
D	100	300	80	292	M10
E	115	370	100	360	M12

Ordering information

Sample order

When placing an order, please state the following minimum data in the order, as in example.

The product code of the motor is composed in accordance with the following example.

Motor type	M3GP 160 MLA
Pole number	2
Mounting arrangement (IM code)	IM B3 (IM 1001)
Rated output	11 kW
Product code	3GBP161410-ADG
Variant codes if needed	

Motor size

A	B	C	D, E, F, G
M3GP	**160 MLA**	**3GGP 161 410-**	**A D G 003 etc.**

1 2 3 4 5 6 7 8 9 10 11 12 13 14

A Motor type
B Motor size
C Product code
- **D** Mounting arrangement code
- **E** Voltage and frequency code
- **F** Generation code

G Variant codes

Explanation of the product code:

Positions 1 to 4
3GBA/3GGP = Totally enclosed fan cooled squirrel cage motor with cast iron frame, non-sparking

Positions 5 and 6
IEC-frame

07 = 71	**13** = 132	**25** = 250
08 = 80	**16** = 160	**28** = 280
09 = 90	**18** = 180	**31** = 315
10 = 100	**20** = 200	**35** = 355
11 = 112	**22** = 225	**40** = 400
		45 = 450

Position 7
Speed (Pole pairs)
1 = 2 poles
2 = 4 poles
3 = 6 poles
4 = 8 poles
5 = 10 poles

Position 8 to 10
Serial number

Position 11
- (dash)

Position 12
Mounting arrangement
A = Foot-mounted, top-mounted terminal box
R = Foot-mounted, terminal box RHS seen from D-end
L = Foot-mounted, terminal box LHS seen from D-end
B = Flange-mounted, large flange
C = Flange-mounted, small flange (sizes 71 to 112)
H = Foot- and flange-mounted, terminal box top-mounted
J = Foot- and flange-mounted, small flange with tapped holes
S = Foot- and flange-mounted, terminal box RHS seen from D-end
T = Foot- and flange-mounted, terminal box LHS seen from D-end
V = Flange-mounted, special flange
F = Foot- and flange-mounted. Special flange

Position 13
Voltage and frequency code
See table below

Position 14
Generation code
A, B, C...

The product code must be, if needed, followed by variant codes.

5

Code letters for supplementing the product code

Code letter for voltage and frequency

Direct start or, with Δ-connection, also Y/Δ-start

Motor	S		D		H	E		F	T	U	X
size	50Hz	60 Hz	50 Hz	60 Hz	50 Hz	50 Hz	60 Hz	50 Hz	50 Hz	50 Hz	
71-132	220-240 VΔ 380-420 VY	440-480 VY -	380-420 VΔ 660-690 VY	440-480VΔ -	415 VΔ -	500 VΔ -	575 VΔ -	500 VY -	660 VΔ -	690 VΔ -	Other rated voltage, connection or frequency 690 V maximum
160-450	220, 230 VΔ 380,400,415VY	- 440VY	380, 400, 415 VΔ 660, 690 VY	440VΔ -	415 VΔ -	500 VΔ -	- -	500 VY -	660 VΔ -	690 VΔ -	

Process performance Non-sparking motors Ex nA

Technical data for totally enclosed squirrel cage three phase cast iron motors

ATEX Certified

IP 55. IC 411; Insulation class F. temperature rise class B

Output kW 50Hz	Output kW 60 Hz		Motor type	Product code	Speed r/min	Efficiency at FL 100%	Efficiency at FL 75%	Power factor cos φ	Current I_N A	Current I_s/I_N	Torque T_N Nm	Torque T_s/T_N	Torque T_{max}/T_N	Moment of inertia J = 1/4 GD²	Weight kg	Sound pressure level L_P dB(A)
3000 r/min = 2-poles					**400 V 50 Hz**						**Basic design**					
0.75	0.9		M3GP 80 MA	3GGP 081 310-••G	2861	78.2	76.7	0.86	1.62	7.3	2.5	3.7	3.8	0.0006	28	59
1.1	1.3		M3GP 80 MB	3GGP 081 320-••G	2831	82.0	82.0	0.89	2.21	5.7	3.7	3.0	3.2	0.0007	30	59
1.5	1.7		M3GP 90 SLA	3GGP 091 010-••G	2881	82.7	82.6	0.88	3	6.7	5	3.0	3.5	0.001	41	61
2.2	2.5		M3GP 90 SLC	3GGP 091 030-••G	2871	85.3	85.8	0.90	4.19	7.5	7.3	2.7	3.5	0.0014	44	61
3	3.5		M3GP 100 LA	3GGP 101 510-••G	2896	87.4	87.7	0.90	5.6	7.2	10	2.2	3.0	0.0036	58	65
4	4.6		M3GP 112 MB	3GGP 111 320-••G	2901	87.7	87.8	0.90	7.5	7.2	13	3.6	3.7	0.0043	61	65
5.5	6.3		M3GP 132 SMB	3GGP 131 220-••G	2905	87.6	87.5	0.90	10.4	7.0	18	2.4	3.3	0.009	89	71
7.5	8.6		M3GP 132 SMD	3GGP 131 240-••G	2914	89.0	89.2	0.90	13.8	7.6	25	2.8	3.6	0.012	97	71
11	12.7		M3GP 160 MLA	3GGP 161 410-••G	2936	91.5	91.4	0.87	20	7.2	36	2.9	3.3	0.039	147	71
15	17		M3GP 160 MLB	3GGP 161 420-••G	2934	91.9	91.8	0.88	28	7.5	49	3.1	3.5	0.047	156	71
18.5	21		M3GP 160 MLC	3GGP 161 430-••G	2934	92.6	92.7	0.90	33	7.5	60	2.8	3.4	0.054	167	71
22	25		M3GP 180 MLA	3GGP 181 410-••G	2938	92.8	92.9	0.90	39	6.9	72	2.5	3.1	0.077	194	71
30	35		M3GP 200 MLA	3GGP 201 410-••G	2946	94.2	94.3	0.88	54	7.4	97	3.0	3.2	0.15	275	74
37	43		M3GP 200 MLC	3GGP 201 430-••G	2948	94.3	94.2	0.89	65	7.5	120	2.8	3.2	0.19	305	75
45	52		M3GP 225 SMB	3GGP 221 220-••G	2968	94.8	94.7	0.87	79	7.2	145	2.7	3.0	0.26	365	76
55	63		M3GP 250 SMA	3GGP 251 210-••G	2970	94.7	94.5	0.88	96	7.7	177	2.4	3.1	0.49	425	75
75	90		M3GP 280 SMA	3GGP 281 210-••G	2978	94.8	94.3	0.88	131	7.6	240	2.1	3.0	0.8	625	77
90	105		M3GP 280 SMB	3GGP 281 220-••G	2976	95.1	94.8	0.90	152	7.4	289	2.1	2.9	0.9	665	77
110	125		M3GP 315 SMA	3GGP 311 210-••G	2982	95.1	94.4	0.86	194	7.6	352	2.0	3.0	1.2	880	78
132	155		M3GP 315 SMB	3GGP 311 220-••G	2982	95.5	95.0	0.88	228	7.4	423	2.2	3.0	1.4	940	78
160	185		M3GP 315 SMC	3GGP 311 230-••G	2981	96.1	95.6	0.89	269	7.5	513	2.3	3.0	1.7	1025	78
200	230		M3GP 315 MLA	3GGP 311 410-••G	2980	96.3	95.9	0.90	336	7.7	641	2.6	3.0	2.1	1190	78
250	290	2)	M3GP 355 SMA	3GGP 351 210-••G	2984	96.4	95.9	0.89	425	7.7	800	2.1	3.3	3	1600	83
315	362	2)	M3GP 355 SMB	3GGP 351 220-••G	2980	96.6	96.3	0.89	535	7.0	1009	2.1	3.0	3.4	1680	83
355	410	2)	M3GP 355 SMC	3GGP 351 230-••G	2984	96.8	96.5	0.88	604	7.2	1136	2.2	3.0	3.6	1750	83
400	450	2)	M3GP 355 MLA	3GGP 351 410-••G	2982	96.9	96.7	0.88	680	7.1	1281	2.3	2.9	4.1	2000	83
450	510	2)	M3GP 355 MLB	3GGP 351 420-••G	2983	97.1	97.0	0.90	750	7.9	1441	2.2	2.9	4.3	2080	83
500		2)	M3GP 355 LKA	3GGP 351 810-••G	2982	97.1	97.0	0.90	830	7.5	1601	2.1	3.5	4.8	2320	83
560	630	3)	M3GP 400 LA	3GGP 401 510-••G	2988	97.2	97.0	0.89	940	7.8	1790	2.1	3.4	7.9	2950	82
560	630	3)	M3GP 400 LKA	3GGP 401 810-••G	2988	97.2	97.0	0.89	940	7.8	1790	2.1	3.4	7.9	2950	82
560		2)	M3GP 355 LKB	3GGP 351 820-••G	2982	97.2	97.1	0.90	930	8.0	1793	2.3	3.6	5.2	2460	83
630	710	3)	M3GP 400 LKB	3GGP 401 820-••G	2987	97.4	97.3	0.89	1055	7.8	2014	2.2	3.4	8.2	3050	82
630	710	3)	M3GP 400 LB	3GGP 401 520-••G	2987	97.4	97.3	0.89	1055	7.8	2014	2.2	3.4	8.2	3050	82
710	780	3)	M3GP 400 LKC	3GGP 401 830-••G	2987	97.5	97.4	0.89	1185	7.8	2270	2.6	3.4	9.3	3300	82
710	780	3)	M3GP 400 LC	3GGP 401 530-••G	2987	97.5	97.4	0.89	1185	7.8	2270	2.6	3.4	9.3	3300	82
800	900	3)	M3GP 450 LA	3GGP 451 510-••G	2990	97.3	97.2	0.88	1345	7.8	2555	1.3	3.2	12.5	4000	85
900	1000	3)	M3GP 450 LB	3GGP 451 520-••G	2990	97.4	97.3	0.88	1515	7.8	2874	1.5	3.1	14	4200	85
1000		1)3)6)	M3GP 450 LC	3GGP 451 530-••G	2990	97.6	97.5	0.89	965	7.8	3194	1.6	3.2	15.5	4400	85
3000 r/min = 2-poles					**400 V 50 Hz**						**High-output design**					
9.2	10.6		M3GP 132 SME	3GGP 131 250-••G	2875	86.2	86.6	0.91	17.1	6.1	30.6	2.2	2.9	0.012	97	77
22	25		M3GP 160 MLD	3GGP 161 440-••G	2929	91.7	91.6	0.90	39	7.4	72	2.8	3.4	0.059	173	77
30	34		M3GP 180 MLB	3GGP 181 420-••G	2944	93.0	92.9	0.88	54	7.5	97	2.8	3.5	0.092	210	78
37	43	4)	M3GP 180 MLC	3GGP 181 430-••G	2947	93.9	93.9	0.89	65	7.9	120	2.9	3.6	0.114	229	78
45	50	5)	M3GP 200 MLE	3GGP 201 450-••G	2944	93.9	94.0	0.88	79	7.3	146	2.9	3.1	0.22	310	79
55	63		M3GP 225 SMC	3GGP 221 230-••G	2965	94.5	94.2	0.88	96	7.1	177	2.6	3.0	0.29	385	80
67	73	4)5)	M3GP 225 SMD	3GGP 221 240-••G	2966	94.6	94.1	0.86	120	7.4	216	2.8	3.2	0.31	395	78
75	84		M3GP 250 SMB	3GGP 251 220-••G	2969	95.2	95.1	0.89	129	7.9	241	2.6	3.2	0.57	465	80
90	96	1)4)5)	M3GP 250 SMC	3GGP 251 230-••G	2965	95.0	94.9	0.90	153	7.7	290	2.6	3.1	0.59	475	80
110	125		M3GP 280 SMC	3GGP 281 230-••G	2978	95.7	95.3	0.90	185	7.9	353	2.4	3.0	1.15	725	77

The two bullets in the product code indicate choice of mounting arrangement, voltage and frequency (see ordering information).

Values above are given for 400 V 50 Hz; data for other voltages, frequencies and temperatures on request.

Process performance Non-sparking motors Ex nA

Technical data for totally enclosed squirrel cage three phase cast iron motors

ATEX Certified

IP 55. IC 411; Insulation class F. temperature rise class B

Output kW 50Hz	Output kW 60 Hz	Motor type	Product code	Speed r/min	Efficiency at FL 100%	Efficiency at FL 75%	Power factor cos φ	Current I_N A	Current I_s/I_N	Torque T_N Nm	Torque T_s/T_N	Torque T_{max}/T_N	Moment of inertia J = 1/4 GD²	Weight kg	Sound pressure level L_P dB(A)
1500 r/min = 4-poles				**400 V 50 Hz**						**Basic design**					
0.55	**0.66**	**M3GP 80 MA**	3GGP 082 310-••G	1421	77.2	76.4	0.76	1.4	4.9	3.7	2.3	2.7	0.001	29	59
0.75	**0.9**	**M3GP 80 MB**	3GGP 082 320-••G	1413	78.3	78.4	0.79	1.8	5.1	5.1	2.4	2.7	0.0012	29	59
1.1	**1.3**	**M3GP 90 SLA**	3GGP 092 010-••G	1435	80.8	80.3	0.81	2.48	5.9	7.3	2.8	3.5	0.002	42	54
1.5	**1.7**	**M3GP 90 SLC**	3GGP 092 030-••G	1431	81.8	81.8	0.81	3.31	6.4	10	2.9	3.4	0.003	44	54
2.2	**2.5**	**M3GP 100 LA**	3GGP 102 510-••G	1441	86.4	87.0	0.86	4.4	7.0	14.5	2.7	3.3	0.0075	58	52
3	**3.5**	**M3GP 100 LB**	3GGP 102 520-••G	1442	86.2	86.7	0.83	6.1	7.0	20	2.7	3.4	0.0081	60	52
4	**4.6**	**M3GP 112 MC**	3GGP 112 330-••G	1436	85.7	86.0	0.81	8.4	6.9	27	2.9	3.7	0.0093	63	52
5.5	**6.3**	**M3GP 132 SMB**	3GGP 132 220-••G	1448	87.6	87.9	0.81	11.4	6.7	36	3.1	3.3	0.02	93	60
7.5	**8.6**	**M3GP 132 SMD**	3GGP 132 240-••G	1447	88.4	88.7	0.81	15.4	6.6	50	3.1	3.4	0.023	99	60
11	**12.7**	**M3GP 160 MLC**	3GGP 162 430-••G	1470	91.6	91.6	0.82	22.5	7.7	71	3.1	3.6	0.09	166	62
15	**17**	**M3GP 160 MLE**	3GGP 162 450-••G	1467	92.3	92.3	0.83	30	7.6	98	3.1	3.6	0.121	189	62
18.5	**21**	**M3GP 180 MLA**	3GGP 182 410-••G	1474	92.7	92.8	0.82	36	7.3	120	2.7	3.2	0.176	206	62
22	**25**	**M3GP 180 MLB**	3GGP 182 420-••G	1471	92.8	92.9	0.82	42	7.1	143	2.6	3.0	0.191	214	62
30	**35**	**M3GP 200 MLB**	3GGP 202 420-••G	1475	93.7	93.8	0.84	56	7.4	194	3.3	3.0	0.34	305	61
37	**43**	**M3GP 225 SMB**	3GGP 222 220-••G	1480	93.8	93.6	0.84	69	7.7	239	3.2	2.9	0.42	355	67
45	**52**	**M3GP 225 SMC**	3GGP 222 230-••G	1477	94.6	94.6	0.86	81	7.4	291	3.2	2.7	0.49	390	67
55	**63**	**M3GP 250 SMA**	3GGP 252 210-••G	1479	94.7	94.8	0.83	101	7.2	355	2.5	3.1	0.72	415	66
75	**88**	**M3GP 280 SMA**	3GGP 282 210-••G	1484	94.9	94.8	0.85	135	6.9	483	2.5	2.8	1.25	625	68
90	**105**	**M3GP 280 SMB**	3GGP 282 220-••G	1483	95.3	95.3	0.86	159	7.2	580	2.5	2.7	1.5	665	68
110	**125**	**M3GP 315 SMA**	3GGP 312 210-••G	1487	95.6	95.4	0.86	193	7.2	706	2.0	2.5	2.3	900	70
132	**150**	**M3GP 315 SMB**	3GGP 312 220-••G	1487	95.8	95.7	0.86	232	7.1	848	2.3	2.7	2.6	960	70
160	**185**	**M3GP 315 SMC**	3GGP 312 230-••G	1487	96.0	95.9	0.85	287	7.2	1028	2.4	2.9	2.9	1000	70
200	**230**	**M3GP 315 MLA**	3GGP 312 410-••G	1486	96.2	96.2	0.86	351	7.2	1285	2.5	2.9	3.5	1160	74
250	**288**	**M3GP 355 SMA**	3GGP 352 210-••G	1488	96.5	96.4	0.86	438	7.1	1604	2.3	2.7	5.9	1610	74
315	**362**	**M3GP 355 SMB**	3GGP 352 220-••G	1488	96.7	96.6	0.86	550	7.3	2022	2.3	2.8	6.9	1780	74
350	**385** [5]	**M3GP 355 SMC**	3GGP 352 230-••G	1487	96.7	96.5	0.86	610	6.9	2248	2.4	2.7	7.2	1820	78
400	**450** [5]	**M3GP 355 MLA**	3GGP 352 410-••G	1489	96.9	96.7	0.85	700	6.8	2565	2.3	2.6	8.4	2140	78
450	**490** [5]	**M3GP 355 MLB**	3GGP 352 420-••G	1490	96.9	96.7	0.86	784	6.9	2884	2.3	2.9	8.4	2140	78
500	**575**	**M3GP 355 LKA**	3GGP 352 810-••G	1490	97.0	96.9	0.86	875	6.8	3204	2.0	3.0	10	2500	78
560	**630** [5]	**M3GP 400 LA**	3GGP 402 510-••G	1491	97.1	97.0	0.85	980	7.4	3587	2.4	3.0	15	3200	78
560	**630** [5]	**M3GP 400 LKA**	3GGP 402 810-••G	1491	97.1	97.0	0.85	980	7.4	3587	2.4	3.0	15	3200	78
630	**710** [5]	**M3GP 400 LKB**	3GGP 402 820-••G	1491	97.1	97.0	0.87	1085	7.6	4035	2.2	3.1	16	3300	78
630	**710** [5]	**M3GP 400 LB**	3GGP 402 520-••G	1491	97.1	97.0	0.87	1085	7.6	4035	2.2	3.1	16	3300	78
680	**740** [5]	**M3GP 400 LKC**	3GGP 402 830-••G	1492	97.2	97.1	0.85	1190	7.9	4352	2.5	3.3	17	3400	78
680	**740** [5]	**M3GP 400 LC**	3GGP 402 530-••G	1492	97.2	97.1	0.85	1190	7.9	4352	2.5	3.3	17	3400	78
800	**900**	**M3GP 450 LA**	3GGP 452 510-••G	1492	97.0	96.9	0.86	1385	7.0	5120	1.3	2.8	23	4050	85
900	**1000**	**M3GP 450 LB**	3GGP 452 520-••G	1492	97.1	97.0	0.86	1555	7.0	5760	1.3	2.8	25	4350	85
1000	**1100** [1]	**M3GP 450 LC**	3GGP 452 530-••G	1491	97.2	97.1	0.86	1725	6.8	6405	1.3	2.7	30	4700	85
1500 r/min = 4-poles				**400 V 50 Hz**						**High-output design**					
9.2	**10.6** [1]	**M3GP 132 SME**	3GGP 132 250-••G	1422	86.4	87.8	0.84	18.5	5.5	62	2.5	2.7	0.023	99	60
18.5	**21**	**M3GP 160 MLF**	3GGP 162 460-••G	1469	92.5	92.8	0.83	36.5	8.0	120	3.2	3.6	0.121	189	68
22	**25** [4]	**M3GP 160 MLG**	3GGP 162 470-••G	1466	92.1	92.2	0.81	44.5	8.2	143	3.3	3.6	0.121	189	68
30	**34** [1]	**M3GP 180 MLC**	3GGP 182 430-••G	1473	92.5	92.5	0.81	59	7.8	194	3.1	3.4	0.239	233	66
37	**43**	**M3GP 200 MLC**	3GGP 202 430-••G	1475	93.5	93.5	0.82	70	7.5	239	3.5	3.2	0.34	305	73
55	**61** [5]	**M3GP 225 SMD**	3GGP 222 240-••G	1476	94.2	94.1	0.85	100	7.6	356	3.4	2.8	0.49	390	74
60	**67** [4][5]	**M3GP 225 SME**	3GGP 222 250-••G	1479	94.2	94.0	0.84	110	8.0	387	3.6	3.0	0.55	410	74
75	**82** [5]	**M3GP 250 SMB**	3GGP 252 220-••G	1476	94.8	95.0	0.86	133	7.6	485	2.8	3.2	0.88	470	73
86	**98** [4][5]	**M3GP 250 SMC**	3GGP 252 230-••G	1477	95.0	95.1	0.85	155	7.8	556	2.9	3.5	0.98	495	74
110	**125**	**M3GP 280 SMC**	3GGP 282 230-••G	1485	95.7	95.7	0.86	195	7.6	707	3.0	3.0	1.85	725	68

[1] Temperature rise class F.
[2] -3dB(A) sound pressure level reduction with unidirectional fan construction. Direction of rotation must be stated when ordering. see variant codes 044 and 045.
[3] Unidirectional fan construction as standard. Direction of rotation must be stated when ordering. see variant codes 044 and 045
[4] The output exceeds one step higher output than the basic with rated output acc. to CENELEC
[5] For 400-415 V 50 Hz (380 V 50 Hz voltage code B)
[6] Current at 690 VD 50 Hz (voltage code U), lowest possible voltage 500 VD 50 Hz (voltage code E)

5

Process performance Non-sparking motors Ex nA

Technical data for totally enclosed squirrel cage three phase cast iron motors

ATEX Certified

IP 55. IC 411; Insulation class F. temperature rise class B

Output kW 50Hz	Output kW 60 Hz		Motor type	Product code	Speed r/min	Efficiency at FL 100%	Efficiency at FL 75%	Power factor cos φ	Current I_N A	Current I_s/I_N	Torque T_N Nm	Torque T_s/T_N	Torque T_{max}/T_N	Moment of inertia J = 1/4 GD²	Weight kg	Sound pressure level L_P dB(A)
1000 r/min = 6-poles					**400 V 50 Hz**						**Basic design**					
0.37	0.44		M3GP 80 MA	3GGP 083 310-••G	953	67.2	66.3	0.62	1.32	4.8	3.7	3.4	3.6	0.0022	29	50
0.55	0.66		M3GP 80 MB	3GGP 083 320-••G	938	67.9	66.4	0.68	1.79	4.3	5.6	2.8	2.9	0.0022	29	50
0.75	0.9		M3GP 90 SLA	3GGP 093 010-••G	942	74.0	73.1	0.69	2.17	4.5	7.6	2.8	3.2	0.0036	41	44
1.1	1.3		M3GP 90 SLC	3GGP 093 030-••G	940	75.6	74.5	0.67	3.25	4.6	11	3.1	3.4	0.0037	43	44
1.5	1.7		M3GP 100 LA	3GGP 103 510-••G	951	81.2	80.9	0.74	3.7	4.2	15	2.3	2.9	0.012	57	54
2.2	2.5		M3GP 112 MB	3GGP 113 320-••G	950	81.8	82.0	0.76	5.2	5.9	22	2.2	2.8	0.014	60	54
3	3.5		M3GP 132 SMB	3GGP 133 220-••G	961	83.2	82.2	0.77	6.9	6.1	30	2.1	3.0	0.032	93	57
4	4.6		M3GP 132 SMC	3GGP 133 230-••G	967	85.6	85.3	0.74	9.3	6.6	39.5	2.3	3.4	0.034	95	57
5.5	6.3		M3GP 132 SMD	3GGP 133 240-••G	958	85.5	85.6	0.76	12.5	6.7	55	2.2	3.0	0.036	97	57
7.5	8.6		M3GP 160 MLA	3GGP 163 410-••G	965	89.0	89.7	0.81	15.5	6.5	74	1.9	3.0	0.088	160	57
11	12.5		M3GP 160 MLB	3GGP 163 420-••G	965	89.6	90.3	0.80	23	7.1	109	2.1	3.3	0.106	173	65
15	17		M3GP 180 MLB	3GGP 183 420-••G	972	91.4	91.6	0.81	31	7.0	147	1.9	3.3	0.221	233	58
18.5	21		M3GP 200 MLA	3GGP 203 410-••G	983	91.6	91.7	0.81	37	7.1	180	3.2	3.1	0.37	265	66
22	25		M3GP 200 MLB	3GGP 203 420-••G	983	91.9	91.9	0.81	43	7.5	214	3.2	3.2	0.43	285	61
30	35		M3GP 225 SMB	3GGP 223 220-••G	985	93.0	93.0	0.81	58	7.4	291	3.4	3.0	0.64	350	61
37	43		M3GP 250 SMA	3GGP 253 210-••G	987	93.6	93.6	0.81	71	7.2	358	3.2	2.9	1.16	420	66
45	55		M3GP 280 SMA	3GGP 283 210-••G	990	94.4	94.3	0.84	82	7.0	434	2.5	2.5	1.85	605	66
55	63		M3GP 280 SMB	3GGP 283 220-••G	990	94.6	94.6	0.84	101	7.0	531	2.7	2.6	2.2	645	66
75	86		M3GP 315 SMA	3GGP 313 210-••G	992	95.0	94.7	0.82	141	7.4	722	2.4	2.8	3.2	830	70
90	105		M3GP 315 SMB	3GGP 313 220-••G	992	95.5	95.3	0.84	163	7.5	866	2.4	2.8	4.1	930	70
110	125		M3GP 315 SMC	3GGP 313 230-••G	991	95.6	95.5	0.83	202	7.4	1060	2.5	2.9	4.9	1000	70
132	150		M3GP 315 MLA	3GGP 313 410-••G	991	95.8	95.7	0.83	240	7.5	1272	2.7	3.0	5.8	1150	68
160	195		M3GP 355 SMA	3GGP 353 210-••G	993	96.0	95.8	0.83	293	7.0	1539	2.0	2.6	7.9	1520	75
200	230		M3GP 355 SMB	3GGP 353 220-••G	993	96.2	96.1	0.84	357	7.2	1923	2.2	2.7	9.7	1680	75
250	300		M3GP 355 SMC	3GGP 353 230-••G	993	96.5	96.3	0.83	450	7.4	2404	2.6	2.9	11.3	1820	75
315	360		M3GP 355 MLB	3GGP 353 420-••G	992	96.4	96.3	0.83	570	7.0	3032	2.5	2.7	13.5	2180	75
355	400		M3GP 355 LKA	3GGP 353 810-••G	993	96.5	96.3	0.83	640	6.8	3414	2.3	2.7	15.5	2500	78
400	450	2)	M3GP 400 LA	3GGP 403 510-••G	993	96.7	96.6	0.82	730	7.1	3847	2.3	2.7	17	2900	76
400	450	2)	M3GP 400 LKA	3GGP 403 810-••G	993	96.7	96.6	0.82	730	7.1	3847	2.3	2.7	17	2900	76
450	510	2)	M3GP 400 LB	3GGP 403 520-••G	994	96.9	96.7	0.82	818	7.4	4323	2.4	2.8	20.5	3150	76
450	510	2)	M3GP 400 LKB	3GGP 403 820-••G	994	96.9	96.7	0.82	818	7.4	4323	2.4	2.8	20.5	3150	76
500	560	2)	M3GP 400 LC	3GGP 403 530-••G	993	96.9	96.8	0.83	900	7.2	4808	2.5	2.7	22	3300	76
500	560	2)	M3GP 400 LKC	3GGP 403 830-••G	993	96.9	96.8	0.83	900	7.2	4808	2.5	2.7	22	3300	76
560	630	2)	M3GP 400 LD	3GGP 403 540-••G	993	96.9	96.8	0.85	985	7.4	5385	2.4	3.0	24	3400	77
560	630	2)	M3GP 400 LKD	3GGP 403 840-••G	993	96.9	96.8	0.85	985	7.4	5385	2.4	3.0	24	3400	77
630	710		M3GP 450 LA	3GGP 453 510-••G	994	97.0	97.0	0.84	1115	6.5	6052	1.1	2.5	31	4150	81
710	800		M3GP 450 LB	3GGP 453 520-••G	995	97.1	97.1	0.85	1240	7.0	6814	1.3	2.5	37	4500	81
800	900	1)	M3GP 450 LC	3GGP 453 530-••G	995	97.1	97.1	0.84	1415	7.2	7678	1.3	2.7	41	4800	81
1000 r/min = 6-poles					**400 V 50 Hz**						**High-output design**					
14	16.1	1)3)	M3GP 160 MLC	3GGP 163 430-••G	969	89.3	89.3	0.75	31	7.9	138	2.8	3.9	0.121	188	64
30	35		M3GP 200 MLC	3GGP 203 430-••G	983	91.9	91.8	0.81	60	7.5	292	3.5	3.4	0.49	305	65
45	52		M3GP 250 SMB	3GGP 253 220-••G	986	93.9	93.9	0.82	85	7.2	436	3.3	2.8	1.49	465	65
75	86		M3GP 280 SMC	3GGP 283 230-••G	990	95.1	95.2	0.84	137	7.3	723	2.8	2.7	2.85	725	66
18.5	21		M3GP 180 MLC	3GGP 183 430-••G	975	90.4	90.1	0.74	41	7.2	181	2.0	3.2	0.221	233	61
37	43		M3GP 225 SMC	3GGP 223 230-••G	983	93.0	93.1	0.83	70	7.1	359	3.0	2.8	0.75	380	64

1) Temperature rise class F.
2) For 400-415 V 50 Hz (380 V 50 Hz voltage code B).
3) Nominal power lower than CENELEC + 1.

The two bullets in the product code indicate choice of mounting arrangement, voltage and frequency (see ordering information).

Values above are given for 400 V 50 Hz; data for other voltages, frequencies and temperatures on request.

Process performance Non-sparking motors Ex nA

Technical data for totally enclosed squirrel cage three phase cast iron motors

ATEX Certified

IP 55. IC 411; Insulation class F. temperature rise class B

Output kW 50Hz	Output kW 60 Hz		Motor type	Product code	Speed r/min	Efficiency at FL 100%	Efficiency at FL 75%	Power factor cos φ	Current I_N A	Current I_s/I_N	Torque T_N Nm	Torque T_s/T_N	Torque T_{max}/T_N	Moment of inertia J = 1/4 GD²	Weight kg	Sound pressure level L_P dB(A)
750 r/min = 8-poles					**400 V 50 Hz**						**Basic design**					
0.18	**0.22**		**M3GP 80 MA**	3GGP 084 310-••G	720	54.0	49.0	0.48	1.08	3.3	2.4	3.7	4.0	0.0022	29	36
0.25	**0.3**		**M3GP 80 MB**	3GGP 084 320-••G	705	58.0	54.6	0.58	1.15	3.2	3.4	2.6	2.8	0.0022	29	36
0.37	**0.44**		**M3GP 90 SLA**	3GGP 094 010-••G	696	65.2	63.8	0.63	1.34	3.0	5.1	2.0	2.2	0.0036	41	36
0.55	**0.66**		**M3GP 90 SLC**	3GGP 094 030-••G	695	66.6	64.8	0.61	2.05	3.1	7.6	2.2	2.4	0.0037	43	36
0.75	**0.9**		**M3GP 100 LA**	3GGP 104 510-••G	720	74.7	72.4	0.59	2.6	3.8	10	2.0	2.9	0.012	57	54
1.1	**1.3**		**M3GP 100 LB**	3GGP 104 520-••G	717	75.2	73.0	0.57	3.9	3.7	15	2.1	2.9	0.012	57	54
1.5	**1.7**		**M3GP 112 MC**	3GGP 114 330-••G	713	75.7	73.8	0.59	5	3.5	20	2.0	2.7	0.014	61	54
2.2	**2.5**		**M3GP 132 SMC**	3GGP 134 230-••G	720	79.6	78.6	0.65	6.3	4.7	29	2.0	2.9	0.034	95	59
3	**3.5**		**M3GP 132 SMD**	3GGP 134 240-••G	710	80.2	80.4	0.70	8	4.1	40	1.7	2.3	0.036	97	59
4	**4.6**		**M3GP 160 MLA**	3GGP 164 410-••G	717	83.7	83.8	0.71	10.1	5.2	53	1.8	2.8	0.071	146	59
5.5	**6.3**		**M3GP 160 MLB**	3GGP 164 420-••G	715	84.7	85.2	0.71	13.9	5.2	73	1.9	2.8	0.09	160	53
7.5	**8.6**		**M3GP 160 MLC**	3GGP 164 430-••G	718	86.9	87.6	0.70	18.4	5.7	100	2.1	3.1	0.121	188	55
11	**12.7**		**M3GP 180 MLB**	3GGP 184 420-••G	724	90.3	90.4	0.73	24.5	5.7	145	1.7	2.7	0.239	227	63
15	**17**		**M3GP 200 MLA**	3GGP 204 410-••G	734	90.7	90.8	0.79	31	7.0	195	2.4	3.2	0.45	280	56
18.5	**21**		**M3GP 225 SMA**	3GGP 224 210-••G	734	90.8	90.8	0.74	41	6.1	241	2.2	3.0	0.61	335	55
22	**25**		**M3GP 225 SMB**	3GGP 224 220-••G	732	91.0	91.3	0.77	46	6.5	287	2.2	2.9	0.68	350	56
30	**35**		**M3GP 250 SMA**	3GGP 254 210-••G	735	92.3	92.4	0.79	61	6.7	390	2.0	2.9	1.25	420	56
37	**43**		**M3GP 280 SMA**	3GGP 284 210-••G	741	93.4	93.3	0.78	74	7.3	477	1.7	3.0	1.85	605	65
45	**55**		**M3GP 280 SMB**	3GGP 284 220-••G	741	94.1	93.8	0.78	90	7.6	580	1.8	3.1	2.2	645	65
55	**63**		**M3GP 315 SMA**	3GGP 314 210-••G	742	94.1	94.0	0.81	104	7.1	708	1.6	2.7	3.2	830	62
75	**85**		**M3GP 315 SMB**	3GGP 314 220-••G	741	94.5	94.4	0.82	141	7.1	968	1.7	2.7	4.1	930	62
90	**105**		**M3GP 315 SMC**	3GGP 314 230-••G	741	94.8	94.7	0.82	167	7.4	1161	1.8	2.7	4.9	1000	64
110	**125**		**M3GP 315 MLA**	3GGP 314 410-••G	740	95.0	95.0	0.83	203	7.3	1420	1.8	2.7	5.8	1150	72
132	**155**		**M3GP 355 SMA**	3GGP 354 210-••G	744	95.7	95.6	0.80	250	7.5	1694	1.5	2.6	7.9	1520	69
160	**185**		**M3GP 355 SMB**	3GGP 354 220-••G	744	95.7	95.6	0.80	305	7.6	2054	1.6	2.6	9.7	1680	69
200	**230**		**M3GP 355 SMC**	3GGP 354 230-••G	743	95.7	95.6	0.80	378	7.4	2570	1.6	2.6	11.3	1820	69
250	**275**	2)	**M3GP 355 MLB**	3GGP 354 420-••G	743	95.9	95.8	0.80	476	7.5	3213	1.6	2.7	13.5	2180	72
315	**360**	2)	**M3GP 400 LA**	3GGP 404 510-••G	744	96.4	96.3	0.81	582	7.0	4043	1.2	2.6	17	2900	71
315	**360**	2)	**M3GP 400 LKA**	3GGP 404 810-••G	744	96.4	96.3	0.81	582	7.0	4043	1.2	2.6	17	2900	71
355	**400**	2)	**M3GP 400 LKB**	3GGP 404 820-••G	743	96.5	96.5	0.83	640	6.8	4563	1.2	2.5	21	3200	71
355	**400**	2)	**M3GP 400 LB**	3GGP 404 520-••G	743	96.5	96.5	0.83	640	6.8	4563	1.2	2.5	21	3200	71
400	**420**	2)	**M3GP 400 LC**	3GGP 404 530-••G	744	96.6	96.5	0.82	735	7.4	5134	1.3	2.7	24	3400	71
400	**420**	2)	**M3GP 400 LKC**	3GGP 404 830-••G	744	96.6	96.5	0.82	735	7.4	5134	1.3	2.7	24	3400	71
450	**500**		**M3GP 450 LA**	3GGP 454 510-••G	744	96.3	96.4	0.83	812	6.0	5776	1.0	2.5	26	3750	82
500	**560**		**M3GP 450 LB**	3GGP 454 520-••G	744	96.4	96.4	0.83	900	6.4	6418	1.0	2.6	29	4000	82
560	**630**		**M3GP 450 LC**	3GGP 454 530-••G	744	96.6	96.5	0.82	1020	7.0	7188	1.2	2.9	35	4350	82
630	**710**	1)	**M3GP 450 LD**	3GGP 454 540-••G	745	96.7	96.6	0.81	1160	7.6	8075	1.3	3.2	41	4800	82
750 r/min = 8-poles					**400 V 50 Hz**						**High-output design**					
18.5	**21**		**M3GP 200 MLB**	3GGP 204 420-••G	734	90.6	90.8	0.80	37.5	6.9	241	2.2	3.2	0.54	300	57
30	**34**	1)	**M3GP 225 SMC**	3GGP 224 230-••G	731	90.6	91.0	0.77	63	6.3	392	2.3	3.0	0.75	375	59
37	**43**		**M3GP 250 SMB**	3GGP 254 220-••G	737	93.0	92.9	0.78	75	7.5	479	2.3	3.4	1.52	465	59
55	**65**		**M3GP 280 SMC**	3GGP 284 230-••G	741	94.4	94.3	0.80	105	7.9	709	1.9	3.1	2.85	725	65

[1] Temperature rise class F.
[2] For 400-415 V 50 Hz (380 V 50 Hz voltage code B).

The two bullets in the product code indicate choice of mounting arrangement, voltage and frequency (see ordering information).

Values above are given for 400 V 50 Hz; data for other voltages, frequencies and temperatures on request.

Rating plates

For motor sizes 71 to 132 the rating plate gives one current value for the voltage area. That is the highest current that can occur within the voltage area with the given output.

For motor sizes 160 to 450 the rating plate is in table form giving values for speed, current and power factor for six voltages.

European standards require a special marking on safety motors. The marking shall include the following:
- type of protection
- apparatus group
- temperature class
- name of certifying body
- certificate number

M3GP 80-450

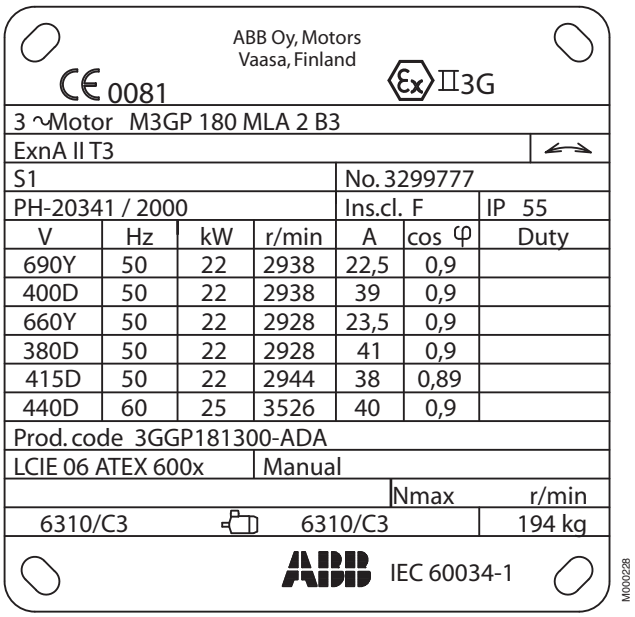

5

Process performance Non-sparking motors - Variant codes

Code [1] / Variant		80	90	100	112	132	160	180	200	225	250	280	315	355	400	450
Balancing																
052	Vibration acc. to Grade A (IEC 60034-14).	S	S	S	S	S	S	S	S	S	S	S	S	S	S	S
417	Vibration acc. to Grade B (IEC 60034-14).	P	P	P	P	P	P	P	P	P	P	P	P	P	P	P
424	Full key balancing.	P	P	P	P	P	P	P	P	P	P	P	P	P	P	P
Bearings and Lubrication																
036	Transport lock for bearings.	NA	NA	NA	NA	NA	M	M	M	M	M	P	P	P	P	P
037	Roller bearing at D-end.	NA	NA	NA	NA	NA	M	M	M	M	M	M	M	NA	NA	NA
040	Heat resistant grease.	NA	NA	NA	NA	NA	S	S	S	S	S	S	S	S	S	S
041	Bearings regreasable via grease nipples.	NA	NA	NA	NA	NA	S	S	S	S	S	S	S	S	S	S
043	SPM nipples.	NA	NA	NA	NA	NA	S	S	S	S	S	S	S	S	S	S
058	Angular contact bearing at D-end, shaft force away from bearing.	NA	NA	NA	NA	NA	P	P	P	P	P	P	P	P	P	P
107	Pt100 2-wire in bearings.	NA	NA	NA	NA	NA	P	P	P	P	P	P	P	P	P	P
130	Pt100 3-wire in bearings.	NA	NA	NA	NA	NA	P	P	P	P	P	P	P	P	P	P
194	2Z bearings greased for life at both ends.	S	S	S	S	S	M	M	M	M	M	NA	NA	NA	NA	NA
433	Outlet grease collector.	NA	NA	NA	NA	NA	NA	NA	NA	NA	NA	P	P	P	P	P
796	Grease nipples JIS B 1575 PT 1/8 Type A.	NA	NA	NA	NA	NA	P	P	P	P	P	P	P	P	P	P
797	Stainless steel SPM nipples.	NA	NA	NA	NA	NA	M	M	M	M	M	M	M	P	P	P
798	Stainless steel grease nipples.	NA	NA	NA	NA	NA	M	M	M	M	M	M	M	P	P	P
Brakes																
412	Built-on brake.	NA	NA	NA	NA	NA	R	R	R	R	R	R	R	R	R	R
Branch standard designs																
142	“Manilla connection”	NA	NA	NA	NA	NA	R	R	R	R	R	R	R	R	R	R
178	Stainless steel / acid proof bolts.	P	P	P	P	P	M	M	M	M	M	M	M	P	P	P
204	Jacking bolts for foot mounted motors	NA	NA	NA	NA	NA	P	P	P	P	P	P	P	S	S	S
209	Non-standard voltage or frequency, (special winding).	P	P	P	P	P	P	P	P	P	P	P	P	P	P	P
396	Motor designed for ambient temperature -20°C to -40°C, wtih space heaters (code 450/451 must be added).	R	R	R	R	R	P	P	P	P	P	P	P	P	P	P
397	Motor designed for ambient temperature -40°C to -55°C, wtih space heaters (code 450/451 must be added).	R	R	R	R	R	P	P	P	P	P	P	P	P	P	P
398	Motor designed for ambient temperature -20°C to -40°C.	R	R	R	R	R	P	P	P	P	P	P	P	P	P	P
399	Motor designed for ambient temperature -40°C to -55°C.	R	R	R	R	R	P	P	P	P	P	P	P	P	P	P
425	Corrosion protected stator and rotor core.	S	S	S	S	S	S	S	S	S	S	P	P	P	P	P
786	Special design shaft upwards (V3, V36, V6) for outdoor mounting.	R	R	R	R	R	P	P	P	P	P	NA	NA	NA	NA	NA
Cooling system																
044	Unidirectional fan for reduced noice level. Rotation clockwise seen from D-end. Available only for 2-pole motors.	NA	NA	NA	NA	NA	NA	NA	NA	NA	NA	P	P	P	S	S
045	Unidirectional fan for reduced noice level. Rotation counter clockwise seen from D-end. Available only for 2-pole motors.	NA	NA	NA	NA	NA	NA	NA	NA	NA	NA	P	P	P	S	S
068	Metal fan.	P	P	P	P	P	M	M	M	M	M	M	M	P	P	P
075	Cooling method IC418 (without fan).	R	R	R	R	R	R	R	R	R	R	R	R	R	NA	NA
183	Separate motor cooling (fan axial, N-end).	NA	NA	NA	NA	NA	P	P	P	P	P	P	P	P	P	P
422	Separate motor cooling (fan top or side, N-end).	NA	NA	NA	NA	NA	NA	NA	NA	NA	NA	P	P	P	P	P
791	Stainless steel fan cover.	NA	NA	NA	NA	NA	NA	NA	NA	P	P	P	P	P	P	P

[1] Certain variant codes cannot be used simultaneously.

S = Included as standard.
M = On modification of a stocked motor, or on new manufacture, the number per order may be limited.
P = New manufacture only.
R = On request.
NA = Not applicable

5

Code [1] / Variant		80	90	100	112	132	160	180	200	225	250	280	315	355	400	450
Coupling																
035	Assembly of customer supplied coupling-half.	R	R	R	R	R	P	P	P	P	P	P	P	P	P	P
Documentation																
141	Binding dimension drawing.	P	P	P	P	P	M	M	M	M	M	M	M	M	M	M
Drain holes																
065	Plugged existing drain holes.	P	P	P	P	P	M	M	M	M	M	M	M	P	P	P
448	Draining holes with metal plugs.	NA	NA	NA	NA	NA	P	P	P	P	P	P	P	P	P	P
Earthing Bolt																
067	External earthing bolt.	M	M	M	M	M	S	S	S	S	S	S	S	S	S	S
Hazardous Environments																
407	Ex N design, fulfilling BS5000/16, certificate provided.	NA	NA	NA	NA	NA	NA	NA	NA	NA	NA	NA	NA	NA	NA	NA
449	Ex n design, according to Australian Standard AS 2380.9	NA	NA	NA	NA	NA	M	M	M	M	M	M	M	NA	NA	NA
452	DIP/Ex tD acc. to ATEX directive 94/9/EC, T= 125°C, cat. 3D, IP55.	M	M	M	M	M	M	M	M	M	M	M	M	P	P	P
453	DIP/Ex tD acc. to ATEX directive 94/9/EC, T= 125°C, cat. 2D, IP65.	M	M	M	M	M	M	M	M	M	M	M	M	P	P	NA
456	Ex nA design, fulfilling IEC 60079-15, with certificate.	M	M	M	M	M	M	M	M	M	M	M	M	M	M	M
480	Ex nA II acc. to ATEX directive 94/9/EC, temp. class T3.	S	S	S	S	S	S	S	S	S	S	S	S	S	S	S
804	DIP/Ex tD, IEC 61241, T125 °C, IP55 (zone 22).	M	M	M	M	M	M	M	M	M	M	M	M	P	P	P
805	DIP/Ex tD, IEC 61241, T125 °C, IP65 (zone 21).	M	M	M	M	M	M	M	M	M	M	M	M	P	P	NA
806	DIP/Ex tD, IEC 61241, T125 °C, IP65 (zone 22).	M	M	M	M	M	M	M	M	M	M	M	M	P	P	NA
807	CSA design, Class I, Div 2 Group A, B, C, D T3.	NA	NA	NA	NA	NA	P	P	P	P	P	P	P	P	P	P
814	Ex tD (DIP) motors, temperature class T 150C.	M	M	M	M	M	M	M	M	M	M	M	M	P	P	P
Heating elements																
450	Heating element, 100-120V.	P	P	P	P	P	M	M	M	M	M	M	M	P	P	P
451	Heating element, 200-240V.	P	P	P	P	P	M	M	M	M	M	M	M	P	P	P
Insulation system																
014	Winding insulation class H.	NA	NA	NA	NA	NA	P	P	P	P	P	P	P	P	P	P
405	Special winding insulation for frequency converter supply.	NA	NA	NA	NA	NA	P	P	P	P	P	P	P	P	P	P
406	Winding for supply >690<=1000 Volts.	NA	NA	NA	NA	NA	NA	NA	NA	NA	NA	P	P	P	P	P
Mounting arrangements																
008	IM 2101 foot/flange mounted, IEC flange, from IM 1001 (B34 from B3).	P	P	P	NA	NA	NA	NA	NA	NA	NA	NA	NA	NA	NA	NA
009	IM 2001 foot/flange mounted, IEC flange, from IM 1001 (B35 from B3).	P	P	P	P	P	M	M	M	M	M	M	M	P	P	P
047	IM 3601 flange mounted, IEC flange, from IM 3001 (B14 from B5).	P	P	P	P	P	NA	NA	NA	NA	NA	NA	NA	NA	NA	NA
066	Modified for non-standard mounting position (please specify IM xxxx), (must be ordered for all mounting arrangements exluding IM B3 (1001) and IM B5 (3001).	P	P	P	P	P	M	M	M	M	M	M	M	M	P	P
228	Flange FF 130.	P	P	P	P	NA	NA	NA	NA	NA	NA	NA	NA	NA	NA	NA
305	Additional lifting lugs.	NA	NA	NA	NA	NA	NA	NA	NA	NA	NA	P	P	P	P	P
Noise reduction																
055	Noise reducing cover.	NA	NA	NA	NA	NA	NA	NA	NA	NA	NA	P	P	P	P	P
Painting																
106	Paint thickness = 80 µm.	S	S	S	S	S	S	S	S	S	S	S	S	S	S	S
109	Paint thickness = 120 µm.	NA	NA	NA	NA	NA	M	M	M	M	M	M	M	P	P	P

[1] Certain variant codes cannot be used simultaneously.

S = Included as standard.
M = On modification of a stocked motor, or on new manufacture, the number per order may be limited.
P = New manufacture only.
R = On request.
NA = Not applicable

5

Code [1] / Variant		80	90	100	112	132	160	180	200	225	250	280	315	355	400	450
110	Paint thickness = 160 µm.	NA	NA	NA	NA	NA	M	M	M	M	M	M	M	P	P	P
111	Offshore two-pack polyamide cured epoxy paint 160 µm.	P	P	P	P	P	M	M	M	M	M	P	P	P	P	P
114	Special paint colour, standard grade.	P	P	P	P	P	M	M	M	M	M	M	M	P	P	P
115	Offshore zink primer painting.	P	P	P	P	P	P	P	P	P	P	P	P	P	P	P
179	Special paint specification.	R	R	R	R	R	R	R	R	R	R	R	R	R	R	R
Protection																
005	Metal protective roof, vertical motor, shaft down.	P	P	P	P	P	M	M	M	M	M	M	M	M	M	M
072	Radial seal at D-end.	P	P	P	P	P	M	M	M	M	M	P	P	P	P	P
073	Sealed against oil at D-end.	NA	NA	NA	NA	NA	P	P	P	P	P	P	P	P	P	P
076	Draining holes with plugs. Felt plugs.	P	P	P	P	P	NA	NA	NA	NA	NA	NA	NA	NA	NA	NA
157	Terminal box degree of protection IP65.	M	M	M	M	M	M	M	M	M	M	M	M	P	P	NA
158	Degree of protection IP65.	P	P	P	P	P	M	M	M	M	M	M	M	P	P	NA
211	Weather protected, IP xx W	R	R	R	R	R	R	R	R	R	R	R	R	R	R	R
403	Degree of protection IP56.	P	P	P	P	P	M	M	M	M	M	M	M	P	P	P
404	Degree of protection IP56, without fan and fan cover	NA	NA	NA	NA	NA	P	P	P	P	P	P	P	NA	NA	NA
434	Degree of protection IP56, open deck.	R	R	R	R	R	P	P	P	P	P	P	P	P	P	NA
783	Labyrinth sealing at D-end.	NA	NA	NA	NA	NA	P	P	P	P	P	P	P	S	S	S
Rating & instruction plates																
002	Restamping voltage, frequency and output, continuous duty.	P	P	P	P	P	M	M	M	M	M	M	M	P	P	P
095	Restamping output (maintained voltage, frequency), intermittent duty.	R	R	R	R	R	M	M	M	M	M	R	R	R	R	R
098	Stainless rating plate.	S	S	S	S	S	S	S	S	S	S	S	S	S	S	S
135	Mounting of additional identification plate, stainless.	P	P	P	P	P	M	M	M	M	M	M	M	P	P	P
139	Additional identification plate delivered loose.	P	P	P	P	P	M	M	M	M	M	M	M	P	P	P
161	Additional rating plate delivered loose.	P	P	P	P	P	M	M	M	M	M	M	M	P	P	P
163	Frequency converter rating plate. Rating data according to quotation.	P	P	P	P	P	M	M	M	M	M	M	M	P	P	P
Shaft & rotor																
069	Two shaft extensions as per basic catalogue.	NA	NA	NA	NA	NA	P	P	P	P	P	P	P	P	P	P
070	One or two special shaft extensions, standard shaft material.	NA	NA	NA	NA	NA	P	P	P	P	P	P	P	P	P	P
164	Shaft extension with closed key-way.	R	R	R	R	R	S	S	S	S	S	R	R	R	R	R
165	Shaft extension with open key-way.	S	S	S	S	S	R	R	R	R	R	S	S	S	S	S
410	Stainless steel shaft (standard or non-standard design).	NA	NA	NA	NA	NA	R	R	R	R	R	P	P	P	P	P
Standards and Regulations																
152	Classified shaft material.	NA	NA	NA	NA	NA	R	R	R	R	R	R	R	R	R	R
421	VIK design (Verband der Industriellen Energie- und Kraftwirtschaft e.V.).	P	P	P	P	P	P	P	P	P	P	P	P	P	P	R
758	Saudi Aramco design.	NA	NA	NA	NA	NA	P	P	P	P	P	P	P	P	NA	NA
773	EEMUA No 132 1988 design.	NA	NA	NA	NA	NA	P	P	P	R	R	R	R	R	R	R
774	Design according to NORSOK (Norwegian Territorial Waters).	R	R	R	R	R	P	P	P	P	P	P	P	P	P	R
775	Design according to SHELL DEP 33.66.05.31-Gen. January 1999 design.	P	P	P	P	P	M	M	M	M	M	M	M	P	P	NA
778	GOST Export/Import Certificate (Russia).	P	P	P	P	P	M	M	M	M	M	M	M	P	P	P
779	SASO Export/Import Certificate (Saudi Arabia).	NA	NA	NA	NA	NA	M	M	M	M	M	M	M	P	P	P
782	Fulfilling CQST Certification requirements (China).	P	P	P	P	P	M	M	M	M	M	M	M	P	P	P

[1] Certain variant codes cannot be used simultaneously.

S = Included as standard.
M = On modification of a stocked motor, or on new manufacture, the number per order may be limited.

P = New manufacture only.
R = On request.
NA = Not applicable

5

Code [1] / Variant		80	90	100	112	132	160	180	200	225	250	280	315	355	400	450
Stator winding temperature sensors																
120	KTY 84-130 (1 per phase) in stator winding	P	P	P	P	P	P	P	P	P	P	P	P	P	P	P
435	PTC -thermistors (3 in series), 130°C, in stator winding.	P	P	P	P	P	M	M	M	M	M	M	M	P	P	P
436	PTC -thermistors (3 in series), 150°C, in stator winding.	S	S	S	S	S	S	S	S	S	S	S	S	S	S	S
438	PTC -thermistors (3 in series), 190°C, in stator winding.	NA	NA	NA	NA	NA	P	P	P	P	P	P	P	P	P	P
439	PTC -thermistors (2x3 in series), 150°C, in stator winding.	P	P	P	P	P	M	M	M	M	M	M	M	P	P	P
441	PTC - thermistors (3 in series, 130°C & 3 in series, 150°C), in stator winding.	P	P	P	P	P	M	M	M	M	M	M	M	P	P	NA
445	Pt-100 2-wire in stator winding, 1 per phase	NA	NA	NA	NA	NA	P	P	P	P	P	P	P	P	P	P
446	Pt-100 2-wire in stator winding, 2 per phase	NA	NA	NA	NA	NA	P	P	P	P	P	P	P	P	P	P
502	Pt-100 3-wire in stator winding, 1 per phase	NA	NA	NA	NA	NA	P	P	P	P	P	P	P	P	P	P
503	Pt-100 3-wire in stator winding, 2 per phase	NA	NA	NA	NA	NA	P	P	P	P	P	P	P	P	P	P
Terminal box																
021	Terminal box LHS (seen from D-end).	NA	NA	NA	NA	NA	P	P	P	P	P	P	P	P	P	NA
022	Cable entry LHS (seen from D-end).	P	P	P	P	P	M	M	M	M	M	M	M	P	P	P
137	Extended cable connection, low terminal box, “Flying leads”.	NA	NA	NA	NA	NA	P	P	P	P	P	P	P	P	P	NA
157	Terminal box degree of protection IP65.	P	P	P	P	P	M	M	M	M	M	M	M	P	P	NA
180	Terminal box RHS (seen from D-end).	P	P	P	P	P	P	P	P	P	P	P	P	P	P	NA
187	Cable glands of non-standard design.	NA	NA	NA	NA	NA	R	R	R	R	R	R	R	R	R	R
380	Separate terminal box for temperature detectors, std. material.	NA	NA	NA	NA	NA	P	P	P	P	P	P	P	P	P	P
400	4 x 90 degr turnable terminal box	S	S	S	S	S	M	M	S	S	S	S	S	S	S	NA
402	Terminal box adapted for Al cables.	NA	NA	NA	NA	NA	NA	NA	NA	NA	NA	S	S	S	S	S
413	Extended cable connection, no terminal box.	NA	NA	NA	NA	NA	NA	NA	NA	NA	NA	P	P	P	P	NA
418	Separate terminal box for auxiliaries, std. Material.	NA	NA	NA	NA	NA	P	P	P	P	P	P	P	P	P	P
447	Top mounted separate terminal box for monitoring equipment.	NA	NA	NA	NA	NA	NA	NA	NA	NA	NA	M	M	P	NA	NA
466	Terminal box at N-end.	NA	NA	NA	NA	NA	R	R	R	R	R	P	P	P	P	NA
468	Cable entry from D-end.	P	P	P	P	P	M	M	M	M	M	P	P	P	P	NA
469	Cable entry from N-end.	P	P	P	P	P	M	M	M	M	M	P	P	P	P	NA
567	Separate terminal box material: Cast Iron.	NA	NA	NA	NA	NA	P	P	P	P	P	P	P	P	P	P
568	Separate terminal box for heating elements, std. material.	NA	NA	NA	NA	NA	P	P	P	P	P	P	P	P	P	P
569	Separate terminal box for brakes.	NA	NA	NA	NA	NA	P	P	P	P	P	P	P	P	P	P
729	Cable flanges without holes/ Blank gland plates.	P	P	P	P	P	P	P	P	P	P	P	P	P	P	P
730	Prepared for NPT cable glands.	P	P	P	P	P	P	P	P	P	P	P	P	P	P	P
732	Standard cable gland, Ex d IIB, armoured cable.	NA	NA	NA	NA	NA	M	M	M	M	M	M	M	P	P	P
733	Standard cable gland, Ex d IIB, non-armoured cable.	NA	NA	NA	NA	NA	M	M	M	M	M	M	M	P	P	P
736	Standard cable gland Ex e acc. to EN-standards.	P	P	P	P	P	S	S	S	S	S	S	S	S	S	S
737	Standard cable gland Ex e with clamping device acc. to EN-standards.	P	P	P	P	P	M	M	M	M	M	M	M	P	P	P
741	Motor equipped with E x e terminal box (EN 50019)	NA	NA	NA	NA	NA	M	M	M	M	M	M	M	P	P	P
743	Painted flange for cable glands.	NA	NA	NA	NA	NA	M	M	M	M	M	M	M	P	P	P
744	Stainless steel flange for cable glands.	NA	NA	NA	NA	NA	M	M	M	M	M	M	M	P	P	P
745	Painted steel flange equipped with brass cable glands.	P	P	P	P	P	M	M	M	M	M	M	M	P	P	P
746	Stainless steel cable flange equipped with standard brass cable glands.	NA	NA	NA	NA	NA	P	P	P	P	P	P	P	P	P	P

[1] Certain variant codes cannot be used simultaneously.

S = Included as standard.
M = On modification of a stocked motor, or on new manufacture, the number per order may be limited.

P = New manufacture only.
R = On request.
NA = Not applicable

Code [1] / Variant		80	90	100	112	132	160	180	200	225	250	280	315	355	400	450
Testing																
145	Type test report from a catalogue motor, 400V 50Hz.	P	P	P	P	P	M	M	M	M	M	M	M	P	P	P
146	Type test with report for motor from specific delivery batch.	R	R	R	R	R	P	P	P	P	P	P	P	P	P	P
148	Routine test report.	P	P	P	P	P	M	M	M	M	M	M	M	P	P	P
150	Customer witnessed testing. Specify test procedure with other codes.	P	P	P	P	P	P	P	P	P	P	P	P	P	P	P
221	Type test and multi-point load test with report for motor from specific delivery batch.	P	P	P	P	P	P	P	P	P	P	P	P	P	P	R
222	Torque/speed curve, type test and multi-point load test with report for motor from specific delivery batch.	P	P	P	P	P	P	P	P	P	P	P	P	P	P	P
760	Vibration level test	P	P	P	P	P	M	M	M	M	M	M	M	P	P	P
761	Vibration spectrum test.	P	P	P	P	P	P	P	P	P	P	P	P	P	P	P
762	Noise level test.	P	P	P	P	P	M	M	M	M	M	M	M	P	P	P
763	Noise spectrum test.	P	P	P	P	P	P	P	P	P	P	P	P	P	P	P
764	Test with ABB frequency converter available at ABB test field. ABB standard test procedure.	P	P	P	P	P	P	P	P	P	P	P	P	P	P	P
Variable speed drives																
182	Pulse sensor mounted as specified.	NA	NA	NA	NA	NA	P	P	P	P	P	P	P	P	P	P
429	Separate motor cooling (fan top, N-end) and 1024 pulse tacho (Leine & Linde 861) mounted.	NA	NA	NA	NA	NA	NA	NA	NA	NA	NA	P	P	P	P	P
470	Prepared for hollow shaft pulse tacho (L&L equivalent).	NA	NA	NA	NA	NA	P	P	P	P	P	P	P	P	P	P
472	1024 pulse tacho (L&L 861).	NA	NA	NA	NA	NA	P	P	P	P	P	P	P	P	P	P
473	2048 pulse tacho (L&L 861).	NA	NA	NA	NA	NA	P	P	P	P	P	P	P	P	P	P
474	Separate motor cooling (fan axial, N-end) and prepared for hollow shaft tacho (L&L equivalent).	NA	NA	NA	NA	NA	P	P	P	P	P	P	P	P	P	P
476	Separate motor cooling (fan axial, N-end) and 1024 pulse tacho (L&L 861).	NA	NA	NA	NA	NA	R	R	R	R	R	R	R	R	R	R
477	Separate motor cooling (fan axial, N-end) and 2048 pulse tacho (L&L 861).	NA	NA	NA	NA	NA	R	R	R	R	R	R	R	R	R	R
478	Separate motor cooling (fan top, N-end) and prepared for hollow shaft tacho (L&L equivalent).	NA	NA	NA	NA	NA	NA	NA	P	P	P	P	P	P	P	P
479	Mounting of other type of pulse tacho with shaft extension, tacho not included.	NA	NA	NA	NA	NA	R	R	R	R	R	P	P	P	P	P
486	Separate motor cooling (fan top, N-end) and prepared for DC-tacho.	NA	NA	NA	NA	NA	NA	NA	P	P	P	P	P	P	P	P
510	Separate motor cooling (fan top, N-end) and 2048 pulse tacho (Leine & Linde 861) mounted	NA	NA	NA	NA	NA	NA	NA	NA	NA	NA	P	P	P	P	P
680	2048 pulse tacho, Ex d, tD, L&L 841910001	NA	NA	NA	NA	NA	R	R	R	R	R	R	R	R	R	R
701	Insulated bearing at N-end.	NA	NA	NA	NA	NA	NA	NA	NA	NA	NA	M	M	P	P	P
704	EMC cable gland.	NA	NA	NA	NA	NA	M	M	M	M	M	M	M	P	P	P
747	1024 pulse tacho, Ex d, tD, L&L 841910002	NA	NA	NA	NA	NA	R	R	R	R	R	R	R	R	R	R
Y/D starting																
117	Terminals for Y/D start at both speeds (two speed windings).	NA	NA	NA	NA	NA	R	R	R	R	R	P	P	R	R	R
118	Terminals for Y/D start at high speed (two speed windings).	NA	NA	NA	NA	NA	R	R	R	R	R	P	P	R	R	R
119	Terminals for Y/D start at low speed (two speed windings).	NA	NA	NA	NA	NA	R	R	R	R	R	P	P	R	R	R

[1] Certain variant codes cannot be used simultaneously.

S = Included as standard.
M = On modification of a stocked motor, or on new manufacture, the number per order may be limited.

P = New manufacture only.
R = On request.
NA = Not applicable

5

Non-sparking motors, cast iron frame

Dimension drawings

Foot-mounted motor IM 1001, IM B3 Flange-mounted motor IM 3001, IM B5

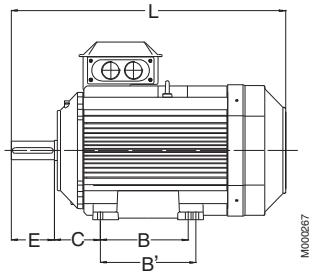

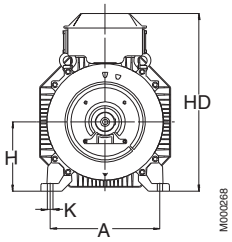

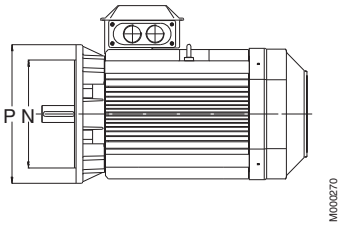

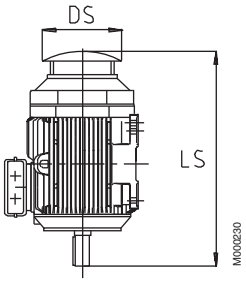

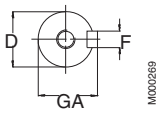

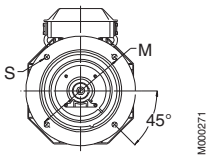

Sizes 71-200

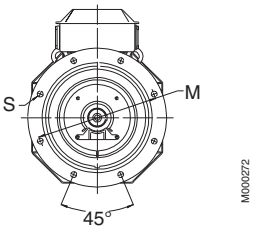

Sizes 225-400

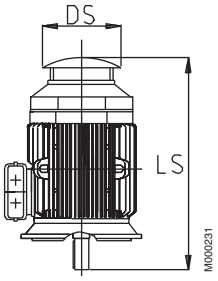

Protective roof, variant code 005

Motor size	IM 1001, IM B3 AND IM 3001, IM B5											IM 1001, IM B3							IM 3001, IM B5				Protective roof		
	D		GA		F		E		L max		O	A	B	B'	C	HD	K	H	M	N	P	S	DS	LS	
	poles		poles		poles		poles		poles															poles	
	2	4-8	2	4-8	2	4-8	2	4-8	2	4-8														2	4-8
80	19	19	21.5	21.5	6	6	40	40	340	340	20	125	100	125	50	235	10	80	165	130	200	12	160	360	360
90	24	24	27	27	8	8	50	50	405	405	20	140	100	125	56	260	10	90	165	130	200	12	180	430	430
100	28	28	31	31	8	8	60	60	440	440	25	160	140	–	63	280	12	100	215	180	250	14.5	195	465	465
112	28	28	31	31	8	8	60	60	440	440	25	190	140	–	70	295	12	112	215	180	250	14.5	195	465	465
132	38	38	41	41	10	10	80	80	540	540	30	216	140	178	89	340	12	132	265	230	300	14.5	260	570	570
160	42	42	45	45	12	12	110	110	711	711	45	254	210	254	108	388	14.5	160	300	250	350	18.5	328	756	756
180	48	48	51.5	51.5	14	14	110	110	706	706	50	279	241	279	121	426	14.5	180	300	250	350	18.5	359	756	756
200	55	55	59	59	16	16	110	110	774	774	70	318	267	305	133	536	18.5	200	350	300	400	18.5	414	844	844
225	55	60	59	64	16	18	110	140	841	871	80	356	286	311	149	583	18.5	225	400	350	450	18.5	462	921	951
250	60	65	64	69	18	18	140	140	875	875	90	406	311	349	168	646	24	250	500	450	550	18.5	506	965	965
280	65	75	69	79.5	18	20	140	140	1088	1088	100	457	368	419	190	759	24	280	500	450	550	18	555	1190	1190
315 SM_	65	80	69	85	18	22	140	170	1174	1204	115	508	406	457	216	852	30	315	600	550	660	23	624	1290	1320
315 ML_	65	90	69	95	18	25	140	170	1285	1315	115	508	457	508	216	852	30	315	600	550	660	23	624	1401	1431
355 SM_	70	100	62.5	90	20	28	140	210	1409	1479	130	610	500	560	254	958	35	355	740	680	800	23	720	1476	1546
355 ML_	70	100	62.5	90	20	28	140	210	1514	1584	130	610	560	630	254	958	35	355	740	680	800	23	720	1528	1703
355 LK_	70	100	62.5	90	20	28	140	210	1764	1834	130	610	710	900	254	958	35	355	740	680	800	23	720	1633	1703
400 L_	80	110	85	126	22	28	170	210	1851	1891	150	710	900	1000	224	1045	35	400	940	880	1000	28	810	1860	1900
400 LK_	80	100	85	106	22	28	170	210	1851	1891	150	686	710	800	280	1045	35	400	740	680	800	24	810	1860	1900
450	80	120	85	127	22	32	170	210	2147	2187	180	800	1000	1120	250	1169	42	450	1080	1000	1150	28	On request		

IM 3601, IM B14 - Available flange alternatives, see also variant codes.

Flange size	Variant code	Flange dimensions				Motor sizes 80-132				
		P	M	N	S	80	90	100	112	132
FF100	258	120	100	80	M6	S	NA	NA	NA	NA
FF115	260	140	115	95	M8	M	S	NA	NA	NA
FF130	229	160	130	110	M8	M	M	S	S	NA
FF165	236	200	165	130	M10	NA	NA	NA	NA	S
FF215	246	250	215	180	M12	NA	NA	M	M	M
FF265	256	300	265	230	M12	NA	NA	NA	NA	M
FT100	257	120	100	80	M7	S	M	NA	NA	NA
FT115	259	140	115	95	M10	M	S	NA	NA	NA
FT130	228	160	130	110	M10	M	M	S	S	NA
FT165	235	200	165	130	M12	M	M	M	M	S
FT215	245	250	215	180	M14.5	NA	NA	M	M	M
FT265	255	300	265	230	M14.5	NA	NA	NA	NA	M

S = Standard
M = Modification
NA = Not possible

Tolerances:

A, B	± 0,8	**H**	-0.5
D, DA	ISO k6 < Ø 50mm ISO m6 > Ø 50mm	**N**	ISO j6
F, FA	ISO h9	**C, CA**	± 0.8

Above table gives the main dimensions in mm.

For detailed drawings please check our web-site 'www.abb.com/motors&generators' or contact ABB.

Dimension drawings

Non-sparking motors, cast iron frame

Terminal boxes, standard design with 6 terminals

Motor sizes 80 - 132

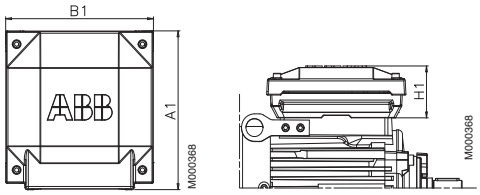

Motor sizes 160 - 180

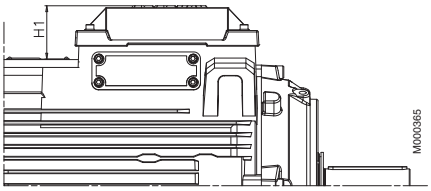

Motor sizes 200 - 250

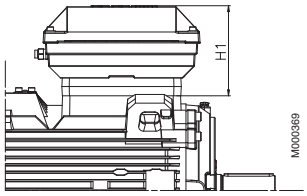

Motor sizes 280 - 315
Top- and side-mounted
Terminal boxes 210, 370

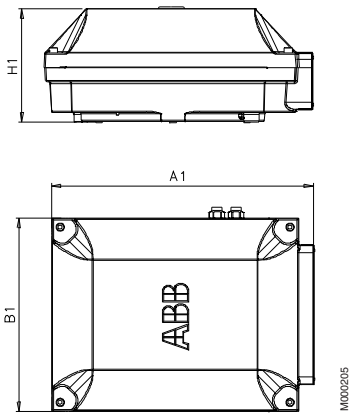

Motor sizes 355 - 450
Top-mounted
Terminal box 750 + adapter

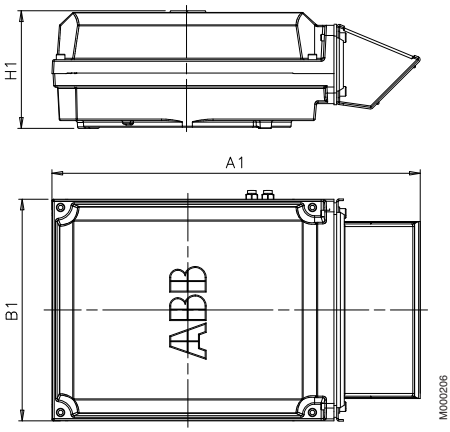

Side-mounted
Terminal box 750

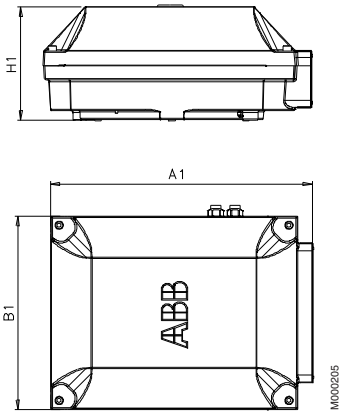

Motor sizes 450
Top-mounted
Terminal box 1200

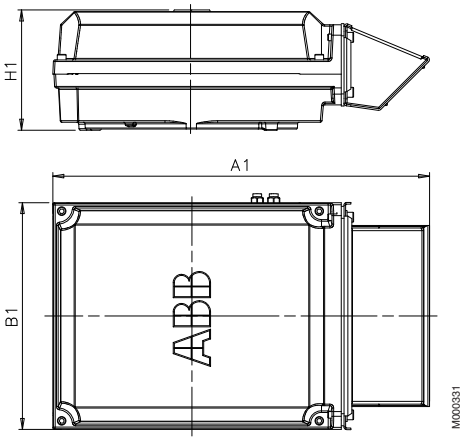

Motor size	Terminal box	A1	B1	H1
80-132		202	188	66
160-180		234	234	68
200-250		352	319	147
280-400	210	416	306	177
	370	451	347	200
	750 top-mounted	686	413	219
	750 side-mounted	525	413	219
	1200	1250	578	285
		1195	578	285
		1000	578	285

For motor dimensions please see dimension drawings on earlier pages or on our web-site www.abb.com/motors&generators.

Non-sparking motor construction

Typical exploded view of cast iron motors, frame size 315

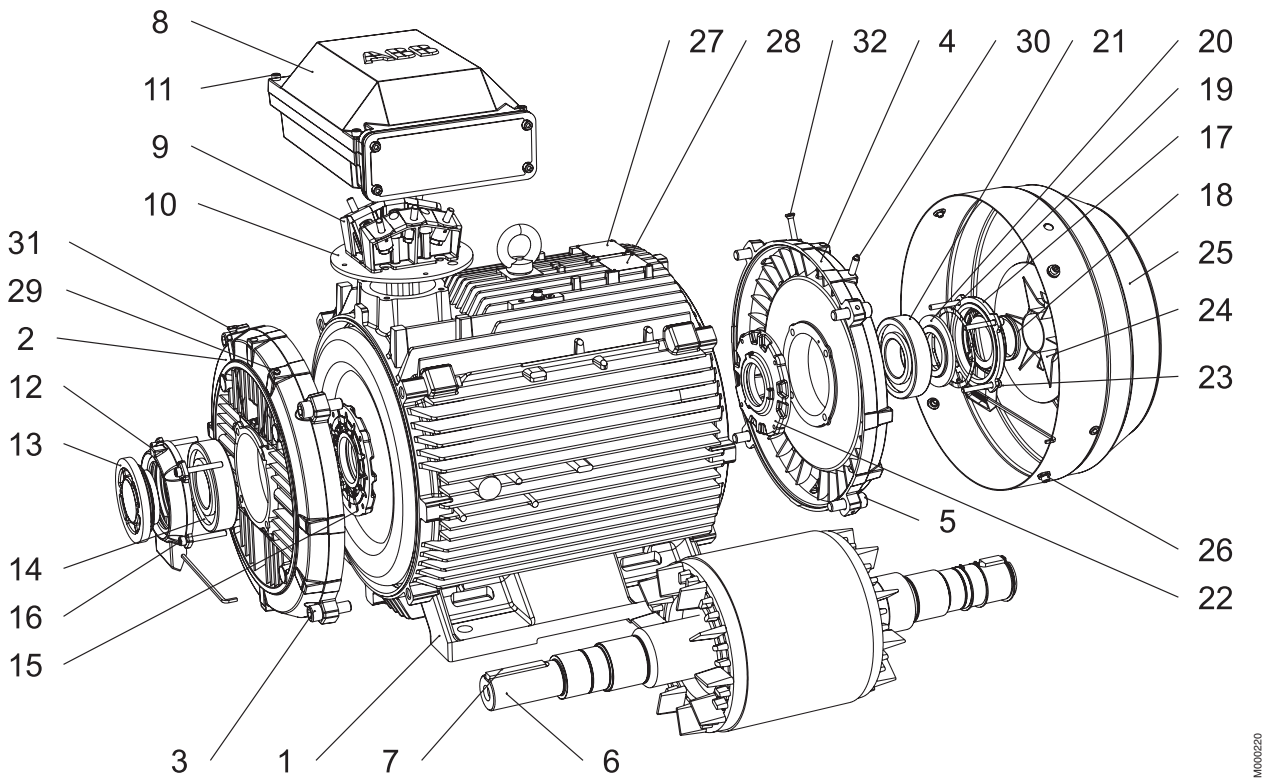

5

1	Stator frame	17	Outer bearing cover, N-end
2	Endshield, D-end	18	Seal, N-end
3	Screws for endshield, D-end	19	Wave spring
4	Endshield, N-end	20	Valve disc, N-end
5	Screws for endshield, N-end	21	Bearing, N-end
6	Rotor with shaft	22	Inner bearing cover, N-end
7	Key, D-end	23	Screws for bearing cover, N-end
8	Terminal box	24	Fan
9	Terminal board	25	Fan cover
10	Intermediate flange	26	Screws for fan cover
11	Screws for terminal box cover	27	Rating plate
12	Outer bearing cover, D-end	28	Regreasing plate
13	Valve disc with labyrinth seal, D-end; standard in 2-pole motors (V-ring in 4-8 pole)	29	Grease nipple, D-end
14	Bearing, D-end	30	Grease nipple, N-end
15	Inner bearing cover, D-end	31	SPM nipple, D-end
16	Screws for bearing cover, D-end	32	SPM nipple, N-end

Certificate examples

M000355

L C I E

MATERIEL ELECTRIQUE POUR ATMOSPHERES EXPLOSIVES

(1) **CERTIFICAT DE CONFORMITE**

(2) Référence du certificat **LCIE N° Ex 03.040**

(3) Ce certificat est délivré pour l'équipement électrique suivant, destiné à être utilisé en atmosphères explosives gazeuses.

. Moteur asynchrone

. Type certifié :

ELECTRICAL EQUIPMENT FOR EXPLOSIVE ATMOSPHERES

(1) **CERTIFICATE OF CONFORMITY**

(2) Certificate reference **LCIE N° Ex 03.040**

(3) This certificate is issued for the following electrical equipment, intended for use in gaseous explosive atmosphères.

. Asynchronous motor

. Type certified :
M3GP 400...

(4) Manufactured by : ABB Oy, Electrical Machines, LV Motors
P.O Box 633
Strombergin Puistotie 5
FIN 65100 VAASA FINLAND

(5) This electrical apparatus and any accepted variations thereof are specified in the annex and possible supplement(s) to this certificate and in the descriptive documents therein referred to.

(6) LCIE, as an approved certification body in accordance with article 14 of the European Communities Council Directive 76/117/EEC of December 18, 1975, and as a notified body in accordance with Article 9 of Directive 94/9/EC of the European Parliament and the Council,

- certifies that the electrical equipment has been found to comply with the IEC report 79-15 of 1987, IEC 61241-1-1 (1999) and IEC 60 079-15 (2001) and has successfully met the type verification and test requirements of this documents,
- confirms that a test report N°60018592/02 has been completed on these verifications and tests, one original copy of which has been kept by LCIE.

(7) The marking code of the electrical apparatus is :

Ex nA II T1, T2 or T3
T... °C DIP A21, A22 IP6X/5X

M000232

L C I E

ATTESTATION D'EXAMEN CE DE TYPE

2 **Appareil ou système de protection** destiné à être utilisé en atmosphères explosibles **(Directive 94/9/CE)**

3 Numéro de l'attestation d'examen CE de type
LCIE 06 ATEX 6088

4 Appareil ou système de protection :
Moteur asynchrone
Type : M3GP / M3LP 450...

5 Demandeur : ABB Oy Motors
Adresse : Strömbergin Puistotie 5A
65100 Vaasa Finland

6 Fabricant : ABB Oy Motors
Adresse : Strömbergin Puistotie 5A
65100 Vaasa Finland

7 Cet appareil ou système de protection et ses variantes éventuelles acceptées sont décrits dans l'annexe de la présente attestation et dans les documents descriptifs cités en référence.

8 Le LCIE, organisme notifié sous la référence 0081 conformément à l'article 9 de la directive 94/9/CE du Parlement européen et du Conseil du 23 mars 1994, certifie que cet appareil ou système de protection est conforme aux exigences essentielles de sécurité et de santé pour la conception et la construction d'appareils et de systèmes de protection destinés à être utilisés en atmosphères explosibles, données dans l'annexe II de la directive.
Les résultats des vérifications et essais figurent dans le rapport confidentiel N° 60048298-548565.

9 Le respect des exigences essentielles de sécurité et de santé est assuré par la conformité à :
- EN 60079-0 (2004) - prEN 61241-0 (2005)
- EN 60079-15 (2005) - EN 61241-1 (2004)

10 Le signe X lorsqu'il est placé à la suite du numéro de l'attestation, indique que cet appareil ou système de protection est soumis aux conditions spéciales pour une utilisation sûre, mentionnées dans l'annexe de la présente attestation.

11 Cette attestation d'examen CE de type concerne uniquement la conception et la construction de l'appareil ou du système de protection spécifié, conformément à l'annexe III de la directive 94/9/CE.
Des exigences supplémentaires de la directive sont applicables pour la fabrication et la fourniture de l'appareil ou du système de protection. Ces dernières ne sont pas couvertes par la présente attestation.

12 Le marquage de l'appareil ou du système de protection doit comporter les informations détaillées au point 15.

Fontenay-aux-Roses, le 3 octobre 2006

EC TYPE EXAMINATION CERTIFICATE

2 **Equipment or protective system** intended for use in potentially explosive atmospheres **(Directive 94/9/EC)**

3 EC type examination certificate number
LCIE 06 ATEX 6088

4 Equipment or protective system :
Asynchronous motor
Type : M3GP / M3LP 450...

5 Applicant : ABB Oy Motors
Address : Strömbergin Puistotie 5A
65100 Vaasa Finland

6 Manufacturer : ABB Oy Motors
Address : Strömbergin Puistotie 5A
65100 Vaasa Finland

7 This equipment or protective system and any acceptable variation thereto is specified in the schedule to this certificate and the documents therein referred to.

8 LCIE, notified body number 0081 in accordance with article 9 of the Directive 94/9/EC of the European Parliament and the Council of 23 March 1994, certifies that this equipment or protective system has been found to comply with the essential Health and Safety Requirements relating to the design and construction of equipment and protective systems intended for use in potentially explosive atmospheres, given in Annex II to the Directive.
The examination and test results are recorded in confidential report N° 60048298-548565.

9 Compliance with the Essential Health and Safety Requirements has been assured by compliance with :
- EN 60079-0 (2004) - prEN 61241-0 (2005)
- EN 60079-15 (2005) - EN 61241-1 (2004)

10 If the sign X is placed after the certificate number, it indicates that the equipment or protective system is subject to special conditions for safe use specified in the schedule to this certificate.

11 This EC type examination certificate relates only to the design and construction of this specified equipment or protective system in accordance with annex III to the directive 94/9/EC.
Further requirements of the directive apply to the manufacturing process and supply of this equipment or protective system. These are not covered by this certificate.

12 The marking of the equipment or protective system shall include informations as detailed at 15.

Responsable de certification ATEX
ATEX certification manager

Seul le texte en français peut engager la responsabilité du LCIE. Ce document ne peut être reproduit en intégralité, sans aucune modification
The LCIE's liability applies only on the French text. This document may be reproduced in its entirety, without any change

Page 1 sur 3
03-Annexe III_typ_app - rev0.DOC

ABB

EC Declaration of Conformity

ABB Oy
Motors
P.O. Box 633
Strömbergin puistotie 5A
FIN - 65101 Vaasa, Finland

3-phase induction motors, series M2BA, M2GP, M3JP, M3KP, M3GP, M3HP and M3LP; as listed on page 2 in this document, are in conformity with provisions of the following Council Directive:

EX of 23 March 1994).

ies the motors are in conformity with provisions of the following harmonized

79-1 (2004), EN 60079-7 (2003), EN 60079-15 (2005), EN 61241-0 (2006), EN

isions of above standards do not effect the construction of the listed motors, which al Health and Safety Requirements in Annex II of said directive.

s for converter supply applications additional requirements must be respected as the installation, as described in the dedicated addendum joined hereafter.

Signed by ----------
Jouni Ikäheimo

Title Product Development Manager

Date February 16th, 2007

ABB Oy

Motors	Visiting Address	Telephone	Internet	Business Identity Code:
Postal address	Strömbergin Puistotie 5 A	+358 10 22 11	www.abb.fi	0763403-0
P.O. Box 633	FI-65320 Vaasa	Telefax	e-mail:	Domicile: Helsinki
FI-65101 Vaasa	FINLAND	+358 10 22 47372	first name.last name	
FINLAND			@fi.abb.com	

M000209

5

Process performance Non-sparking motors with cast iron frame in brief, basic design

Motor size		80	90	100	112	132	160	180
Stator	Material	Cast iron EN-GJL-200						
	Paint colour shade	Blue, Munsell 8B 4.5/3.25 / NCS 4822 B05G						
	Paint	Two-pack epoxy paint, thickness > 80 µm.						
Bearing end shields	Material	Cast iron EN-GJL-150					Cast iron EN-GJL-200	
	Paint colour shade	Blue, Munsell 8B 4.5/3.25 / NCS 4822 B05G						
	Paint	Two-pack epoxy paint, thickness > 80 µm.						
Bearings	D-end 2-pole	6205-2Z/C3	6205-2Z/C3	6206-2Z/C3	6206-2Z/C3	6208-2Z/C3	6309/C3	6310/C3
	4-8 pole							
	N-end 2-pole	6205-2Z/C3	6205-2Z/C3	6206-2Z/C3	6206-2Z/C3	6208-2Z/C3	6309/C3	6309/C3
	4-8 pole							
Axially locked bearings	Inner bearing cover	As standard, locked at D-end						
Bearing seal		Gamma-ring as std, radial seal on request						
Lubrication		Permanent grease lubrication.					Regreasable bearings as std, lifetime lubrication as option	
SPM-nipples		–					As standard	
Rating plate	Material	Stainless steel 0.80 Cr 18 Ni9					Stainless steel	
Terminal box	Frame material	Cast iron EN-GJL-150					Cast iron EN-GJL-200	
	Cover material	Cast ironEN-GJL-150					Cast iron EN-GJL-200	
	Screws	Steel 5G, coated with zinc and yellow chromated						
Connections	Cable entries	2xM25x1.5		2xM32x1.5			2xM40x1.5	
	Terminals	6 terminals for connection with cable lugs (not included)						
Fan	Material	Reinforced glass fiber laminate or aluminum						
Fan cover	Material	Steel					Zinc coated steel	
	Paint colour shade	Blue, Munsell 8B 4.5/3.25 / NCS 4822 B05G						
	Paint	Two-pack epoxy paint, thickness > 80 µm.						
Stator winding	Material	Copper						
	Insulation	Insulation class F						
	Winding protection	3 pcs thermistors						
Rotor winding	Material	Pressure die-cast aluminum						
Balancing method		Half key balancing						
Key ways		Open key way					Closed key-way	
Heating elements	Optional	25 W					25 W	50 W
Drain holes		Optional					As standard, open on delivery	
External earthing bolt		As standard						
Enclosure		IP 55, higher protection on request						
Cooling method		IC 411						

Process performance Non-sparking motors with cast iron frame in brief, basic design

Motor size		200	225	250	280	315	355	400	450
Stator	Material	Cast iron EN-GJL-200 / GG 20 / GRS 200							
	Paint colour shade	Blue, Munsell 8B 4.5/3.25 / NCS 4822 B05G							
	Paint	Two-pack epoxy paint, thickness > 80 µm.							
Bearing end shields	Material	Cast iron EN-GJL-200 / GG 20 / GRS 200			Cast iron EN-GJL-200/GG20/GRS 200, EN-GJL-250/ GG25/GRS 250, EN-GJS-400/GG40/GRS 400				
	Paint colour shade	Blue, Munsell 8B 4.5/3.25 / NCS 4822 B05G							
	Paint	Two-pack epoxy paint, thickness > 80 µm.							
Bearings	D-end 2-pole	6312/C3	6313/C3	6315/C3	6316/C3	6316/C3	6316M/C3	6317/C3	6317/C3
	4-8 pole	6312/C3	6313/C3	6315/C3	6316/C3	6319/C3	6322/C3	6324/C3	6324/C3
	N-end 2-pole	6310/C3	6312/C3	6313/C3	6316/C3	6319/C3	6316M/C3	6317/C3	6317/C3
	4-8 pole	6310/C3	6312/C3	6313/C3	6316/C3	6316/C3	6316/C3	6319/C3	6319/C3
Axially locked bearings	Inner bearing cover	As standard, locked at D-end							
Bearing seal		Gamma-ring as standard, radial seal on request			V-ring as standard, radial seal on request				
Lubrication		Regreasable bearings as standard, lifetime lubrication as option			Regreasable bearings, regreasing nipples, M10x1				
SPM-nipples		As standard			Optional		As standard		
Rating plate	Material	Stainless steel							
Terminal box	Frame material	Cast iron EN-GJL-200/GG 20/GRS 200			Cast iron EN-GJL-150 /GG15 / GRS 150				
	Cover material	Cast iron EN-GJL-200/GG 20/GRS 200			Cast iron EN-GJL-150 /GG15 / GRS 150				
	Cover screws material	Steel 5G, coated with zinc and yellow chromated							
Connections	Cable entries	2xM50x1.5			2xM63x1.5		2xØ60/80 2xØ60	2xØ80 2xØ60/80	2xØ80 2xØ60/80
	Terminals	6 terminals for connection with cable lugs (not included)							
Fan	Material	Reinforced glass fiber laminate or aluminum			Reinforced glass fiber, aluminum or polypropylene with metal hub				
Fan cover	Material	Zinc coated steel			Steel				
	Paint colour shade	Blue, Munsell 8B 4.5/3.25 / NCS 4822 B05G							
	Paint	Two-pack polyester paint, thickness > 80 µm			Two-pack epoxy polyester paint, thickness > 80 µm.				
Stator winding	Material	Copper							
	Insulation	Insulation class F							
	Winding protection	3 pcs thermistors							
Rotor winding	Material	Pressure die-cast aluminum			Pressure die-cast aluminum or copper				
Balancing method		Half key balancing							
Key ways		Closed key way			Open key way				
Heating elements	Optional	50 W				2 x 50 W	2 x 65 W		
Drain holes		As standard, open on delivery							
External earthing bolt		As standard							
Enclosure		IP 55, higher protection on request							
Cooling method		IC 411							

5

5

General purpose
Non-sparking motors Ex nA

Totally enclosed squirrel cage three phase low voltage motors, Sizes 71 - 280, 0.25 to 75 kW

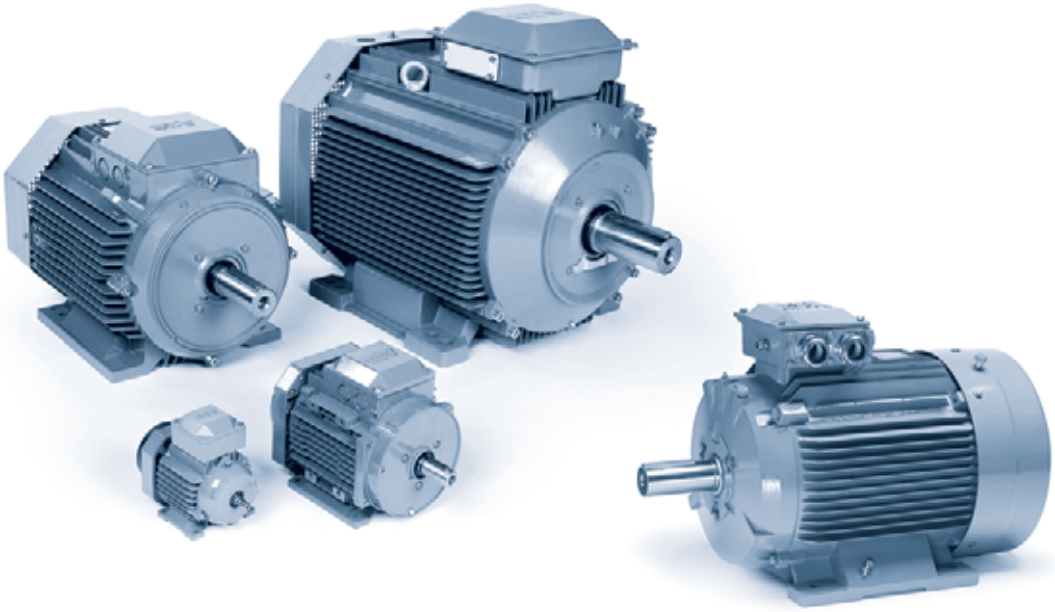

www.abb.com/motors&generators

> Motors

>> Motors and Generators for Hazardous Areas

6

Mechanical design.....120

Ordering information.....113

Technical data.....114

Rating plates.....119

Variant codes.....120

Dimension drawings.....125

Non-sparking motors in brief.....128

Mechanical design

Terminal boxes

Terminal boxes are mounted on the top of the basic motor versions. The terminal box is either rotatable or at least allows cable entry from either side which gives a choice of connection possibilities.

Protection class of the standard terminal box is IP 55.

Aluminum motors
In sizes 90 to 180 the terminal box is made of aluminum, the bottom section is integrated with the stator and provided with two openings on both sides. Cable glands are not supplied.

In sizes 200 to 280 the terminal box and cover are made of deep drawn steel, bolted to the stator. The terminal box is provided with two flange openings, one on each side. Cable glands are not supplied.

Cast iron motors
The terminal boxes are 4x90° turnable as standard.

Motors are as standard fitted with metric threads. Cable glands are not supplied.

Co-ordination of terminal boxes and cable entries

If no ordering information on the cable is given, it is assumed to be p.v.c. -insulated and termination parts are supplied according to the following tables.

Aluminum motors sizes 90-180 and all cast iron motors sizes are as standard fitted with metric threads.

Motor sizes 90-280 with aluminum frame

Motor size	Opening	Metric cable entry	Cable diameter mm, min-max	Max.connection cable area mm²	Terminal bolt size	Terminal screw size
90-100	Knockout opening	2x(2xM25+M20)	2x(2xD11-16)	6		M4
112-132	Knockout opening	2x(M25+M20)	2x(D11-16+D9-13)	10	M5	
160-180	Knockout opening	2x(2xM40+M16)	2x(2xD19-27+D5-9)	35	M6	
200 [1]	Knockout opening	1x(2xM40+M16)	1x(2xD19-27+D5-9)	35	M6	
200-250 [2]	2 x FL 13	1x(2xM40+M16)	1x(2xD32-42+D5-9)	70	M10	
280	2 x FL 21	1x(2xM63+M16)	1x(2xD32-42+D5-9)	70	M10	

[1] M2AA
[2] M2AA 200 excluded

Motor sizes 71-250 with cast iron frame

Motor size	**Main cable entries**			Max. supply cable area mm²	Terminal bolt size 6 x	**Auxiliary cable entries** (heaters, thermistors etc.)		
	Thread	Metal plug	Outer cable sheath, mm			Thread	Metal plug	Outer cable sheath, mm
71	1 x M20 x 1.5	1 x M20 x 1.5	10 - 14	4	M4	1 x M16 x 1.5	1 x M16 x 1.5	6 - 10
80 - 90	1 x M25 x 1.5	1 x M25 x 1.5	14 - 18	4	M4	1 x M16 x 1.5	1 x M16 x 1.5	6 - 10
100 - 112	1 x M32 x 1.5	1 x M32 x 1.5	20 - 25	6	M5	1 x M16 x 1.5	1 x M16 x 1.5	6 - 10
132	1 x M32 x 1.5	1 x M32 x 1.5	20 - 25	6	M5	1 x M16 x 1.5	1 x M16 x 1.5	6 - 10
160 - 180	2 x M40 x 1.5	2 x M40 x 1.5	22 - 32	25	M6	2 x M16 x 1.5	2 x M16 x 1.5	6 - 10
200 - 225	2 x M50 x 1.5	2 x M50 x 1.5	32 - 38	70	M8	2 x M16 x 1.5	2 x M16 x 1.5	6 - 10
250	2 x M63 x 1.5	2 x M63 x 1.5	37 - 44	150	M10	2 x M16 x 1.5	2 x M16 x 1.5	6 - 10

Ordering information

Sample order

When placing an order, please state the following minimum data in the order, as in example.

The product code of the motor is composed in accordance with the following example.

Motor type	M3AA 250 SMA
Pole number	2
Mounting arrangement (IM code)	IM B3 (IM 1001)
Rated output	55 kW
Product code	3GAA251001-ADC
Variant codes if needed	

Motor size

A	B	C	D, E, F, G
M3AA	250 SMA	3GAA 251 001-	A D C 003 etc.

1 2 3 4 5 6 7 8 9 10 11 12 13 14

A Motor type
B Motor size
C Product code
- **D** Mounting arrangement code
- **E** Voltage and frequency code
- **F** Generation code

G Variant codes

Explanation of the product code:

Positions 1 to 4
3GAA = Totally enclosed fan cooled squirrel cage motor with aluminum frame, non-sparking
3GGP = Totally enclosed fan cooled squirrel cage motor with cast iron frame, non-sparking

Positions 5 and 6
IEC-frame

07	= 71	**16**	= 160
08	= 80	**18**	= 180
09	= 90	**20**	= 200
10	= 100	**22**	= 225
11	= 112	**25**	= 250
13	= 132	**28**	= 280

Position 7
Speed (Pole pairs)
1 = 2 poles
2 = 4 poles
3 = 6 poles
4 = 8 poles
5 = 10 poles

Position 8 to 10
Serial number

Position 11
- (dash)

Position 12
Mounting arrangement
A = Foot-mounted, top-mounted terminal box
R = Foot-mounted, terminal box RHS seen from D-end
L = Foot-mounted, terminal box LHS seen from D-end
B = Flange-mounted, large flange
C = Flange-mounted, small flange (sizes 71 to 112)
H = Foot- and flange-mounted, terminal box top-mounted
J = Foot- and flange-mounted, small flange with tapped holes
S = Foot- and flange-mounted, terminal box RHS seen from D-end
T = Foot- and flange-mounted, terminal box LHS seen from D-end
V = Flange-mounted, special flange
F = Foot- and flange-mounted. Special flange

Position 13
Voltage and frequency code
See table below

Position 14
Generation code
A, B, C...

The product code must be, if needed, followed by variant codes.

6

Code letters for supplementing the product code - aluminum motors

Motor size	Code letter for voltage and frequency Direct start or, with Δ-connection, also Y/Δ-start S 50 Hz	60 Hz	D 50 Hz	60 Hz	H 50 Hz	E 50 Hz	F 50 Hz	T 50 Hz	U 50 Hz	X
56-100	220-240 VΔ 380-420 VY	440-480 VY	380-420 VΔ 660-690 VY	440-480 VΔ -	-	500 VΔ[1)]	500 VY	660 VΔ[1)]	690 VΔ[1)]	Other rated voltage, connection or frequency, 690 V maximum
112-132	220-240 VΔ 380-420 VY	- 440-480 VY	380-420 VΔ 660-690 VY	440-480 VΔ -	415 VΔ	500 VΔ	500 VY	660 VΔ	690 VΔ	
M2AA 160-250	230 VΔ 400 VY	- -	400 VΔ 690 VY	- -	-	500VΔ	-	-	-	
M3AA 160-280	220, 230 VΔ 380,400,415 VY	- 440 VY	380,400,415VΔ 660, 690 VY	440 VΔ -	415 VΔ	500 VΔ	500 VY	660 VΔ	690 VΔ	

[1)] On request.
Note: By Frame sizes 90-100 max. 500 V.

Code letters for supplementing the product code - cast iron motors

Motor size	Code letter for voltage and frequency Direct start or, with Δ-connection, also Y/Δ-start S 50Hz	60 Hz	D 50 Hz	60 Hz
71-132	220-240 VΔ 380-420 VY	440-480 VY -	380-420 VΔ 660-690 VY	440-480VΔ -
160-250	220, 230 VΔ 380,400,415VY	- 440VY	380, 400, 415 VΔ 660, 690 VY	440VΔ -

General purpose Non-sparking motors Ex nA

Technical data for totally enclosed squirrel cage three phase aluminum motors

ATEX Certified

M000194

IP 55, IC 411; Insulation class F, temperature rise class B

Output kW 50 Hz	60 Hz	Motor type		Product code	Speed r/min	Efficiency FL 100%	Efficiency FL 75%	Power factor cos φ	Current I_N A	Current I_s/I_N	Torque T_N Nm	Torque T_s/T_N	Torque T_{max}/T_N	Moment of inertia J=1/4GD²	Weight kg	Sound pressure level L_p dB(A)
3000 r/min = 2 poles					**400 V 50 Hz**						**Basic design**					
1.5	**1.75**	**M3AAN**	**90 S**	3GAA 091 001-••E	2870	80.1	76.2	0.82	3.35	5.5	5	2.4	3.0	0.0019	13	63
2.2	**2.5**	**M3AAN**	**90 L**	3GAA 091 002-••E	2880	83.6	79.0	0.87	4.37	7.0	7.5	2.7	3.0	0.0024	16	63
3	**3.5**	**M3AAN**	**100 L**	3GAA 101 001-••E	2900	86.0	84.1	0.88	5.95	7.5	10	2.7	3.6	0.0041	21	65
4	**4.6**	**M3AAN**	**112 M**	3GAA 111 001-••B	2850	86.0	86.2	0.91	7.4	7.5	13.4	2.8	3.0	0.01	25	63
5.5	**6.4**	**M3AAN**	**132 SA**	3GAA 131 001-••B	2855	86.0	86.6	0.88	10.5	7.8	18.4	3.2	3.4	0.014	37	75
7.5	**8.6**	**M3AAN**	**132 SB**	3GAA 131 002-••B	2860	88.0	86.2	0.89	13.9	8.5	25.1	3.4	3.6	0.016	42	73
11	**13**	**M2AA**	**160 MA**	3GAA 161 111-••A	2915	88.4	88.9	0.89	20.5	6.1	36	2.1	2.5	0.039	73	73
11	**12.5**	**M3AA**	**160 MA**	3GAA 161 101-••C	2930	91.0	91.2	0.88	20	6.2	36	2.1	2.8	0.039	73	69
15	**17.5**	**M2AA**	**160 M**	3GAA 161 112-••A	2900	89.5	89.9	0.90	27	6.1	49.4	2.4	2.6	0.047	84	75
15	**17.5**	**M3AA**	**160 M**	3GAA 161 102-••C	2920	91.3	91.7	0.90	26.5	6.4	49	2.3	2.7	0.047	84	69
18.5	**21**	**M2AA**	**160 L**	3GAA 161 113-••A	2915	90.2	90.5	0.91	32.5	6.8	60	2.6	3.0	0.053	94	73
18.5	**21**	**M3AA**	**160 L**	3GAA 161 103-••C	2920	92.4	93.1	0.91	32	7.2	61	2.6	2.9	0.053	94	69
22	**25.5**	**M2AA**	**180 M**	3GAA 181 111-••A	2925	91.2	91.3	0.89	39	7.9	72	2.8	3.2	0.06	108	75
22	**25**	**M3AA**	**180 M**	3GAA 181 101-••C	2930	92.8	93.3	0.89	38.5	7.2	71	2.7	3.0	0.077	119	69
30	**35**	**M2AA**	**200 LA**	3GAA 201 011-••A	2945	92.0	92.0	0.88	53	7.9	97	3.0	3.7	0.094	139	75
30	**35**	**M3AA**	**200 MLA**	3GAA 201 001-••C	2955	93.2	93.2	0.88	53	8.5	97	2.9	3.1	0.15	175	72
37	**42**	**M2AA**	**200 L**	3GAA 201 012-••A	2945	92.8	92.9	0.89	65	8.2	120	3.1	3.6	0.115	170	75
37	**43**	**M3AA**	**200 MLB**	3GAA 201 002-••C	2950	93.6	93.7	0.89	64	7.2	120	2.3	2.9	0.18	200	72
45	**52**	**M2AA**	**225 M**	3GAA 221 011-••A	2940	93.0	93.0	0.88	80	7.7	146	2.8	3.0	0.21	209	75
45	**52**	**M3AA**	**225 SMB**	3GAA 221 001-••C	2960	94.1	93.9	0.88	79	7.7	145	2.5	2.9	0.26	235	74
55	**63**	**M2AA**	**250 M**	3GAA 251 011-••A	2960	93.5	93.8	0.90	95	7.3	177	2.8	3.0	0.31	277	74
55	**63**	**M3AA**	**250 SMA**	3GAA 251 001-••C	2970	94.2	93.8	0.89	95	7.9	177	2.4	3.0	0.49	285	75
75	**86**	**M3AA**	**280 SMA**	3GAA 281 001-••C	2970	94.7	94.4	0.90	127	8.2	241	2.7	3.2	0.57	375	75
3000 r/min = 2-poles					**400 V 50 Hz**						**High-output design**					
2.7	**3** [1]	**M3AAN**	**90 LB**	3GAA 091 003-••E	2860	80.7	83.5	0.86	5.7	7.0	9	2.6	3.0	0.0027	18	63
4	**4.6** [1]	**M3AAN**	**100 LB**	3GAA 101 002-••E	2900	85.0	84.3	0.86	8.1	7.5	13	2.7	3.6	0.005	25	68
5.5	**6.4** [1]	**M3AAN**	**112 MB**	3GAA 111 002-••B	2855	86.5	87.1	0.93	9.9	7.3	18.4	2.7	2.9	0.012	33	66
9.2	**10.6** [1]	**M3AAN**	**132 SBB**	3GAA 131 004-••B	2825	86.0	88.2	0.93	16.6	7.3	31.1	3.2	3.5	0.022	57	74
11	**12.6** [1]	**M3AAN**	**132 SC**	3GAA 131 003-••B	2835	87.0	87.4	0.93	19.6	8.0	37	3.2	3.3	0.022	57	73
45	**52**	**M3AA**	**200 MLC**	3GAA 201 003-••C	2950	94.1	94.5	0.89	78	8.2	146	3.0	3.2	0.19	205	72
55	**63**	**M3AA**	**225 SMC**	3GAA 221 002-••C	2960	94.5	94.6	0.89	95	7.3	177	2.8	3.0	0.29	260	74
75	**86**	**M3AA**	**250 SMB**	3GAA 251 002-••C	2970	94.7	94.4	0.90	127	8.2	241	2.7	3.2	0.57	330	75

[1] Temperature rise class F.

Note: When ordering, following variant codes should be added;
Frame sizes 90-100: 094 Ex n design.
Frame sizes 112-280: 480 Ex nA, fulfilling EN 50021
456 Ex nA design, fulfilling IEC 60079-15, with certificate.

The two bullets in the product code indicate choice of mounting arrangement, voltage and frequency (see ordering information)

General purpose Non-sparking motors Ex nA

Technical data for totally enclosed squirrel cage three phase aluminum motors

ATEX Certified

IP 55, IC 411; Insulation class F, temperature rise class B

Output kW 50 Hz	Output kW 60 Hz		Motor type		Product code	Speed r/min	Efficiency FL 100%	Efficiency FL 75%	Power factor cos φ	Current I_N A	Current I_s/I_N	Torque T_N Nm	Torque T_s/T_N	Torque T_{max}/T_N	Moment of inertia J=1/4GD²	Weight kg	Sound pressure level L_p dB(A)
1500 r/min = 4-poles						**400 V 50 Hz**						**Basic design**					
1.1	**1.3**		**M3AAN**	**90 S**	3GAA 092 001-••E	1410	77.5	76.4	0.81	2.59	5.0	7.5	2.2	2.7	0.0032	13	50
1.5	**1.75**		**M3AAN**	**90 L**	3GAA 092 002-••E	1420	80.3	78.1	0.79	3.45	5.0	10	2.4	2.9	0.0043	16	50
2.2	**2.5**		**M3AAN**	**100 LA**	3GAA 102 001-••E	1430	83.0	82.7	0.81	4.8	5.5	15	2.4	2.9	0.0069	21	64
3	**3.5**		**M3AAN**	**100 LB**	3GAA 102 002-••E	1430	85.0	83.9	0.81	6.48	5.5	20	2.5	2.9	0.0082	24	66
4	**4.6**		**M3AAN**	**112 M**	3GAA 112 001-••B	1435	84.5	83.9	0.80	8.6	7.0	26.6	2.9	3.1	0.015	27	60
5.5	**6.4**		**M3AAN**	**132 S**	3GAA 132 001-••B	1450	87.0	87.7	0.83	11.1	7.3	36.2	2.2	3.0	0.031	40	66
7.5	**8.6**		**M3AAN**	**132 M**	3GAA 132 002-••B	1450	88.0	88.6	0.83	14.8	7.9	49.4	2.5	3.2	0.038	48	66
11	**13**		**M2AA**	**160 M**	3GAA 162 111-••A	1460	89.1	89.8	0.81	22	6.5	72	2.7	2.6	0.067	75	62
11	**12.5**		**M3AA**	**160 M**	3GAA 162 101-••C	1460	92.0	92.7	0.81	21.5	7.8	72	3.3	3.2	0.067	75	62
15	**17.5**		**M2AA**	**160 L**	3GAA 162 112-••A	1460	90.4	91.0	0.82	29	7.1	98	2.7	3.3	0.088	92	62
15	**18**		**M3AA**	**160 L**	3GAA 162 102-••C	1460	91.8	92.5	0.82	29	8.1	98	3.0	3.6	0.091	94	62
18.5	**21**		**M2AA**	**180 M**	3GAA 182 111-••A	1460	91.1	91.5	0.81	36.5	7.6	121	3.1	3.5	0.102	110	64
18.5	**22**		**M3AA**	**180 M**	3GAA 182 101-••C	1470	92.3	92.9	0.84	35	7.0	120	2.9	2.9	0.161	124	62
22	**25.5**		**M2AA**	**180 L**	3GAA 182 112-••A	1460	91.8	92.3	0.82	42	7.9	143	3.0	3.8	0.127	128	64
22	**26**		**M3AA**	**180 L**	3GAA 182 102-••C	1470	93.1	93.9	0.85	40	7.1	143	3.1	3.3	0.191	141	63
30	**35**		**M2AA**	**200 L**	3GAA 202 011-••A	1470	92.0	92.1	0.80	59	7.8	195	3.0	3.4	0.225	177	67
30	**35**		**M3AA**	**200 MLB**	3GAA 202 001-••C	1475	93.4	94.0	0.84	55	7.5	194	2.5	2.8	0.29	180	63
37	**43**		**M2AA**	**225 S**	3GAA 222 011-••A	1475	92.8	93.0	0.85	68	6.8	240	3.0	3.1	0.35	216	68
37	**42**		**M3AA**	**225 SMA**	3GAA 222 001-••C	1480	93.6	93.8	0.84	68	7.6	239	3.1	3.3	0.37	215	66
45	**52**		**M2AA**	**225 M**	3GAA 222 012-••A	1475	93.0	93.1	0.84	84	8.1	291	3.5	3.2	0.41	237	68
45	**52**		**M3AA**	**225 SMB**	3GAA 222 002-••C	1480	94.2	94.4	0.83	83	7.6	291	2.8	3.0	0.42	230	66
55	**63**		**M2AA**	**250 M**	3GAA 252 011-••A	1475	93.7	94.3	0.84	98	6.8	356	2.5	2.6	0.5	286	66
55	**63**		**M3AA**	**250 SMA**	3GAA 252 001-••C	1480	94.6	94.9	0.86	98	7.6	355	3.1	3.0	0.72	275	67
72	**80**		**M3AA**	**280 SMA**	3GAA 282 001-••C	1475	94.6	95.0	0.88	126	7.4	466	3.2	3.1	0.88	380	67
1500 r/min = 4-poles						**400 V 50 Hz**						**High-output design**					
1.85	**2.2**	[1]	**M3AAN**	**90 L**	3GAA 092 003-••E	1390	79.5	78.1	0.80	4.4	4.5	13	2.2	2.4	0.0043	16	50
2.2	**2.5**	[1]	**M3AAN**	**90 LB**	3GAA 092 004-••E	1390	80.3	81.0	0.83	4.85	4.5	15	2.2	2.4	0.0048	17	50
4	**4.6**	[1]	**M3AAN**	**100 LC**	3GAA 102 003-••E	1420	81.0	81.7	0.82	8.65	5.5	27	2.5	2.8	0.009	25	60
5.5	**6.4**	[1]	**M3AAN**	**112 MB**	3GAA 112 002-••B	1425	84.5	83.5	0.83	11.4	7.1	36.9	2.8	3.1	0.018	34	60
9.2	**10.6**	[1]	**M3AAN**	**132 MBA**	3GAA 132 004-••B	1450	88.0	88.6	0.85	17.8	7.3	60	2.0	2.8	0.048	59	63
11	**12.6**	[1]	**M3AAN**	**132 MB**	3GAA 132 003-••B	1450	88.0	89.4	0.86	21	8.3	72	2.5	2.7	0.048	59	66
55	**63**		**M3AA**	**225 SMC**	3GAA 222 003-••C	1480	94.6	95.0	0.84	100	7.5	356	3.5	3.0	0.49	265	66
72	**80**		**M3AA**	**250 SMB**	3GAA 252 002-••C	1475	94.6	95.0	0.88	126	7.4	466	3.2	3.1	0.88	335	67

[1] Temperature rise class F.

Note: When ordering, following variant codes should be added;
Frame sizes 90-100: 094 Ex n design.
Frame sizes 112-280: 480 Ex nA, fulfilling EN 50021
456 Ex nA design, fulfilling IEC 60079-15, with certificate.

The two bullets in the product code indicate choice of mounting arrangement, voltage and frequency (see ordering information)

General purpose Non-sparking motors Ex nA

Technical data for totally enclosed squirrel cage three phase aluminum motors

ATEX Certified

IP 55, IC 411; Insulation class F, temperature rise class B

Output kW 50 Hz	Output kW 60 Hz		Motor type		Product code	Speed r/min	Efficiency FL 100%	Efficiency FL 75%	Power factor cos φ	Current I_N A	Current I_s/I_N	Torque T_N Nm	Torque T_s/T_N	Torque T_{max}/T_N	Moment of inertia J=1/4GD²	Weight kg	Sound pressure level L_p dB(A)
1000 r/min = 6-poles						**400 V 50 Hz**									**Basic design**		
0.75	**0.9**		**M3AAN**	**90 S**	3GAA 093 001-••E	930	71.5	70.7	0.67	2.36	4.0	7.5	1.9	2.3	0.0032	13	44
1.1	**1.3**		**M3AAN**	**90 L**	3GAA 093 002-••E	930	74.4	72.5	0.69	3.25	4.0	11	2.1	2.4	0.0043	16	44
1.5	**1.75**		**M3AAN**	**100 L**	3GAA 103 001-••E	950	80.0	77.0	0.71	3.92	4.5	15	1.9	2.3	0.0082	23	49
2.2	**2.5**		**M3AAN**	**112 M**	3GAA 113 001-••B	940	80.5	79.3	0.74	5.4	5.6	22.3	2.1	2.7	0.015	27	66
3	**3.5**		**M3AAN**	**132 S**	3GAA 133 001-••B	960	84.5	82.7	0.75	6.9	6.1	29.8	2.0	2.6	0.031	39	57
4	**4.6**		**M3AAN**	**132 MA**	3GAA 133 002-••B	960	85.5	83.1	0.78	8.7	7.1	39.7	2.0	2.8	0.038	46	61
5.5	**6.4**		**M3AAN**	**132 MB**	3GAA 133 003-••B	955	86.0	85.0	0.78	11.9	6.9	55	2.2	2.8	0.045	54	57
7.5	**8.6**		**M3AA**	**160 M**	3GAA 163 101-••C	970	89.3	90.4	0.79	15.4	6.6	74	1.9	2.6	0.089	88	59
11	**12.5**		**M3AA**	**160 L**	3GAA 163 102-••C	970	89.8	90.5	0.78	23	6.9	109	2.1	3.4	0.107	102	59
15	**17**		**M3AA**	**180 L**	3GAA 183 101-••C	970	90.8	91.5	0.78	31	6.8	147	2.0	3.3	0.217	151	59
18.5	**21**		**M3AA**	**200 MLA**	3GAA 203 001-••C	985	91.1	91.7	0.81	36	7.0	180	2.7	2.5	0.37	165	63
22	**25**		**M3AA**	**200 MLB**	3GAA 203 002-••C	980	91.7	92.2	0.81	43	6.8	214	2.9	3.0	0.43	185	63
30	**34**		**M3AA**	**225 SMB**	3GAA 223 001-••C	985	92.8	93.0	0.83	56	7.4	290	3.2	2.8	0.64	225	63
37	**42**		**M3AA**	**250 SMA**	3GAA 253 001-••C	985	93.4	93.7	0.83	69	7.2	358	3.2	2.9	1.16	280	63
45	**52**	1)	**M3AA**	**280 SMA**	3GAA 283 001-••C	985	93.4	93.7	0.84	83	7.2	436	3.2	2.8	1.49	375	63
1000 r/min = 6-poles						**400 V 50 Hz**									**High-output design**		
1.3	**1.5**	1)	**M3AAN**	**90 LB**	3GAA 093 003-••E	910	69.0	69.0	0.71	3.85	4.0	13.5	1.9	2.2	0.0048	18	44
2.2	**2.5**	1)	**M3AAN**	**100 LC**	3GAA 103 002-••E	940	77.0	72.8	0.71	5.9	4.5	22	1.9	2.3	0.009	26	49
3	**3.5**	1)	**M3AAN**	**112 MB**	3GAA 113 002-••B	935	80.0	79.9	0.76	7.2	5.5	30.6	2.0	2.7	0.018	33	55
37	**42**		**M3AA**	**225 SMC**	3GAA 223 002-••C	985	93.0	93.6	0.83	69	7.3	360	3.6	2.8	0.75	252	63
45	**52**	1)	**M3AA**	**250 SMB**	3GAA 253 002-••C	985	93.4	93.7	0.84	83	7.2	436	3.2	2.8	1.49	320	63

6

1) Temperature rise class F.

Note: When ordering, following variant codes should be added;
Frame sizes 90-100: 094 Ex n design.
Frame sizes 112-280: 480 Ex nA, fulfilling EN 50021
456 Ex nA design, fulfilling IEC 60079-15, with certificate.

The two bullets in the product code indicate choice of mounting arrangement, voltage and frequency (see ordering information)

General purpose Non-sparking motors Ex nA

Technical data for totally enclosed squirrel cage three phase aluminum motors

ATEX Certified

IP 55, IC 411; Insulation class F, temperature rise class B

Output kW 50 Hz	Output kW 60 Hz		Motor type		Product code	Speed r/min	Efficiency FL 100%	Efficiency FL 75%	Power factor cos φ	Current I_N A	Current I_s/I_N	Torque T_N Nm	Torque T_s/T_N	Torque T_{max}/T_N	Moment of inertia J=1/4GD²	Weight kg	Sound pressure level L_p dB(A)
750 r/min = 8-poles						**400 V 50 Hz**									**Basic design**		
0.37	**0.45**		**M3AAN**	**90 S**	3GAA 094 001-••E	700	61.5	43.4	0.56	1.6	3.0	5	1.9	2.4	0.0032	13	43
0.55	**0.65**		**M3AAN**	**90 L**	3GAA 094 002-••E	690	62.9	56.4	0.57	2.35	3.0	7.5	1.7	2.1	0.0043	16	43
0.75	**0.9**		**M3AAN**	**100 LA**	3GAA 104 001-••E	700	72.0	63.6	0.59	2.55	3.5	10	2.1	2.7	0.0069	20	46
1.1	**1.3**		**M3AAN**	**100 LB**	3GAA 104 002-••E	700	73.0	68.8	0.64	3.35	3.5	15	2.1	2.7	0.0082	23	46
1.5	**1.7**		**M3AAN**	**112 M**	3GAA 114 001-••B	695	74.5	75.9	0.65	4.5	4.1	20.6	1.9	2.4	0.016	28	52
2.2	**2.5**		**M3AAN**	**132 S**	3GAA 134 001-••B	720	80.5	77.8	0.67	5.9	5.3	29.2	1.6	2.5	0.038	46	56
3	**3.5**		**M3AAN**	**132 M**	3GAA 134 002-••B	720	82.0	79.2	0.68	7.8	5.5	39.8	1.8	2.5	0.045	53	56
4	**4.6**		**M3AA**	**160 MA**	3GAA 164 101-••C	715	84.1	84.7	0.69	10	5.1	53	2.1	2.6	0.072	75	59
5.5	**6.3**		**M3AA**	**160 M**	3GAA 164 102-••C	710	84.7	85.6	0.70	13.4	5.5	74	2.4	2.6	0.091	88	59
7.5	**8.6**		**M3AA**	**160 L**	3GAA 164 103-••C	715	86.3	87.3	0.70	18.1	5.4	100	2.4	2.7	0.131	118	59
11	**13**		**M3AA**	**180 L**	3GAA 184 101-••C	720	89.6	90.3	0.76	23.5	5.7	146	2.1	2.5	0.224	147	59
15	**17**		**M3AA**	**200 MLA**	3GAA 204 001-••C	740	91.1	91.6	0.82	29	7.5	196	3.0	3.2	0.45	175	60
18.5	**21**		**M3AA**	**225 SMA**	3GAA 224 001-••C	730	91.1	91.6	0.79	37	6.8	242	2.8	3.1	0.61	210	63
22	**25**		**M3AA**	**225 SMB**	3GAA 224 002-••C	730	91.5	92.2	0.77	45	6.4	287	2.4	2.6	0.68	225	63
30	**34**		**M3AA**	**250 SMA**	3GAA 254 001-••C	735	92.8	93.1	0.79	59	7.3	389	2.2	2.6	1.25	280	63
37	**42**		**M3AA**	**280 SMA**	3GAA 284 001-••C	735	93.0	93.3	0.81	74	7.4	478	2.9	3.1	1.52	375	63
750 r/min = 8-poles						**400 V 50 Hz**									**High-output design**		
0.75	**0.9**	[1]	**M3AAN**	**90 LB**	3GAA 094 003-••E	680	64.0	60.0	0.65	2.65	3.0	10	1.8	2.0	0.0048	18	43
2	**2.3**	[1]	**M3AAN**	**112 MB**	3GAA 114 002-••B	685	73.5	68.4	0.67	5.9	4.4	27.9	1.9	2.2	0.018	33	52
1.5	**1.75**	[1]	**M3AAN**	**100 LC**	3GAA 104 003-••E	685	71.0	65.9	0.66	4.7	3.5	21	1.8	2.2	0.009	26	46
3.8	**4.4**	[1]	**M3AAN**	**132 MB**	3GAA 134 003-••B	710	80.5	78.3	0.69	9.9	5.2	51	1.8	2.3	0.049	59	56
18.5	**21**		**M3AA**	**200 MLB**	3GAA 204 002-••C	735	91.4	91.8	0.81	36	7.3	241	2.6	3.1	0.54	200	60
37	**42**		**M3AA**	**250 SMB**	3GAA 254 002-••C	735	93.0	93.3	0.81	74	7.4	478	2.9	3.1	1.52	320	63

[1] Temperature rise class F.

Note: When ordering, following variant codes should be added;
Frame sizes 90-100: 094 Ex n design.
Frame sizes 112-280: 480 Ex nA, fulfilling EN 50021
456 Ex nA design, fulfilling IEC 60079-15, with certificate.

The two bullets in the product code indicate choice of mounting arrangement, voltage and frequency (see ordering information)

General purpose Non-sparking motors Ex nA

Technical data for totally enclosed squirrel cage three phase cast iron motors

ATEX Certified

IP 55. IC 411; Insulation class F. temperature rise class B

Output kW	Motor type		Product code	Speed r/min	Efficiency at FL 100%	Efficiency at FL 75%	Power factor cos φ	Current I_N A	Current I_s/I_N	Torque T_N Nm	Torque T_s/T_N	Torque T_{max}/T_N	Moment of inertia J = 1/4 GD²	Weight kg	Sound pressure level L_p dB(A)
3000 r/min = 2-poles				**400 V 50 Hz**						**Basic design**					
0.37	**M2GP**	**71 MA**	3GGP 071 310-••A	2807	71.4	69.4	0.81	0.88	4.9	1.25	2.5	2.6	0.0003	10	56
0.55	**M2GP**	**71 MB**	3GGP 071 320-••A	2789	74.2	73.6	0.82	1.26	5.0	1.9	2.5	2.6	0.00037	11	56
0.75	**M2GP**	**80 MA**	3GGP 081 310-••A	2840	76.1	76.6	0.85	1.7	6.1	2.52	2.2	3.0	0.00091	16	57
1.1	**M2GP**	**80 MB**	3GGP 081 320-••A	2855	79.0	78.9	0.85	2.4	7.0	3.68	2.2	2.2	0.00107	17	58
1.5	**M2GP**	**90 SA**	3GGP 091 110-••A	2850	79.9	79.9	0.87	3.15	7.0	5.03	2.2	2.5	0.00135	21	61
2.2	**M2GP**	**90 LA**	3GGP 091 510-••A	2850	82.3	82.6	0.86	4.53	7.0	7.37	2.2	3.5	0.00163	24	61
3	**M2GP**	**100 LA**	3GGP 101 510-••A	2860	83.8	84.0	0.88	5.93	7.0	10.02	2.2	3.0	0.00402	33	65
4	**M2GP**	**112 MA**	3GGP 111 310-••A	2900	85.7	85.3	0.90	7.55	7.0	13.17	2.2	3.2	0.00671	42	67
5.5	**M2GP**	**132 SA**	3GGP 131 110-••A	2907	87.6	87.8	0.87	10.4	7.4	18	1.8	2.7	0.01241	58	70
7.5	**M2GP**	**132 SB**	3GGP 131 120-••A	2920	89.0	90.5	0.90	13.6	7.0	24.53	2.2	3.5	0.01491	63	70
11	**M2GP**	**160 MA**	3GGP 161 310-••A	2930	90.5	90.6	0.89	19.82	7.2	35.9	3.0	3.4	0.0436	112	72
15	**M2GP**	**160 MB**	3GGP 161 320-••A	2920	90.7	90.8	0.89	27.03	6.9	49.1	2.7	3.5	0.0551	122	72
18.5	**M2GP**	**160 LA**	3GGP 161 510-••A	2918	91.6	91.9	0.90	33	7.5	61	2.8	3.5	0.06549	142	72
30	**M2GP**	**200 LA**	3GGP 201 510-••A	2951	92.3	92.0	0.90	53	7.2	97	2.3	3.1	0.14821	235	79
37	**M2GP**	**200 LB**	3GGP 201 520-••A	2951	92.8	92.8	0.90	65	7.0	120	2.2	3.1	0.16822	254	79
45	**M2GP**	**225 MA**	3GGP 221 310-••A	2970	93.5	93.0	0.89	78.81	7.9	145	2.3	3.0	0.29345	328	81
55	**M2GP**	**250 MA**	3GGP 251 310-••A	2960	93.3	92.8	0.90	95	8.2	177	2.6	3.5	0.3784	390	81
1500 r/min = 4-poles				**400 V 50 Hz**						**Basic design**					
0.25	**M2GP**	**71 MA**	3GGP 072 310-••A	1373	67.1	65.0	0.73	0.74	4.0	1.7	2.2	2.6	0.00053	11	43
0.37	**M2GP**	**71 MB**	3GGP 072 320-••A	1398	71.8	71.7	0.76	1.01	4.1	2.5	2.2	2.6	0.00066	11	45
0.55	**M2GP**	**80 MA**	3GGP 082 310-••A	1422	74.7	72.7	0.73	1.4	5.0	3.7	2.5	2.8	0.00145	16	46
0.75	**M2GP**	**80 MB**	3GGP 082 320-••A	1405	75.6	76.3	0.76	1.87	4.7	5.1	2.5	2.6	0.00174	17	46
1.1	**M2GP**	**90 SA**	3GGP 092 110-••A	1400	78.5	78.8	0.79	2.65	6.0	7.5	2.3	2.4	0.00254	21	52
1.5	**M2GP**	**90 LA**	3GGP 092 510-••A	1390	79.5	80.1	0.80	3.5	6.0	10.31	2.3	2.6	0.00317	25	52
2.2	**M2GP**	**100 LA**	3GGP 102 510-••A	1419	82.3	83.1	0.81	5.12	5.6	14.8	2.8	3.4	0.00679	32	53
3	**M2GP**	**100 LB**	3GGP 102 520-••A	1420	83.6	83.3	0.83	6.3	6.5	20.18	2.3	2.8	0.00862	36	53
4	**M2GP**	**112 MA**	3GGP 112 310-••A	1430	85.7	85.3	0.82	8.29	6.5	26.71	2.3	2.8	0.01306	45	56
5.5	**M2GP**	**132 SA**	3GGP 132 110-••A	1430	86.6	87.7	0.85	10.9	6.5	36.73	2.3	2.9	0.02673	60	59
7.5	**M2GP**	**132 MA**	3GGP 132 310-••A	1440	89.0	88.8	0.85	14.4	6.5	49.74	2.3	2.7	0.03432	73	59
11	**M2GP**	**160 MA**	3GGP 162 310-••A	1460	89.8	90.2	0.85	21	6.9	72	2.3	3.2	0.06543	116	66
15	**M2GP**	**160 LA**	3GGP 162 510-••A	1460	90.6	91.3	0.86	27.97	6.6	98	2.3	3.0	0.09349	137	66
18.5	**M2GP**	**180 MA**	3GGP 182 310-••A	1470	91.7	91.7	0.86	34.12	7.5	120	2.5	3.5	0.16049	170	66
22	**M2GP**	**180 LA**	3GGP 182 510-••A	1470	92.3	92.5	0.88	39.44	7.7	143	2.5	3.5	0.18046	186	66
30	**M2GP**	**200 LA**	3GGP 202 510-••A	1470	92.9	93.0	0.88	53.37	7.5	195	2.3	3.2	0.2819	254	71
37	**M2GP**	**225 SA**	3GGP 222 110-••A	1480	92.9	92.5	0.85	67.85	7.6	239	2.3	3.2	0.37	308	73
45	**M2GP**	**225 MA**	3GGP 222 310-••A	1480	93.5	93.3	0.86	81	7.4	290	2.3	3.1	0.42	335	73
55	**M2GP**	**250 MA**	3GGP 252 310-••A	1479	94.4	94.5	0.88	96	7.1	355	2.6	3.0	0.78	450	76
1000 r/min = 6-poles				**400 V 50 Hz**						**Basic design**					
0.18	**M2GP**	**71 MA**	3GGP 073 310-••A	901	57.0	52.3	0.66	0.64	3.0	1.9	2.1	2.3	0.00056	10	42
0.25	**M2GP**	**71 MB**	3GGP 073 320-••A	887	61.8	60.2	0.66	0.87	3.0	2.7	2.2	2.3	0.00074	11	42
0.37	**M2GP**	**80 MA**	3GGP 083 310-••A	942	64.7	64.9	0.67	1.16	3.3	3.8	1.8	2.4	0.00159	17	45
0.55	**M2GP**	**80 MB**	3GGP 083 320-••A	927	66.6	66.7	0.69	1.72	3.3	5.7	1.7	2.2	0.00196	18	45
0.75	**M2GP**	**90 SA**	3GGP 093 110-••A	920	72.3	71.5	0.73	2.12	5.0	7.79	2.0	2.3	0.00292	21	48
1.1	**M2GP**	**90 LA**	3GGP 093 510-••A	920	74.2	74.3	0.75	2.94	5.0	11.42	2.0	2.6	0.00379	25	48
1.5	**M2GP**	**100 LA**	3GGP 103 510-••A	940	77.1	76.4	0.78	3.78	5.5	15.24	2.0	2.4	0.00999	32	51
2.2	**M2GP**	**112 MA**	3GGP 113 310-••A	940	80.9	82.0	0.77	5.23	5.5	22.35	2.0	2.3	0.03116	40	54
3	**M2GP**	**132 SA**	3GGP 133 110-••A	960	83.3	84.2	0.79	6.73	6.5	29.84	2.0	2.4	0.03116	55	56
4	**M2GP**	**132 MA**	3GGP 133 310-••A	960	84.7	84.9	0.78	8.93	6.5	39.79	2.0	2.9	0.04074	65	56
5.5	**M2GP**	**132 MB**	3GGP 133 320-••A	960	86.6	86.2	0.80	11.7	6.5	54	2.0	3.0	0.05332	75	56
7.5	**M2GP**	**160 MA**	3GGP 163 310-••A	970	88.4	88.5	0.78	15.77	6.2	74	2.0	2.4	0.09231	119	61
11	**M2GP**	**160 LA**	3GGP 163 510-••A	970	88.9	89.2	0.78	23	6.4	108	2.2	2.5	0.1297	140	62
15	**M2GP**	**180 LA**	3GGP 183 510-••A	980	90.5	90.6	0.82	29.67	6.5	146	2.3	3.1	0.2418	180	61
18.5	**M2GP**	**200 LA**	3GGP 203 510-••A	980	91.2	91.2	0.82	36.06	6.6	180	2.2	3.0	0.34174	231	64
22	**M2GP**	**200 LB**	3GGP 203 520-••A	980	91.8	92.1	0.83	42.32	6.4	214	2.2	2.9	0.46837	254	64
37	**M2GP**	**250 MA**	3GGP 253 310-••A	980	92.1	92.2	0.88	66.5	6.6	361	2.2	2.7	0.97	382	68

The two bullets in the product code indicate choice of mounting arrangement, voltage and frequency (see ordering information).

Values above are given for 400 V 50 Hz; data for other voltages, frequencies and temperatures on request.

Rating plates

For motor sizes 90 to 132 the rating plate gives one current value for the voltage area. That is the highest current that can occur within the voltage area with the given output. Aluminum motors, frame sizes 90 to 100, are self-certified.

For motor sizes 160 to 280 the rating plate is in table form giving values for speed, current and power factor for six voltages.

European standards require a special marking on safety motors. The marking shall include the following:
- type of protection
- apparatus group
- temperature class
- name of certifying body
- certificate number

M3AAN 90-100

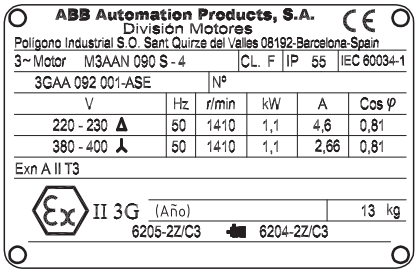

M2AA/M3AA 112-132

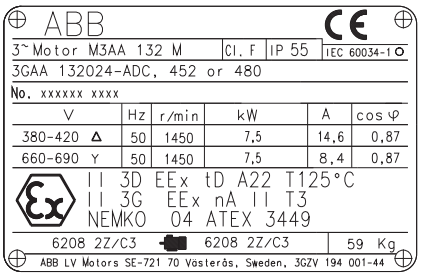

M2AA/M3AA 160-280

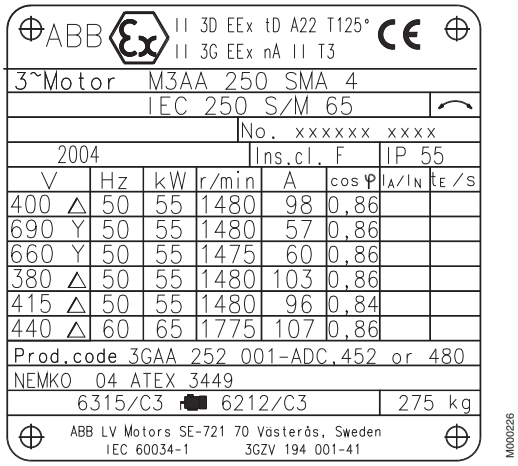

M2GP 71-132

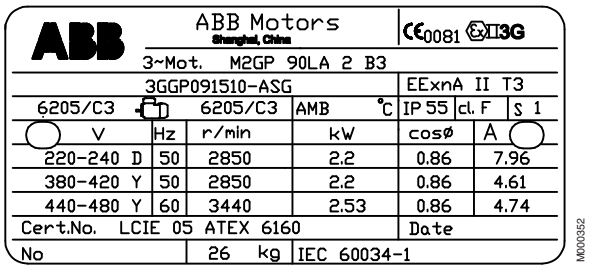

M2GP 160-250

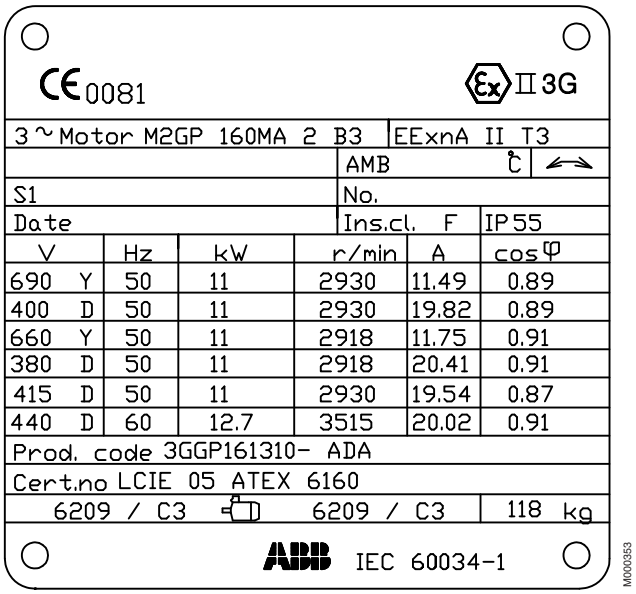

General purpose Non-sparking aluminum motors - Variant codes

Code [1] / Variant	90	100	112	132	160	180	200	225	250	280
Balancing										
052 Vibration acc. to Grade A (IEC 60034-14).	S	S	S	S	S	S	S	S	S	S
417 Vibration acc. to Grade B (IEC 60034-14).	P	P	P	P	R	R	R	R	R	R
423 Balanced without key	P	P	R	R	R	R	R	R	R	R
424 Full key balancing.	P	P	P	P	P	P	P	P	P	P
Bearings and Lubrication										
036 Transport lock for bearings.	M	M	M	M	M	M	M	M	M	M
037 Roller bearing at D-end.	M	M	P	P	M	M	M	M	M	M
040 Heat resistant grease.	M	M	M	P	S	S	S	S	S	S
041 Bearings regreasable via grease nipples.	M	M	P	P	M	M	S	S	S	S
043 SPM nipples.	NA	NA	NA	NA	M	M	M	M	M	M
058 Angular contact bearing at D-end, shaft force away from bearing.	P	P	P	P	M	M	M	M	M	M
107 Pt100 2-wire in bearings	NA	NA	NA	NA	NA	NA	R	R	R	R
188 63-series bearings	M	M	M	M	S	S	S	S	S	S
194 2Z bearings greased for life at both ends	S	S	S	S	S	S	R	R	R	R
796 Grease nipples JIS B 1575 PT 1/8 Type A	NA	NA	M	M	M	M	M	M	M	M
797 Stainless steel SPM Nipples	NA	NA	NA	NA	P	P	P	P	P	P
798 Stainless steel grease nipples	NA	NA	NA	NA	P	P	P	P	P	P
Branch standard designs										
142 “Manilla connection”	P	P	P	P	P	P	P	P	P	P
178 Stainless steel / acid proof bolts.	M	M	M	M	M	M	M	M	M	M
209 Non-standard voltage or frequency, (special winding).	P	P	P	P	P	P	P	P	P	P
217 Cast iron D-end shield (on aluminium motor).	M	M	M	M	R	R	R	R	R	S
232 Cast iron N-end shield (on aluminium motor).	NA	NA	NA	NA	R	R	R	R	R	R
425 Corrosion protected stator and rotor core.	P	P	P	P	P	P	P	P	P	P
Cooling system										
068 Metal fan.	M	M	M	M	M	M	M	M	M	M
075 Cooling method IC418 (without fan).	P	P	P	P	NA	NA	NA	NA	NA	NA
183 Separate motor cooling (fan axial, N-end).	M	M	M	P	NA	NA	NA	NA	NA	NA
Documentation										
141 Binding dimension drawing.	M	M	M	M	M	M	M	M	M	M
Drain holes										
065 Plugged existing drain holes.	M	M	M	M	S	S	S	S	S	S
Earthing Bolt										
067 External earthing bolt.	M	M	M	M	S	S	S	S	S	S
Hazardous Environments										
094 Ex n design.	M	M	M	M	NA	NA	NA	NA	NA	NA
452 DIP/Ex tD acc. to ATEX directive 94/9/EC, T= 125 °C, cat. 3D, IP55	M	M	M	M	M	M	M	M	M	M
453 DIP/Ex tD acc. to ATEX directive 94/9/EC, T= 125 °C, cat. 2D, IP65	P	P	P	P	NA	NA	NA	NA	NA	NA
456 Ex nA design, fulfilling IEC 60079-15, with certificate.	NA	NA	NA	NA	M	M	M	M	M	M

[1] Certain variant codes cannot be used simultaneously.

S = Included as standard.
M = On modification of a stocked motor, or on new manufacture, the number per order may be limited.

P = New manufacture only.
R = On request.
NA = Not applicable

Code [1] / Variant		90	100	112	132	160	180	200	225	250	280
480	Ex nA II acc. to ATEX directive 94/9/EC, temp. class T3	NA	NA	NA	NA	M	M	M	M	M	M
Heating elements											
450	Heating element, 100-120V.	M	M	M	M	M	M	M	M	M	M
451	Heating element, 200-240V.	M	M	M	M	M	M	M	M	M	M
Insulation system											
014	Winding insulation class H.	P	P	P	P	NA	NA	NA	NA	NA	NA
405	Special winding insulation for frequency converter supply.	P	P	P	P	P	P	P	P	P	P
Mounting arrangements											
007	IM 3001 flange mounted, IEC flange, from IM 1001 (B5 from B3).	M	M	M	NA	NA	NA	M	M	M	M
008	IM 2101 foot/flange mounted, IEC flange, from IM 1001 (B34 from B3).	M	M	M	M	M	NA	NA	NA	NA	NA
009	IM 2001 foot/flange mounted, IEC flange, from IM 1001 (B35 from B3).	M	M	M	M	M	M	M	M	M	M
047	IM 3601 flange mounted, IEC flange, from IM 3001 (B14 from B5).	M	M	M	M	M	NA	NA	NA	NA	NA
048	IM 3001 flange mounted, IEC flange, from IM 3601 (B5 from B14).	M	M	M	M	NA	NA	NA	NA	NA	NA
066	Modified for non-standard mounting position (please specify IM xxxx), (must be ordered for all mounting arrangements exluding IM B3 (1001) and IM B5 (3001).	M	M	M	M	NA	NA	NA	NA	NA	NA
091	(IM 2001) foot/flange mounted, DIN A-flange, from IM 1001 (B35 from B3).	M	M	NA	NA	NA	NA	NA	NA	NA	NA
093	IM 3601 flange mounted, IEC flange, from IM 1001 (B14 from B3).	M	M	M	NA	NA	NA	NA	NA	NA	NA
200	Flange ring holder.	M	M	M	M	NA	NA	NA	NA	NA	NA
218	Flange ring FT 85.	M	NA	NA	NA	NA	NA	NA	NA	NA	NA
219	Flange ring FT 100.	M	NA	NA	NA	NA	NA	NA	NA	NA	NA
220	Flange ring FF 100.	M	NA	NA	NA	NA	NA	NA	NA	NA	NA
223	Flange ring FF 115.	M	NA	NA	NA	NA	NA	NA	NA	NA	NA
224	Flange ring FT 115.	M	NA	NA	NA	NA	NA	NA	NA	NA	NA
226	Flange ring FF 130.	M	M	M	NA	NA	NA	NA	NA	NA	NA
227	Flange ring FT 130.	M	M	M	NA	NA	NA	NA	NA	NA	NA
229	Flange FT 130.	M	M	M	NA	NA	NA	NA	NA	NA	NA
233	Flange ring FF 165.	M	M	M	NA	NA	NA	NA	NA	NA	NA
234	Flange ring FT 165.	M	M	M	NA	NA	NA	NA	NA	NA	NA
235	Flange FF 165.	M	M	M	NA	NA	NA	NA	NA	NA	NA
236	Flange FT 165.	NA	NA	NA	M	NA	NA	NA	NA	NA	NA
243	Flange ring FF 215.	P	M	M	M	NA	NA	NA	NA	NA	NA
244	Flange ring FT 215.	NA	M	M	M	NA	NA	NA	NA	NA	NA
245	Flange FF 215.	NA	M	M	NA	NA	NA	NA	NA	NA	NA
253	Flange ring FF 265.	NA	NA	NA	M	NA	NA	NA	NA	NA	NA
254	Flange ring FT 265.	NA	NA	NA	M	NA	NA	NA	NA	NA	NA
255	Flange FF 265.	NA	NA	NA	M	NA	NA	NA	NA	NA	NA
260	Flange FT 115.	M	M	NA	NA	NA	NA	NA	NA	NA	NA
306	IM 1001 foot mounted, from IM 3601 (B3 from B14).	M	M	M	NA	NA	NA	NA	NA	NA	NA

[1] Certain variant codes cannot be used simultaneously.

S = Included as standard.
M = On modification of a stocked motor, or on new manufacture, the number per order may be limited.

P = New manufacture only.
R = On request.
NA = Not applicable

6

Code [1] / Variant	90	100	112	132	160	180	200	225	250	280
307 IM 2101 foot/flange mounted, IEC flange, from IM 3601 (B34 from B14).	M	M	M	NA	NA	NA	NA	NA	NA	NA
308 IM 2001 foot/flange mounted, IEC flange, from IM 3601 (B35 from B14).	M	M	M	NA	NA	NA	NA	NA	NA	NA
309 IM 1001 foot mounted, from IM 3001 (B3 from B5).	M	M	M	NA	NA	NA	NA	NA	NA	NA
310 IM 2101 foot/flange mounted, IEC flange, from IM 3001 (B34 from B5).	M	M	M	NA	NA	NA	NA	NA	NA	NA
311 IM 2001 foot/flange mounted, IEC flange, from IM 3001 (B35 from B5).	M	M	M	NA	NA	NA	NA	NA	NA	NA
312 IM 1001 foot mounted, from IM 2101 (B3 from B34).	M	M	M	NA	NA	NA	NA	NA	NA	NA
313 IM 3601 flange mounted, IEC flange, from IM 2101 (B14 from B34).	M	M	M	NA	NA	NA	NA	NA	NA	NA
314 IM 3001 flange mounted, IEC flange, from IM 2101 (B5 from B34).	M	M	M	NA	NA	NA	NA	NA	NA	NA
315 IM 2001 foot/flange mounted, IEC flange, from IM 2101 (B35 from B34).	M	M	M	NA	NA	NA	NA	NA	NA	NA
316 IM 1001 foot mounted, from IM 2001 (B3 from B35).	M	M	M	M	NA	NA	NA	NA	NA	NA
317 IM 3601 flange mounted, IEC flange, from IM 2001 (B14 from B35).	M	M	M	NA	NA	NA	NA	NA	NA	NA
318 IM 3001 flange mounted, IEC flange, from IM 2001 (B5 from B35).	M	M	M	NA	NA	NA	NA	NA	NA	NA
319 IM 2101 foot/flange mounted, IEC flange, from IM 2001 (B34 from B35).	M	M	M	NA	NA	NA	NA	NA	NA	NA
Painting										
114 Special paint colour, standard grade.	M	M	M	M	M	M	M	M	M	M
179 Special paint specification.	P	P	P	P	R	R	R	R	R	R
Protection										
005 Metal protective roof, vertical motor, shaft down.	M	M	M	M	M	M	M	M	M	M
072 Radial seal at D-end.	M	M	M	M	M	M	M	M	M	M
158 Degree of protection IP65.	M	M	M	P	NA	NA	NA	NA	NA	NA
211 Weather protected, IP xx W	P	P	P	P	NA	NA	NA	NA	NA	NA
403 Degree of protection IP56.	M	M	P	P	M	M	NA	NA	NA	NA
404 Degree of protection IP56, without fan and fan cover	P	P	P	P	NA	NA	NA	NA	NA	NA
784 Gamma-seal at D-end.	M	M	NA	NA	M	M	M	M	M	M
Rating & instruction plates										
002 Restamping voltage, frequency and output, continuous duty.	M	M	M	M	M	M	M	M	M	M
003 Individual serial number.	M	M	M	M	S	S	S	S	S	S
004 Additional text on std rating plate (max 12 digits on free text line)	NA	NA	M	M	NA	NA	NA	NA	NA	NA
095 Restamping output (maintained voltage, frequency), intermittent duty.	M	M	M	M	R	R	R	R	R	R
098 Stainless rating plate.	M	M	M	M	NA	NA	NA	NA	NA	NA
135 Mounting of additional identification plate, stainless.	M	M	M	M	NA	NA	NA	NA	NA	NA
138 Mounting of additional identification plate, aluminium.	M	M	M	M	M	M	M	M	M	M
139 Additional identification plate delivered loose.	M	M	M	M	M	M	M	M	M	M
160 Additional rating plate affixed.	M	M	M	M	M	M	M	M	M	M
161 Additional rating plate delivered loose.	M	M	M	M	M	M	M	M	M	M
162 Rating plate fixed to stator.	M	M	M	M	S	S	S	S	S	S
163 Frequency converter rating plate. Rating data according to quotation.	NA	NA	NA	NA	M	M	M	M	M	M

[1] Certain variant codes cannot be used simultaneously.

S = Included as standard.
M = On modification of a stocked motor, or on new manufacture, the number per order may be limited.

P = New manufacture only.
R = On request.
NA = Not applicable

Code [1] / Variant		90	100	112	132	160	180	200	225	250	280
198	Aluminium rating plate.	M	M	M	M	S	S	S	S	S	S
Shaft & rotor											
069	Two shaft extensions as per basic catalogue.	P	P	P	P	R	R	R	R	R	R
070	One or two special shaft extensions, standard shaft material.	P	P	P	P	R	R	R	R	R	R
131	Motor delivered with half key (Key not exceeding shaft diameter)	NA	NA	NA	NA	M	M	M	M	M	M
164	Shaft extension with closed key-way.	S	S	S	S	S	S	S	S	S	S
165	Shaft extension with open key-way.	P	P	NA	NA	NA	NA	NA	NA	NA	NA
410	Stainless steel shaft (standard or non-standard design).	P	P	P	P	NA	NA	NA	NA	NA	NA
Stator winding temperature sensors											
121	Bimetal detectors, break type (NCC), (3 in series), 130°C, in stator winding.	M	M	M	M	M	M	M	M	M	M
122	Bimetal detectors, break type (NCC), (3 in series), 150°C, in stator winding.	M	M	M	M	M	M	M	M	M	M
123	Bimetal detectors, break type (NCC), (3 in series), 170°C, in stator winding.	M	M	P	P	NA	NA	NA	NA	NA	NA
124	Bimetal detectors, break type (NCC), (3 in series), 140°C, in stator winding.	NA	NA	NA	NA	M	M	M	M	M	M
125	Bimetal detectors, break type (NCC), (2x3 in series), 150°C, in stator winding.	M	M	P	P	M	M	M	M	M	M
127	Bimetal detectors, break type (NCC), (3 in series, 130°C & 3 in series, 150°C), in stator winding.	M	M	P	P	M	M	M	M	M	M
321	Bimetal detectors, closing type (NO), (3 in parallel), 130°C, in stator winding.	M	M	M	M	NA	NA	NA	NA	NA	NA
322	Bimetal detectors, closing type (NO), (3 in parallel), 150°C, in stator winding.	M	M	M	M	NA	NA	NA	NA	NA	NA
323	Bimetal detectors, closing type (NO), (3 in parallel), 170°C, in stator winding.	P	P	P	P	NA	NA	NA	NA	NA	NA
325	Bimetal detectors, closing type (NO), (2x3 in parallel), 150°C, in stator winding.	P	P	P	P	NA	NA	NA	NA	NA	NA
327	Bimetal detectors, closing type (NO), (3 in parallel, 130°C & 3 in parallel, 150°C), in stator winding.	P	P	P	P	NA	NA	NA	NA	NA	NA
435	PTC - thermistors (3 in series), 130°C, in stator winding.	M	M	M	M	M	M	M	M	M	M
436	PTC - thermistors (3 in series), 150°C, in stator winding.	M	M	M	M	M	M	S	S	S	S
437	PTC - thermistors (3 in series), 170°C, in stator winding.	M	M	M	M	NA	NA	NA	NA	NA	NA
439	PTC - thermistors (2x3 in series), 150°C, in stator winding.	M	M	M	P	M	M	M	M	M	M
441	PTC - thermistors (3 in series, 130°C & 3 in series, 150°C), in stator winding.	M	M	P	M	M	M	M	M	M	M
442	PTC - thermistors (3 in series, 150°C & 3 in series, 170°C), in stator winding.	NA	NA	NA	NA	M	M	M	M	M	M
445	Pt-100 2-wire in stator winding, 1 per phase	NA	NA	NA	NA	M	M	M	M	M	M
446	Pt-100 2-wire in stator winding, 2 per phase	NA	NA	NA	NA	M	M	M	M	M	M
Terminal box											
015	Motor supplied in D connection.	M	M	NA	NA	M	M	M	M	M	M
016	9 terminals in terminal box	P	P	P	P	NA	NA	NA	NA	NA	NA
017	Motor supplied in Y connection.	M	M	NA	NA	M	M	M	M	M	M

[1] Certain variant codes cannot be used simultaneously.

S = Included as standard.
M = On modification of a stocked motor, or on new manufacture, the number per order may be limited.

P = New manufacture only.
R = On request.
NA = Not applicable

6

Code [1] / Variant	90	100	112	132	160	180	200	225	250	280
018 D connection in terminal box (reconnection from Y), single phase Steinmetz.	M	M	NA	NA	NA	NA	NA	NA	NA	NA
019 Larger than standard terminal box	NA	NA	NA	NA	R	R	R	R	R	NA
021 Terminal box LHS (seen from D-end).	P	P	NA	NA	NA	NA	P	P	P	P
022 Cable entry LHS (seen from D-end).	NA	NA	NA	NA	P	P	P	P	P	P
136 Extended cable connection, standard terminal box.	M	M	NA	NA	R	R	R	R	R	R
137 Extended cable connection, low terminal box, “Flying leads”.	P	P	P	P	NA	NA	NA	NA	NA	NA
180 Terminal box RHS (seen from D-end).	P	P	P	NA	NA	NA	P	P	P	P
187 Cable glands of non-standard design.	NA	NA	NA	NA	R	R	R	R	R	R
230 Standard metal cable glands.	M	M	M	M	M	M	M	M	M	M
375 Standard plastic cable gland	M	M	M	M	NA	NA	NA	NA	NA	NA
376 Two standard plastic cable glands	M	M	M	M	NA	NA	NA	NA	NA	NA
418 Separate terminal box for auxiliaries, std. material	NA	NA	NA	NA	M	M	M	M	M	M
731 Two standard metal cable glands.	M	M	M	M	M	M	M	M	M	M
Testing										
140 Test confirmation	M	M	M	M	M	M	M	M	M	M
145 Type test report from a catalogue motor, 400V 50Hz.	M	M	M	M	M	M	M	M	M	M
146 Type test with report for motor from specific delivery batch.	M	M	M	M	M	M	M	M	M	M
147 Type test with report for motor from specific delivery batch, customer witnessed.	M	M	M	M	M	M	M	M	M	M
148 Routine test report.	M	M	M	M	M	M	M	M	M	M
149 Test according to separate test specification.	M	M	M	M	R	R	R	R	R	R
153 Reduced test for classification society.	M	M	M	M	M	M	M	M	M	M
221 Type test and multi-point load test with report for motor from specific delivery batch.	M	M	M	M	M	M	M	M	M	M
222 Torque/speed curve, type test and multi-point load test with report for motor from specific delivery batch.	M	M	M	M	M	M	M	M	M	M
760 Vibration level test	M	M	M	M	M	M	M	M	M	M
761 Vibration spectrum test.	NA	NA	NA	NA	R	R	R	R	R	R
762 Noise level test.	M	M	M	M	M	M	M	M	M	M
763 Noise spectrum test.	NA	NA	NA	NA	R	R	R	R	R	R
764 Complete test with ABB frequency converter.	NA	NA	NA	NA	R	R	R	R	R	R
Variable speed drives										
182 Pulse sensor mounted as specified.	NA	NA	NA	NA	R	R	R	R	R	R
470 Prepared for hollow shaft pulse tacho (L&L equivalent).	NA	NA	NA	NA	M	M	M	M	M	M
472 1024 pulse tacho (L&L 861).	NA	NA	NA	NA	R	R	R	R	R	R
473 2048 pulse tacho (L&L 861).	NA	NA	NA	NA	R	R	R	R	R	R
570 Prepared for hollow shaft pulse tacho (L&L 503).	NA	NA	NA	NA	M	M	M	M	M	M
704 EMC cable gland.	P	P	P	P	M	M	M	M	M	M
Y/D starting										
118 Terminals for Y/D start at high speed (two speed windings).	P	P	P	P	NA	NA	NA	NA	NA	NA

[1] Certain variant codes cannot be used simultaneously.

S = Included as standard.
M = On modification of a stocked motor, or on new manufacture, the number per order may be limited.

P = New manufacture only.
R = On request.
NA = Not applicable

General purpose Non-sparking cast iron motors - Variant codes

Code [1] / Variant		71	80	90	100	112	132	160	180	200	225	250
Bearings and Lubrication												
037	Roller bearing at D-end.	NA	NA	NA	NA	NA	NA	M	M	M	M	M
040	Heat resistant grease.	S	S	S	S	S	S	S	S	S	S	S
194	2Z bearings greased for life at both ends	S	S	S	S	S	S	M	M	M	M	M
797	Stainless steel SPM Nipples	NA	NA	NA	NA	NA	NA	M	M	M	M	M
798	Stainless steel grease nipples	NA	NA	NA	NA	NA	NA	M	M	M	M	M
Branch standard designs												
178	Stainless steel / acid proof bolts.	M	M	M	M	M	M	M	M	M	M	M
Cooling system												
068	Metal fan.	M	M	M	M	M	M	M	M	M	M	M
Documentation												
141	Binding dimension drawing.	M	M	M	M	M	M	M	M	M	M	M
Drain holes												
065	Plugged existing drain holes.	M	M	M	M	M	M	M	M	M	M	M
Earthing Bolt												
067	External earthing bolt.	S	S	S	S	S	S	S	S	S	S	S
Hazardous Environments												
452	DIP/Ex tD acc. to ATEX directive 94/9/EC , T= 125 ºC, cat. 3D, IP55	M	M	M	M	M	M	M	M	M	M	M
453	DIP/Ex tD acc. to ATEX directive 94/9/EC , T= 125 ºC, cat. 2D, IP65	R	R	R	R	R	R	R	R	R	R	R
454	DIP/Ex tD acc. to ATEX directive 94/9/EC , T= 125 ºC, cat. 3D, IP65	M	M	M	M	M	M	M	M	M	M	M
456	Ex nA design, fulfilling IEC 60079-15, with certificate.	R	R	R	R	R	R	R	R	R	R	R
480	Ex nA II acc. to ATEX directive 94/9/EC, temp. class T3	S	S	S	S	S	S	R	R	R	R	R
804	DIP/Ex tD, IEC 61241, T125 ºC, IP55 (zone 22)	M	M	M	M	M	M	M	M	M	M	M
805	DIP/Ex tD, IEC 61241, T125 ºC, IP65 (zone 21)	R	R	R	R	R	R	R	R	R	R	R
806	DIP/Ex tD, IEC 61241, T125 ºC, IP65 (zone 22)	M	M	M	M	M	M	M	M	M	M	M
814	Ex tD (DIP) motors, temperature class T 150C	M	M	M	M	M	M	M	M	M	M	M
Heating elements												
450	Heating element, 100-120V.	M	M	M	M	M	M	M	M	M	M	M
451	Heating element, 200-240V.	M	M	M	M	M	M	M	M	M	M	M
Mounting arrangements												
008	IM 2101 foot/flange mounted, IEC flange, from IM 1001 (B34 from B3).	M	M	M	M	M	NA	NA	NA	NA	NA	NA
009	IM 2001 foot/flange mounted, IEC flange, from IM 1001 (B35 from B3).	M	M	M	M	M	M	M	M	M	M	M
047	IM 3601 flange mounted, IEC flange, from IM 3001 (B14 from B5).	M	M	M	M	M	M	NA	NA	NA	NA	NA
066	Modified for non-standard mounting position (please specify IM xxxx), (must be ordered for all mounting arrangements exluding IM B3 (1001) and IM B5 (3001).	M	M	M	M	M	M	M	M	M	M	M
Painting												
111	Offshore two-pack polyamide cured epoxy paint 160 µm.	M	M	M	M	M	M	M	M	M	M	M
114	Special paint colour, standard grade.	M	M	M	M	M	M	M	M	M	M	M

[1] Certain variant codes cannot be used simultaneously.

S = Included as standard.
M = On modification of a stocked motor, or on new manufacture, the number per order may be limited.

P = New manufacture only.
R = On request.
NA = Not applicable

6

Code [1] / Variant		71	80	90	100	112	132	160	180	200	225	250
Protection												
005	Metal protective roof, vertical motor, shaft down.	M	M	M	M	M	M	R	R	R	R	R
157	Terminal box degree of protection IP65.	R	R	R	R	R	R	R	R	R	R	R
158	Degree of protection IP65.	M	M	M	M	M	M	R	R	R	R	R
403	Degree of protection IP56.	M	M	M	M	M	M	R	R	R	R	R
404	Degree of protection IP56, without fan and fan cover	NA	NA	NA	NA	NA	NA	P	P	P	P	P
Rating & instruction plates												
002	Restamping voltage, frequency and output, continuous duty.	M	M	M	M	M	M	R	R	R	R	R
135	Mounting of additional identification plate, stainless.	M	M	M	M	M	M	M	M	M	M	M
139	Additional identification plate delivered loose.	M	M	M	M	M	M	M	M	M	M	M
161	Additional rating plate delivered loose.	M	M	M	M	M	M	M	M	M	M	M
Standards and Regulations												
421	VIK design (Verband der Industriellen Energie- und Kraftwirtschaft e.V.).	M	M	M	M	M	M	R	R	R	R	R
775	Design according to SHELL DEP 33.66.05.31-Gen. January 1999 design.	M	M	M	M	M	M	R	R	R	R	R
Stator winding temperature sensors												
435	PTC - thermistors (3 in series), 130ºC, in stator winding.	M	M	M	M	M	M	M	M	M	M	M
436	PTC - thermistors (3 in series), 150ºC, in stator winding.	S	S	S	S	S	S	S	S	S	S	S
439	PTC - thermistors (2x3 in series), 150ºC, in stator winding.	M	M	M	M	M	M	M	M	M	M	M
441	PTC - thermistors (3 in series, 130ºC & 3 in series, 150ºC), in stator winding.	NA	NA	NA	NA	NA	NA	NA	NA	NA	NA	NA
Terminal box												
400	4 x 90 degr turnable terminal box	S	S	S	S	S	S	S	S	S	S	S
468	Cable entry from D-end.	M	M	M	M	M	M	M	M	M	M	M
469	Cable entry from N-end.	M	M	M	M	M	M	M	M	M	M	M
736	Standard cable gland EEx e acc. to EN-Standards	S	S	S	S	S	S	S	S	S	S	S
Testing												
140	Test confirmation	M	M	M	M	M	M	M	M	M	M	M
145	Type test report from a catalogue motor, 400V 50Hz.	M	M	M	M	M	M	M	M	M	M	M
148	Routine test report.	M	M	M	M	M	M	M	M	M	M	M

6

[1] Certain variant codes cannot be used simultaneously.

S = Included as standard.
M = On modification of a stocked motor, or on new manufacture, the number per order may be limited.

P = New manufacture only.
R = On request.
NA = Not applicable

Non-sparking motors, aluminum frame

Dimension drawings

Foot-mounted motor IM 1001, IM B3

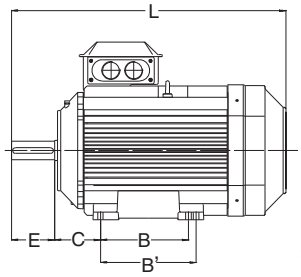

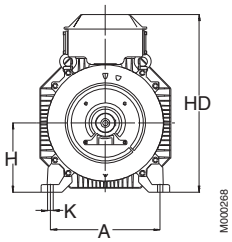

Sizes 90-200

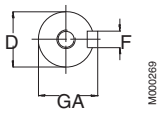

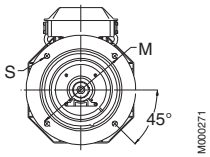

Flange-mounted motor IM 3001, IM B5

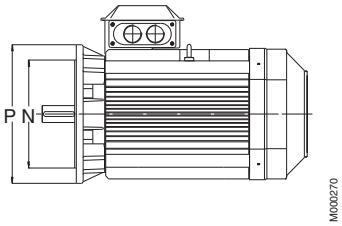

Sizes 225-250

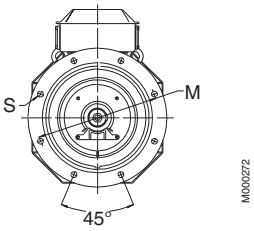

Motor size	IM 1001, IM B3 AND IM 3001, IM B5										IM 1001, IM B3							IM 3001, IM B5			
	D poles		GA poles		F poles		E poles		L max poles		A	B	B'	C	HD	K	H	M	N	P	S
	2	4-8	2	4-8	2	4-8	2	4-8	2	4-8											
M3AAN 90 S	**24**	24	27	27	8	8	50	50	282	282	140	100	–	56	212	10	90	165	130	200	12
90 L	24	24	27	27	8	8	50	50	307	307	140	125	–	56	212	10	90	165	130	200	12
100	28	28	31	31	8	8	60	60	349	349	160	140	–	63	236	12	100	215	180	250	15
112	28	28	31	31	8	8	60	60	361	361	190	140	–	70	258	12	112	215	180	250	14.5
132	38	41	41	41	10	10	80	80	447	447	216	140	178	89	295.5	12	132	265	230	300	14.5
M2AA 160	42	42	45	45	12	12	110	110	602.5	602.5	254	210	254	108	370	15	160	300	250	350	19
180 M	48	48	51.5	51.5	14	14	110	110	602.5	602.5	279	241	279	121	390	15	180	300	250	350	19
180 L	48	48	51.5	51.5	14	14	110	110	643.5	643.5	279	241	279	121	390	15	180	300	250	350	19
200 LA	55	55	59	59	16	16	110	110	711.5	711.5	318	267	305	133	425	18	200	350	300	400	19
200 L 2-4	55	55	59	59	16	16	110	110	732	732	318	267	305	133	425	18	200	350	300	400	19
225 M	55	65	59	64	16	18	110	140	773	843	356	286 [1)]	311	149	525.5	18	225	400	350	450	19
225 S	–	60	–	64	–	18	–	140	–	803	356	286	311 [1)]	149	525.5	18	225	400	350	450	19
250 M	60	65	64	69	18	18	140	140	866	866	406	311 [1)]	349	168	571	22	250	500	450	550	19
M3AA 160 M/MA 2-8, L 2-6, LB 2-4	42	42	45	45	12	12	110	110	602.5	602.5	254	210	254	108	370	15	160	300	250	350	19
160 L 8, LB 6-8	42	42	45	45	12	12	110	110	643.5	643.5	254	210	254	108	370	15	160	300	250	350	19
180 M 2-4,L 6-8,LB 2	48	48	51.5	51.5	14	14	110	110	680	680	279	241	279	121	405	15	180	300	250	350	19
180 L 4, LB 4-8	48	48	51.5	51.5	14	14	110	110	700.5	700.5	279	241	279	121	405	15	180	300	250	350	19
200 MLD-2,-C 4	55	55	59	59	16	16	110	110	814	814	318	267	305	133	533	18	200	350	300	400	19
200 all exc. above	55	55	59	59	16	16	110	110	774	774	318	267	305	133	533	18	200	350	300	400	19
225 SMB, -C	55	55	59	59	16	16	110	110	836	836	356	286	311	149	578	18	225	400	350	450	19
225 SMA,-B,-C	60	60	64	64	18	18	140	140	866	891	356	286	311	149	578	18	225	400	350	450	19
225 SMD	55	60	59	64	16	18	110	140	861	891	356	286	311	149	578	18	225	400	350	450	19
250 SMA,-B	60	65	64	69	18	18	140	140	875	875	406	311	349	168	626	22	250	500	450	550	19
250 SMC	60	65	64	69	18	18	140	140	900	900	406	311	349	168	626	22	250	500	450	550	19
280 SMA	65	75	69	79.5	18	20	140	140	875	875	457	368	419	190	656	24	280	500	450	550	19
280 SMB	65	75	69	79.5	18	20	140	140	900	900	457	368	419	190	656	24	280	500	450	550	19
280 SMB	65	75	69	79.5	18	20	140	140	900	900	457	368	419	190	656	24	280	500	450	550	19

IM 3601, IM B14

Motor size	M	N	P	S	T
90	115	95	140	M8	3
100	130	100	160	M8	3.5
112	130	110	160	M8	3.5
132	165	130	200	M10	3.5

Tolerances:

A, B	± 0,8
D, DA	ISO k6 < Ø 50mm
	ISO m6 > Ø 50mm
F, FA	ISO h9
H	-0.5
N	ISO j6
C, CA	± 0.8

Above table gives the main dimensions in mm.

For detailed drawings please check our web-site 'www.abb.com/motors&generators' or contact ABB.

6

Non-sparking motors, cast iron frame

Dimension drawings

Foot-mounted motor IM 1001, IM B3 **Flange-mounted motor IM 3001, IM B5**

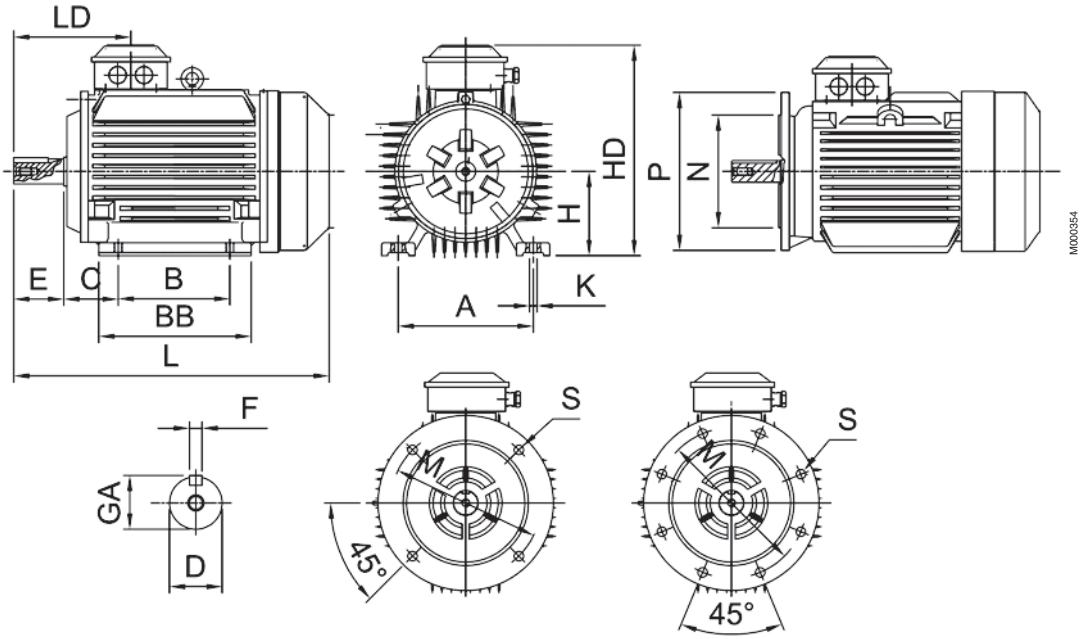

Sizes 71-200 Sizes 225-250

	IM 1001. IM B3 AND IM 3001. IM B5										IM 1001. IM B3						IM 3001. IM B5				
Motor size	D poles		GA poles		F poles		E poles		L max poles		A	B	BB	C	HD	K	H	M	N	P	S
	2	4-8	2	4-8	2	4-8	2	4-8	2	4-8											
71	14	14	16	16	5	5	30	30	255	255	112	90	115	45	200	7	71	130	110	160	10
80	19	19	21.5	21.5	6	6	40	40	285	285	125	100	135	50	230	10	80	165	130	200	12
90 S	24	24	27	27	8	8	50	50	310	310	140	100	140	56	250	10	90	165	130	200	12
90 L	24	24	27	27	8	8	50	50	335	335	140	125	165	56	250	10	90	165	130	200	12
100	28	28	31	31	8	8	60	60	380	380	160	140	180	63	285	12	100	215	180	250	15
112	28	28	31	31	8	8	60	60	395	395	190	140	190	70	310	12	112	215	180	250	15
132 S	38	38	41	41	10	10	80	80	465	465	216	140	205	89	350	12	132	265	230	300	15
132 M	38	38	41	41	10	10	80	80	505	505	216	178	240	89	350	12	132	265	230	300	15
160M	42	42	45	45	12	12	110	110	605	605	254	210	265	108	425	15	160	300	250	350	19
160L	42	42	45	45	12	12	110	110	650	650	254	254	310	108	425	15	160	300	250	350	19
180M	48	48	51.5	51.5	14	14	110	110	680	680	279	241	315	121	465	15	180	300	250	350	19
180L	48	48	51.5	51.5	14	14	110	110	720	720	279	279	350	121	465	15	180	300	250	350	19
200	55	55	59	59	16	16	110	110	775	775	318	305	380	133	510	19	200	350	300	400	19
225S	-	60	-	64	-	18	-	140	-	825	356	286	380	149	560	19	225	400	350	450	19
225M	55	60	59	64	16	18	110	140	820	850	356	311	405	149	560	19	225	400	350	450	19
250	60	65	64	69	18	18	140	140	930	930	406	349	455	168	645	24	250	500	450	550	19

IM 3601, IM B14

Motor size	Flange size	P	M	N	S	T
71	C105	105	85	70	M6	2.5
71	C140	140	115	95	M8	3
80	C120	120	100	80	M6	3
80	C160	160	130	110	M8	3.5
90	C140	140	115	95	M8	3
90	C160	160	130	110	M8	3.5
100, 112	C160	160	130	110	M8	3.5
100, 112	C200	200	165	130	M10	3.5

Tolerances:

A, B	± 0,8	**H**	-0.5
D, DA	ISO k6 < Ø 50mm	**N**	ISO j6
	ISO m6 > Ø 50mm	**C, CA**	± 0.8
F, FA	ISO h9		

Above table gives the main dimensions in mm.

For detailed drawings please check our web-site 'www.abb.com/motors&generators' or contact ABB.

Certificate examples

M000356

1 **ATTESTATION D'EXAMEN CE DE TYPE**

2 **Appareil ou système de protection** destiné à être utilisé en atmosphères explosibles **(Directive 94/9/CE)**

3 Numéro de l'attestation d'examen CE de type
LCIE 05 ATEX 6160

4 Appareil ou système de protection :
Moteur asynchrone
Type : M2GP 71, 80, 100, 112, 132, 160, 180, 200, 225, 250

5 Demandeur : ABB Oy Motors
Adresse : Strömbergin Puistotie 5A
65100 Vaasa Finland

6 Fabricant : ABB Shanghai Motors Co. Ltd
00245

ses variantes
l'annexe de la
descriptifs cités

éférence 0081
e 94/9/CE du
rs 1994, certifie
st conforme aux
santé pour la
de systèmes de
atmosphères
rective.
gurent dans le

sécurité et de
41-0 (2004)
1-1 (2004)

du numéro de
u système de
ales pour une
de la présente

rne uniquement

1 **EC TYPE EXAMINATION CERTIFICATE**

2 **Equipment or protective system** intended for use in potentially explosive atmospheres **(Directive 94/9/EC)**

3 EC type examination certificate number
LCIE 05 ATEX 6160

4 Equipment or protective system :
Asynchronous motor
Type : M2GP 71, 80, 100, 112, 132, 160, 180, 200, 225, 250

5 Applicant : ABB Oy Motors
Address : Strömbergin Puistotie 5A
65100 Vaasa Finland

6 Manufacturer : ABB Shanghai Motors Co. Ltd
Address : No.88 Tiaming Road,
Minhang Zone, Shanghai 200245
P.R. of China

7 This equipment or protective system and any acceptable variation thereto is specified in the schedule to this certificate and the documents therein referred to.

8 LCIE, notified body number 0081 in accordance with article 9 of the Directive 94/9/EC of the European Parliament and the Council of 23 March 1994, certifies that this equipment or protective system has been found to comply with the essential Health and Safety Requirements relating to the design and construction of equipment and protective systems intended for use in potentially explosive atmospheres, given in Annex II to the Directive.
The examination and test results are recorded in confidential report N° 60040659-540604.

9 Compliance with the Essential Health and Safety Requirements has been assured by compliance with :
- EN 60079-0 (2004) - IEC 61241-0 (2004)
- EN 60079-15 (2005) - EN 61241-1 (2004)

10 If the sign X is placed after the certificate number, it indicates that the equipment or protective system is subject to special conditions for safe use specified in the schedule to this certificate.

11 This EC type examination certificate relates only to the

Nemko

Page 1 of 4

[1] TYPE EXAMINATION CERTIFICATE

[2] Equipment Intended for use in Potentially Explosive Atmospheres Directive 94/9/EC

[3] Type Examination Certificate Number: Nemko 04ATEX3449

[4] Equipment: Asynchronous motors

[5] Applicant: ABB Automation Technologies AB
LV Motors

[6] Address: Örjansgränd 10
SE-721 70 Västerås
Sweden

[7] This equipment and any acceptable variation thereto are specified in the schedule to this certificate and the documents therein referred to.

[8] Nemko AS, certifies that this equipment has been found to comply with the Essential Health and Safety Requirements that relate to the design of Category 3 equipment, which is intended for use in potentially explosive atmospheres. These Essential Health and Safety Requirements are given in Annex II to European Union Directive 94/9/EC of 23 March 1994.

[9] The examination and test results are recorded in confidential report no. 22852Ex01-03

[10] Compliance with the Essential Health and Safety Requirements, with the exception of those listed in the schedule of this certificate, has been assessed by reference to:

CENELEC EN 60079-15: 2003
CENELEC EN 50014: 1997 +A1:1999, A2:1999
CENELEC EN 50281-1-1: 1998
IEC 60079-15: 2001
IEC 61241-0:2004
IEC 61241-1:2004
CENELEC EN 61241-1:2004

[11] If the sign "X" is placed after the certificate number, it indicates that the equipment is subject to special conditions for safe use specified in the schedule to this certificate.

[12] This TYPE EXAMINATION CERTIFICATE relates only to the design, examination and tests of the specified equipment or protective system in accordance to the Directive 94/9/EC.
Further requirements of the Directive apply to the manufacturing process and supply of this equipment. These are not covered by this certificate.

[13] The marking of the equipment shall include the following:

II 3 G EEx nA II T3
II 3 D T125°C

Ex tD A22 T125°C

Oslo, 2005-02-11
Rolf Hoel
Certification Department

This certificate and its schedules may only be reproduced in its entirety and without any change

Postal address: P.O.Box 73 Blindern, N-0314 OSLO, NORWAY
Office address: Gaustadalléen 30, 0373 OSLO
Telephone: +47 22 96 03 30
Fax: +47 22 96 05 50
Enterprise number: NO 974404532

M000223

ABB

EC Declaration of Conformity

ABB Oy
Motors
P.O. Box 633
Strömbergin puistotie 5A
FIN - 65101 Vaasa, Finland

3-phase induction motors, series M2BA, M2GP, M3JP, M3KP, M3GP, M3HP and M3LP; as listed on page 2 in this document, are in conformity with provisions of the following Council Directive:

X of 23 March 1994).

es the motors are in conformity with provisions of the following harmonized

9-1 (2004), EN 60079-7 (2003), EN 60079-15 (2005), EN 61241-0 (2006), EN

sions of above standards do not effect the construction of the listed motors, which al Health and Safety Requirements in Annex II of said directive.

for converter supply applications additional requirements must be respected s the installation, as described in the dedicated addendum joined hereafter.

Signed by ----------
Jouni Ikäheimo
Title Product Development Manager
Date February 16th, 2007

ABB Oy

Motors	Visiting Address	Telephone	Internet	Business Identity Code:
Postal address	Strömbergin Puistotie 5 A	+358 10 22 11	www.abb.fi	0763403-0
P.O. Box 633	FI-65320 Vaasa	Telefax	e-mail:	Domicile: Helsinki
FI-65101 Vaasa	FINLAND	+358 10 22 47372	first name.last name	
FINLAND			@fi.abb.com	

M000209

6

Non-sparking motors with aluminum frame in brief, basic design

Motor size		M3AAN 90	100	112	132
Stator	Material	Die-cast aluminum alloy.			
	Surface treatment	Munsell blue 8B 4.5/3.25 / NCS 4822-B05G.			
		Powder coating based on polyster resin, ≥ 30 µm.		Polyester powder paint ≥ 50 µm.	
Feet	Material	Aluminum alloy. Loose feet, bolted to the stator.		Aluminum alloy Integrated with the stator.	
Bearing end shields	Material	Diecast aluminum alloy.			
	Surface treatment	Munsell blue 8B 4.5/3.25 / NCS 4822-B05G.			
		One-component polyester resin powder, ≥ 30 µm.		Polyester powder paint ≥ 50 µm.	
Bearings	D-end 2-pole	6205-2Z/C3	6306-2Z/C3	6206-2Z/C3	6208-2Z/C3
	4-8 pole				
	N-end 2-pole	6204-2Z/C3	6205-2Z/C3	6205-2Z/C3	6206-2Z/C3
	4-8 pole				
Axially-locked bearings	Inner bearing cover	D-end		D-end [1]	
		[1] Foot motor - a spring washer at N-end presses the rotor against D-end. Flange motor - inner bearing cover and spring washer at N-end.			
Bearing seal	D-end	V-ring.			
	N-end	Labyrinth seal.			
Lubrication		Permanently lubricated bearings. Grease for bearing temperatures -40 to +160°C.			
Terminal box	Material	Die-cast aluminum alloy.		Die-cast aluminum alloy, base integrated with stator.	
	Surface treatment	Similar to stator.		Phosphated, polyester paint.	
	Screws	Steel 5G. Galvanised and yellow chromated.			
Connections	Knock-out openings	2 x (M25 + M20)			
	Terminal box	Screw terminal. 6 terminals.		Cable lugs. 6 terminals.	
	Screws	M4		M5	
	Max Cu-area, mm2	6		10	
Fan	Material	Polypropylene. Reinforced with 20% glass fibre.			
Fan cover	Material	Steel sheet.		Polypropylene.	
Stator winding	Material	Copper			
	Impregnation	Polyester vanish. Tropicalised.			
	Insulation class	Insulation class F. Temperature rise class B, unless otherwise stated.			
	Winding protection	Optional.			
Rotor winding	Material	Die-cast aluminum.			
Balancing method		Half key balancing.			
Key ways		Closed key way.			
Heating elements		25 W			
Drain holes		Drain holes with closable plastic plugs. Closed on delivery.			
External earthing bolt		As standard.			
Enclosure		IP 55.			
Cooling method		IC 411.			

Non-sparking motors with aluminum frame in brief, basic design

Motor size			M3AA					
			160	180	200	225	250	280
Stator	Material		Diecast aluminum alloy.		Extruded aluminum alloy.			
	Paint colour shade		Munsell blue 8B 4.5/3.25 / NCS 4822 B05G					
	Paint		Polyester powder paint ≥ 50 µm.					
Feet	Material		Aluminum alloy, integrated with stator.		Aluminum alloy, bolted to the stator. Frame size 250, 2-pole, cast iron.			Cast iron
Bearing end shields	Material		Die-cast aluminum alloy.		Flanged bearing end shields of cast iron, other die-cast aluminum alloy			Cast iron
	Paint colour shade		Munsell blue 8B 4.5/3.25 / NCS 4822 B05G					
	Paint		Polyester powder paint ≥ 50 µm.					
Bearings	D-end	2-pole	6309-2Z/C3	6310-2Z/C3	6312/C3	6313/C3	6315/C3	6315/C3
		4-8 -pole						6316/C3
	N-end	2-pole	6209-2Z/C3	6209-2Z/C3	6210/C3	6212/C3	6213/C3	6213/C3
		4-8 pole						6213/C3
Axially-locked bearings	Inner bearing cover		D-end					
Bearing seal	D-end		V-ring.		Outer and inner V-rings.			
	N-end		Labyrinth seal.		Outer and inner V-rings.			
Lubrication			Permanently lubricated shielded bearings. Grease temp. range -40 to 160°C.		Valve lubrication. Grease for bearing temperatures -40 to +150°C.			
Terminal box	Material		Die-cast aluminum alloy. Base integrated with stator.		Deep-drawn steel sheet, bolted to stator.			
	Surface treatment		Similar to stator.		Phosphated. Polyester paint.			
	Screws		Steel 5G. Galvanised.					
Connections	Knock-out openings		2 x (2 x M40 + M16)					2 x FL21
	Flange-openings				2 x FL 13.2 x M40			2 x M63 1 X M16
	Flange-openings				2 x FL 21.2 x M63 (voltage code S)			
	Terminal box		Cable lugs. 6 terminals.					
	Screws		M6		M10			
	Max Cu-area, mm²		35		70			
Fan	Material		Polypropylene. Reinforced with 20% glass fibre.					
Fan cover	Material		Steel sheet.					
Stator winding	Material		Copper.					
	Impregnation		Polyester varnish. Tropicalised.					
	Insulation class		Insulation class F. Temperature rise class B, unless otherwise stated.					
Stator winding temperature sensors			Optional		PTC-thermistors, 150°C			
Rotor winding			Diecast aluminum.					
Balancing method			Half key balancing.					
Key ways			Closed keyway.					
Heating elements			25 W	50 W				
Drain holes			Drain holes with closable plastic plugs. Closed on delivery.					
Enclosure			IP 55.					
Cooling method			IC 411.					

6

Non-sparking motors with aluminum frame in brief, basic design

Motor size			M2AA				
			160	180	200	225	250
Stator	Material		Die-cast aluminum alloy.			Extruded aluminum alloy.	
	Paint colour shade		Munsell blue 8B 4.5/3.25 / NCS 4822-B05G.				
	Paint		Polyester powder paint ≥ 50 µm.				
Feet	Material		Aluminum alloy, Integrated with the stator.	Cast iron bolted to the stator.			
Bearing end shields	Material		Die-cast aluminum alloy.	Flanged bearing end shields of cast iron, others diecast aluminum.			
	Paint colour shade		Munsell blue 8B 4.5/3.25 / NCS 4822-B05G.				
	Paint		Polyester powder paint ≥ 50 µm.				
Bearings	D-end	2-8 pole	6309-2Z/C3	6310-2Z/C3	6312/C3	6313/C3	6315/C3
	N-end	2-8 pole	6209-2Z/C3	6209-2Z/C3	6209-2Z/C3	6210/C3	6212/C3
Axially-locked bearings	Inner bearing cover		D-end				
Bearing seal	D-end		V-ring.			Outer and inner V-rings.	
	N-end		Labyrinth seal.			Outer and inner V-rings.	
Lubrication			Permanently lubricated bearings. Grease for bear. temp. -40 to +160°C.			Valve lubrication. Grease temp. range -40 to 150°C.	
Terminal box	Material		Die-cast aluminum alloy, base integrated with stator.			Deep-drawn steel sheet, bolted to stator.	
	Surface treatment		Similar to stator.			Phosphated. Polyester paint.	
	Screws		Steel 5G. Galvanised.				
Connections	Knock-out openings		2 x (2 x M40 + M16)				
	Flange-openings					2 x FL 13.2 x M40	
	Flange-openings					2 x FL 21.2 x M63 (for voltage code S)	
	Terminal box		Cable lugs, 6 terminals.				
	Screws		M6			M10	
	Max Cu-area, mm^2		35			70	
Fan	Material		Polypropylene. Reinforced with 20% glass fibre.				
Fan cover	Material		Steel sheet. Phosphated. Polyester paint.				
Stator winding	Material		Copper.				
	Impregnation		Polyester varnish. Tropicalised.				
	Insulation class		Insulation class F. Temperature rise class B, unless otherwise stated.				
Stator winding temp. sensors			Optional			PTC-thermistors, 150°C	
Rotor winding	Material		Diecast aluminum.				
Balancing method			Half key balancing.				
Key ways			Closed keyway.				
Heating elements			25 W	50 W			
Drain holes			Drain holes with closable plastic plugs, Closed on delivery.				
Enclosure			IP 55.				
Cooling method			IC 411.				

General purpose Non-sparking motors with cast iron frame in brief, basic design

Motor size		71	80	90	100	112	132
Stator	Material	Cast iron HT150 GB/T 9439					
	Paint colour shade	Blue, Munsell 8B 4.5/3.25 / NCS 4822 B05G					
	Paint	Two-pack 821 acid polyurethane enamel, thickness ≥ 80 µm.					
Bearing end shields	Material	Cast iron HT150 GB/T 9439					
	Paint colour shade	Blue, Munsell 8B 4.5/3.25 / NCS 4822 B05G					
	Paint	Two-pack 821 acid polyurethane enamel, thickness ≥ 80 µm.					
Bearings	D-end	6202 WC3	6204 DDU C3	6205 DDU C3	6206 DDU C3	6207 DDU C3	6208 DDU C3
	N-end	6202 WC3	6204 DDU C3	6205 DDU C3	6206 DDU C3	6206 DDU C3	6207 DDU C3
Axially-locked bearings	Inner bearing cover	Stop ring locked at D-end					
Bearing seal		Gamma ring as standard, radial seal on request					
Lubrication		Permanent grease lubrication.					
SPM-nipples		–					
Rating plate	Material	Stainless steel 0.80 Cr 18 Ni9					
Terminal box	Frame material	Cast iron HT150 GB/T 9439					
	Cover material	Cast iron HT150 GB/T 9439					
	Screws	Steel 8.8, zinc-plated and passivated					
Connections	Cable entries	1xM20x1.5 + 1xM16x1.5	1xM25x1.5 + 1xM16x1.5		1xM32x1.5 + 1xM16x1.5		
	Terminals	6 terminals for connection with cable lugs (not included)					
Fan	Material	Reinforced glass fiber					
Fan cover	Material	Steel					
	Paint colour shade	Blue, Munsell 8B 4.5/3.25 / NCS 4822 B05G					
	Paint	Two-pack 821 acid polyurethane enamel, thickness ≥ 80 µm.					
Stator winding	Material	Copper					
	Insulation	Insulation class F					
	Winding protection	3 PTC thermistors 150°C as standard					
Rotor winding	Material	Pressure die-cast aluminum					
Balancing method		Half key balancing					
Key ways		Open key way					
Heating elements	Optional	10 W	20 W		30 W		40 W
Drain holes		Optional					
External earthing bolt		As standard					
Enclosure		IP 55, higher protection on request					
Cooling method		IC 411					

General purpose Non-sparking motors with cast iron frame in brief, basic design

Motor size		160	180	200	225	250
Stator	Material	Cast iron HT150 GB/T 9439				
	Paint colour shade	Blue, Munsell 8B 4.5/3.25 / NCS 4822 B05G				
	Paint	Two-pack 821 acid polyurethane enamel, thickness ≥ 80 µm.				
Bearing end shields	Material	Cast iron HT150 GB/T 9439				Cast iron HT200 GB/T 9439 except vertical mounted
	Paint colour shade	Blue, Munsell 8B 4.5/3.25 / NCS 4822 B05G				
	Paint	Two-pack 821 acid polyurethane enamel, thickness ≥ 80 µm.				
Bearings	D-end	6309/C3	6310/C3	6312/C3	6313/C3	6314/C3
	N-end	6209/C3	6210/C3	6212/C3	6213/C3	6214/C3
Axially-locked bearings	Inner bearing cover	Inner bearing cover locked at D-end				
Bearing seal		Gamma-ring as standard, radial seal on request				
Lubrication		Regreasable bearings as standard, lifetime lubrication as option				
SPM-nipples		As standard				
Rating plate	Material	Stainless steel 0.80 Crt8Ni9				
Terminal box	Frame material	Cast iron HT150 GB/T 9439				Cast iron HT200 GB/T 9439
	Cover material	Cast iron HT150 GB/T 9439				Cast iron HT200 GB/T 9439
	Screws	Steel 8.8, zinc-plated and passivated				
Connections	Cable entries	2xM40x1.5 + 1xM16x1.5		2xM50x1.5 + 1xM16x1.5		2xM63x1.5 + 1xM16x1.5
	Terminals	6 terminals for connection with cable lugs (not included)				
Fan	Material	Reinforced glass fiber				
Fan cover	Material	Steel				
	Paint colour shade	Blue, Munsell 8B 4.5/3.25 / NCS 4822 B05G				
	Paint	Two-pack 821 acid polyurethane enamel, thickness ≥ 80 µm.				
Stator winding	Material	Copper				
	Insulation	Insulation class F				
	Winding protection	3 PTC thermistors 150°C as standard				
Rotor winding	Material	Pressure die-cast aluminum				
Balancing method		Half key balancing				
Key ways		Closed key-way				
Heating elements	Optional	40 W	50 W		60 W	
Drain holes		As standard, open on delivery				
External earthing bolt		As standard				
Enclosure		IP 55, higher protection as standard				
Cooling method		IC 411				

Dust ignition proof motors / Protection by enclosure

Totally enclosed squirrel cage three phase low voltage motors, Sizes 71 - 400, 0.25 to 710 kW

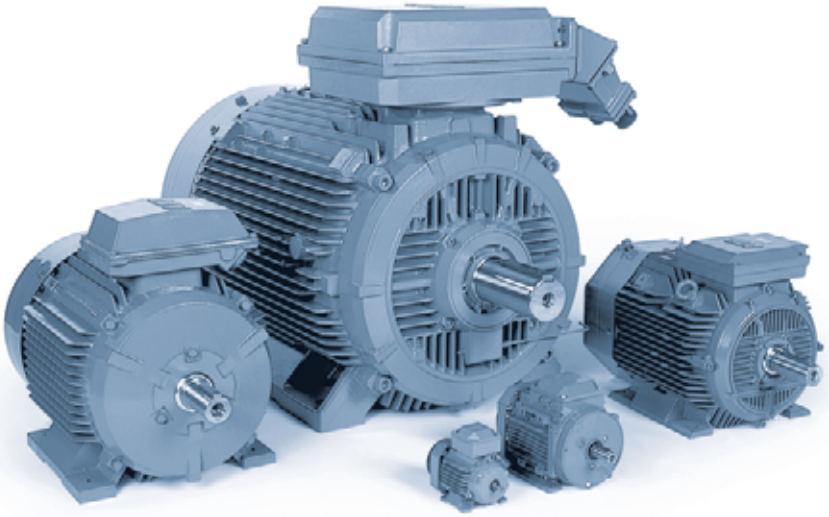

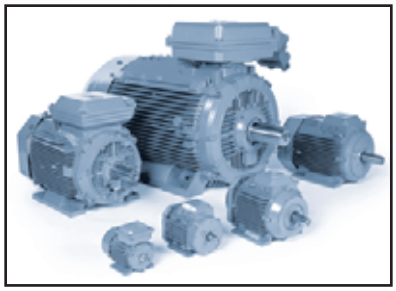

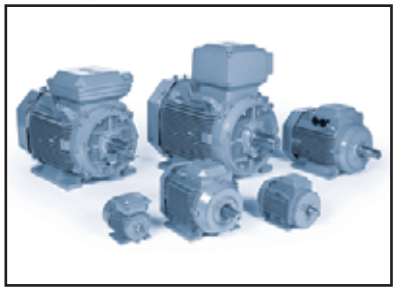

www.abb.com/motors&generators

> Motors

>> Motors and Generators for Hazardous Areas

Mechanical design.....144

Ordering information.....147

Technical data.....148

Rating plates.....164

Variant codes.....165

Dimension drawings.....185

Dust ignition proof motors in brief....190

7

Motors for dust ignition protection (DIP/Ex tD)

Terminal boxes

The terminal boxes of the dust ignition proof motors comply with the requirements of the standards for this type and have the same IP protection as the motors. Furthermore they prevent all ignition sources such as sparks, excessive overheating etc., and are equipped with no self-loosening terminals.

Terminal boxes are mounted on the top of the basic motor versions. The terminal box is either rotatable or at least allows cable entry from either side which gives a choice of connection possibilities.

Aluminum motors
In sizes 71 to 180 the terminal box is made of aluminum, the bottom section is integrated with the stator and provided with two openings on both sides. Cable glands are not supplied.

In sizes 200 to 280 the terminal box and cover are made of deep drawn steel, bolted to the stator. The terminal box is provided with two flange openings, one on each side. Cable glands are not supplied.

Cast iron motors
The terminal boxes in motors 71-132 and 200-250 are 4x90° turnable as standard, in motor sizes 160 to 180 and 280-400 as standard 2x180° and as easy option 4x90°.

In sizes 80-132 the motors are provided with cast iron terminal boxes with tapped cable entry holes on one side. Cable glands can be provided on request, see variant codes. In frame sizes 160-250 the terminal box has two main metric cable entries; both are equipped with cable glands of closed type. In frame sizes 280-400 the terminal box is equipped with cable glands, if metric, or cable glands as standard.

Cable entries and cable glands

Cast iron motors up to size 132 are delivered without cable glands but are delivered with threaded cable entries suitable for the following cable gland sizes.

In cast iron motor sizes 160 to 400 the terminal box is equipped with cable glands or cable boxes as standard.

Aluminum motors are delivered without cable glands and knock-out openings as standard.

Cable glands for dust ignition proof motors are a very important equipment. To ensure that they are correctly dimensioned according to the cables used, we recommend that the installator of the motors supplies them.

Motor sizes 71-280 with aluminum frame

Motor size	Opening	Metric cable entry	Cable diameter mm, min-max	Max.connection cable area mm²	Terminal bolt size	Terminal screw size
90-100	Knockout opening	2x(2xM25+M20)	2x(2xD11-16)	6		M4
112-132	Knockout opening	2x(M25+M20)	2x(D11-16+D9-13)	10	M5	
160-180	Knockout opening	2x(2xM40+M16)	2x(2xD19-27+D5-9)	35	M6	
200 [1]	Knockout opening	1x(2xM40+M16)	1x(2xD19-27+D5-9)	35	M6	
200-250 [2]	2 x FL 13	1x(2xM40+M16)	1x(2xD32-42+D5-9)	70	M10	
200-250 [3]	2 x FL 21	1x(2xM63+M16)	1x(2xD32-42+D5-9)	70	M10	
280	2 x FL 21	1x(2xM63+M16)	1x(2xD32-42+D5-9)	70	M10	

[1] M2AA
[2] M3AA/M2AA; M2AA 200 excluded. M3AAD with voltage code D.
[3] M3AAD with voltage code S.

7

Motor sizes 80-400 with cast iron frame

Motor size	Main cable entries						Auxiliary cable entries		
	Thread	Cable gland	Metal plug	Single core cross-section[1] mm²	Terminal bolt size 6 x	Outer cable shealth mm	Thread	Cable gland	Outer cable shealth mm
80-90	1xM25	(1x)M25x1.5	-	10	M5	10-16	1xM20x1.5	1xM20x1.5	8-14
100-132	2xM32	(2x)M32x1.5	-	10	M5	16-21	1xM20x1.5	1xM20x1.5	8-14
160-180	2xM40	(2x)M40x1.5	-	35	M6	18-27	2xM20x1.5	2xM20x1.5	8-14
200-250	2xM50	(2x)M50x1.5	-	70	M10	26-35	2xM20x1.5	2xM20x1.5	8-14
280-400	See tables on next pages						2xM20x1.5	2xM20x1.5	8-14

[1] Max. size maybe bigger, but depends on the used cable lug. Clearances must be acc. to Ex-standards

Cast iron motor sizes 280-400 – Co-ordination of terminal boxes and cable entries

Motor sizes	Voltage/ freq. code	Ter-minal box	Top-mounted Flange or adapter	Side-mounted Flange or adapter	Cable box or cable gland	Gland thread	Cable diameter	Max.conn cable area mm²
3000 r/min (2 poles)								
280		210	3GZF294730-749	3GZF294730-749	2x 3GZF294730-613	**2x M63x1.5**	2x Ø32-49	2x150
315SM, ML		370	3GZF294730-753	3GZF294730-753	2x 3GZF294730-613	**2x M63x1.5**	2x Ø32-49	2x240
315LKA, LKB		370	3GZF294730-753	3GZF294730-753	2x 3GZF294730-613	**2x M63x1.5**	2x Ø32-49	2x240
315LKC		750	3GZF294730-944	3GZF294730-759	3GZF294730-301		2x Ø48-60	4x240
355 SMA	D	750	3GZF294730-944	3GZF294730-759	3GZF294730-301		2x Ø48-60	4x240
355 SMA	E	370	3GZF294730-753	3GZF294730-753	2x 3GZF294730-613	**2x M63x1.5**	2x Ø32-49	2x240
355 SMB, SMC		750	3GZF294730-944	3GZF294730-759	3GZF294730-301		2x Ø48-60	4x240
355 ML, LK		750	3GZF294730-944	3GZF294730-759	3GZF294730-501		2x Ø60-80	4x240
400 L, LK		750	3GZF294730-944	3GZF294730-759	3GZF294730-501		2x Ø60-80	4x240
1500 r/min (4 poles)								
280		210	3GZF294730-749	3GZF294730-749	2x 3GZF294730-613	**2x M63x1.5**	2x Ø32-49	2x150
315SM, ML		370	3GZF294730-753	3GZF294730-753	2x 3GZF294730-613	**2x M63x1.5**	2x Ø32-49	2x240
315LKA, LKB		370	3GZF294730-753	3GZF294730-753	2x 3GZF294730-613	**2x M63x1.5**	2x Ø32-49	2x240
315LKC		750	3GZF294730-944	3GZF294730-759	3GZF294730-301		2x Ø48-60	4x240
355 SMA	D	750	3GZF294730-944	3GZF294730-759	3GZF294730-301		2x Ø48-60	4x240
355 SMA	E	370	3GZF294730-753	3GZF294730-753	2x 3GZF294730-613	**2x M63x1.5**	2x Ø32-49	2x240
355 SMB, SMC		750	3GZF294730-944	3GZF294730-759	3GZF294730-301		2x Ø48-60	4x240
355 ML, LK		750	3GZF294730-944	3GZF294730-759	3GZF294730-501		2x Ø60-80	4x240
400 L, LK		750	3GZF294730-944	3GZF294730-759	3GZF294730-501		2x Ø60-80	4x240
1000 r/min (6 poles)								
280		210	3GZF294730-749	3GZF294730-749	2x 3GZF294730-613	**2x M63x1.5**	2x Ø32-49	2x150
315		370	3GZF294730-753	3GZF294730-753	2x 3GZF294730-613	**2x M63x1.5**	2x Ø32-49	2x240
355 SMA, SMB		370	3GZF294730-753	3GZF294730-753	2x 3GZF294730-613	**2x M63x1.5**	2x Ø32-49	2x240
355 SMC	D	750	3GZF294730-944	3GZF294730-759	3GZF294730-301		2x Ø48-60	4x240
355 SMC	E	370	3GZF294730-753	3GZF294730-753	2x 3GZF294730-613	**2x M63x1.5**	2x Ø32-49	2x240
355 ML		750	3GZF294730-944	3GZF294730-759	3GZF294730-301		2x Ø48-60	4x240
355 LKA		750	3GZF294730-944	3GZF294730-759	3GZF294730-301		2x Ø48-60	4x240
355 LKB		750	3GZF294730-944	3GZF294730-759	3GZF294730-501		2x Ø60-80	4x240
400 L, LK		750	3GZF294730-944	3GZF294730-759	3GZF294730-501		2x Ø60-80	4x240
750 r/min (8 poles)								
280		210	3GZF294730-749	3GZF294730-749	2x 3GZF294730-613	**2x M63x1.5**	2x Ø32-49	2x150
315		370	3GZF294730-753	3GZF294730-753	2x 3GZF294730-613	**2x M63x1.5**	2x Ø32-49	2x240
355 SM		370	3GZF294730-753	3GZF294730-753	2x 3GZF294730-613	**2x M63x1.5**	2x Ø32-49	2x240
355 ML	D	750	3GZF294730-944	3GZF294730-759	3GZF294730-301		2x Ø48-60	4x240
355 ML	E	370	3GZF294730-753	3GZF294730-753	2x 3GZF294730-613	**2x M63x1.5**	2x Ø32-49	2x240
355 LK		750	3GZF294730-944	3GZF294730-759	3GZF294730-301		2x Ø48-60	4x240
400 LA, LB, LKA, LKB		750	3GZF294730-944	3GZF294730-759	3GZF294730-301		2x Ø48-60	4x240
400 LC, LKC		750	3GZF294730-944	3GZF294730-759	3GZF294730-301		2x Ø48-60	4x240

Voltage/frequency codes:
D = 380-420 VD 50 Hz, 660/690 VY 50 Hz, 440-480 VD 60 Hz
E = 500 VD 50 Hz, 575 VD 60 Hz

Terminal bolt sizes M12.

7

M3GP 280 - 315

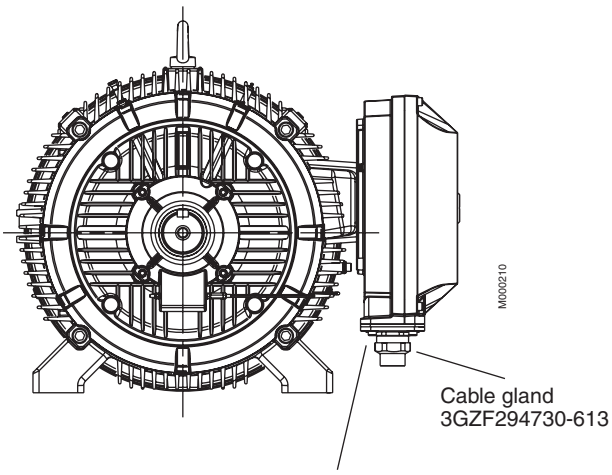

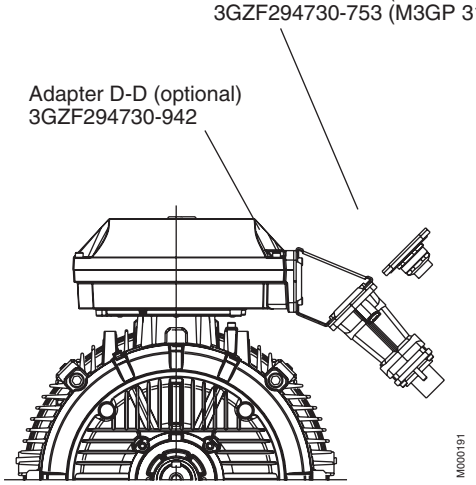

M3GP 355 - 400

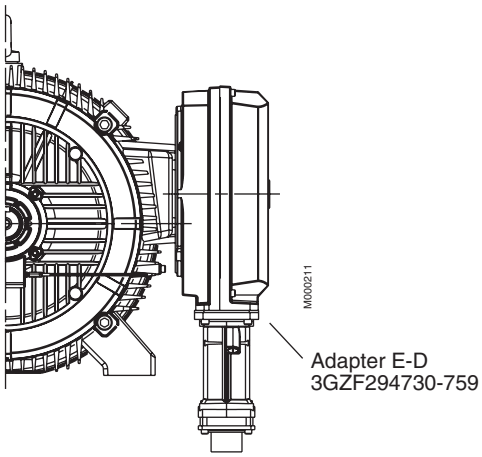

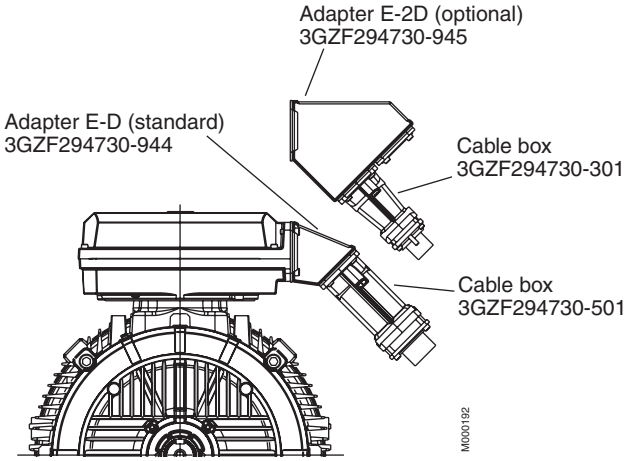

Auxiliary devices (view from N-end)

Cable glands for auxiliary devices
as standard 2 x M20 x 1.5.

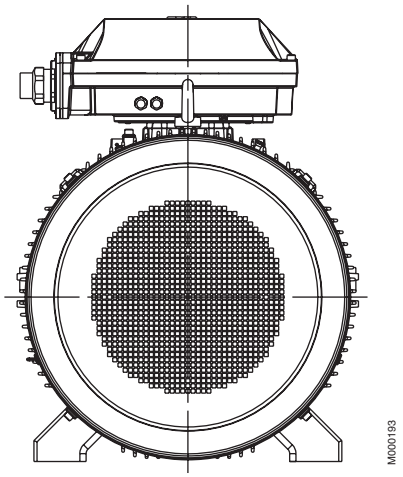

Dimensions for terminal box inlets

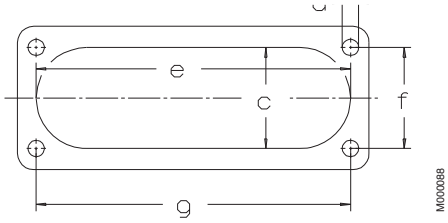

Inlet	c	e	f	g	d
C	62	193	62	193	M8
D	100	300	80	292	M10
E	115	370	100	360	M12

Ordering information

Sample order

When placing an order, please state the following minimum data in the order, as in example.

The product code of the motor is composed in accordance with the following example.

Motor type	M3GP 160 MLA
Pole number	2
Mounting arrangement (IM code)	IM B3 (IM 1001)
Rated output	11 kW
Product code	3GBP161410-ADG
Variant codes if needed	

Motor size

A	B	C	D, E, F, G
M3GP	160 MLA	3GGP 161 410-	A D G 003 etc.

1 2 3 4 5 6 7 8 9 10 11 12 13 14

A Motor type
B Motor size
C Product code
- **D** Mounting arrangement code
- **E** Voltage and frequency code
- **F** Generation code

G Variant codes

Explanation of the product code:

Positions 1 to 4
3GAA = Totally enclosed fan cooled squirrel cage motor with aluminum frame, dust ignition proof
3GBA/3GGP = Totally enclosed fan cooled squirrel cage motor with cast iron frame, dust ignition proof

Positions 5 and 6
IEC-frame

07 = 71	**13** = 132	**25** = 250
08 = 80	**16** = 160	**28** = 280
09 = 90	**18** = 180	**31** = 315
10 = 100	**20** = 200	**35** = 355
11 = 112	**22** = 225	

Position 7
Speed (Pole pairs)
1 = 2 poles
2 = 4 poles
3 = 6 poles
4 = 8 poles
5 = 10 poles

Position 8 to 10
Serial number

Position 11
- (dash)

Position 12
Mounting arrangement
A = Foot-mounted, top-mounted terminal box
R = Foot-mounted, terminal box RHS seen from D-end
L = Foot-mounted, terminal box LHS seen from D-end
B = Flange-mounted, large flange
C = Flange-mounted, small flange (sizes 71 to 112)
H = Foot- and flange-mounted, terminal box top-mounted
J = Foot- and flange-mounted, small flange with tapped holes
S = Foot- and flange-mounted, terminal box RHS seen from D-end
T = Foot- and flange-mounted, terminal box LHS seen from D-end
V = Flange-mounted, special flange
F = Foot- and flange-mounted. Special flange

Position 13
Voltage and frequency code
See table below

Position 14
Generation code
A, B, C...

The product code must be, if needed, followed by variant codes.

Code letters for supplementing the product code - aluminum motors

Motor size	Code letter for voltage and frequency Direct start or, with Δ-connection, also Y/Δ-start S 50 Hz	60 Hz	D 50 Hz	60 Hz	H 50 Hz	E 50 Hz	F 50 Hz	T 50 Hz	U 50 Hz	X
56-100	220-240 VΔ 380-420 VY	440-480 VY	380-420 VΔ 660-690 VY	440-480 VΔ -	-	500 VΔ[1)]	500 VY	660 VΔ[1)]	690 VΔ[1)]	Other rated voltage, connection or frequency, 690 V maximum
112-132	220-240 VΔ 380-420 VY	- 440-480 VY	380-420 VΔ 660-690 VY	440-480 VΔ -	415 VΔ	500 VΔ	500 VY	660 VΔ	690 VΔ	
M2AA 160-250	230 VΔ 400 VY	- -	400 VΔ 690 VY	- -	-	500VΔ	-	-	-	
M3AA 160-280	220, 230 VΔ 380,400,415 VY	- 440 VY	380,400,415VΔ 660, 690 VY	440 VΔ -	415 VΔ	500 VΔ	500 VY	660 VΔ	690 VΔ	

[1)] On request.
NOTE: By frame sizes 90-100 and Category 2 for frame sizes 112-280 max. 500 V.

Code letters for supplementing the product code - cast iron motors

Code letter for voltage and frequency
Direct start or, with Δ-connection, also Y/Δ-start

Motor size	S 50Hz	60 Hz	D 50 Hz	60 Hz	H 50 Hz	E 50 Hz	60 Hz	F 50 Hz	T 50 Hz	U 50 Hz	X
71-132	220-240 VΔ 380-420 VY	440-480 VY -	380-420 VΔ 660-690 VY	440-480VΔ -	415 VΔ -	500 VΔ -	575 VΔ -	500 VY -	660 VΔ -	690 VΔ -	Other rated voltage, connection or frequency, 690 V maximum
160-355	220, 230 VΔ 380,400,415VY	- 440VY	380, 400, 415 VΔ 660, 690 VY	440VΔ -	415 VΔ -	500 VΔ -	- -	500 VY -	660 VΔ -	690 VΔ -	

7

Dust ignition proof motors 56-280

Technical data for Category 2 D - T = 125°C - IP 65 - aluminum motors

IC 411; Insulation class F. temperature rise class B

Output kW 50 Hz	Motor type			Product code	Speed r/min	Efficiency at FL 100%	Efficiency at FL 75%	Power factor cos φ	Current I_N A	Current I_s/I_N	Torque T_N Nm	Torque T_s/T_N	Torque T_{max}/T_N	Moment of inertia J = 1/4 GD² kgm²	Weight kg	Sound pressure level L_p dB(A)
3000 r/min = 2-poles				**400 V 50 Hz**									**Basic design**			
0.37	**M2VAD**	**71**	**A**	3GVA 071 001-••C	2840	77.1	76.5	0.72	1	5.5	1.25	3.8	3.9	0.0004	5.5	58
0.55	**M2VAD**	**71**	**B**	3GVA 071 002-••C	2830	79.2	78.2	0.76	1.35	5.7	1.86	3.6	3.7	0.00045	6.5	58
0.75	**M2VAD**	**80**	**A**	3GVA 081 001-••B	2870	81.2	79.3	0.75	1.8	6.2	2.49	2.9	3.6	0.000722	9	60
1.1	**M2VAD**	**80**	**B**	3GVA 081 002-••B	2850	81.4	79.5	0.78	2.5	6.1	3.69	2.3	3.5	0.000763	11	60
1.5	**M3AAD**	**90**	**S**	3GAA 091 001-••E	2870	80.1	76.2	0.82	3.35	5.5	5	2.4	3.0	0.0019	13	63
2.2	**M3AAD**	**90**	**L**	3GAA 091 002-••E	2880	83.6	79.0	0.87	4.37	7.0	7.5	2.7	3.0	0.0024	16	63
3	**M3AAD**	**100**	**L**	3GAA 101 001-••E	2900	86.0	84.1	0.88	5.95	7.5	10	2.7	3.6	0.0041	21	65
4	**M3AAD**	**112**	**M**	3GAA 111 001-••B	2850	86.0	86.2	0.91	7.4	7.5	13.4	2.8	3.0	0.01	25	63
5.5	**M3AAD**	**132**	**SA**	3GAA 131 001-••B	2855	86.0	86.6	0.88	10.5	7.8	18.4	3.2	3.4	0.014	37	75
7.5	**M3AAD**	**132**	**SB**	3GAA 131 002-••B	2860	88.0	86.2	0.89	13.9	8.5	25.1	3.4	3.6	0.016	42	73
11	**M2AA**	**160**	**MA**	3GAA 161 111-••A	2915	88.4	88.9	0.89	20.5	6.1	36	2.1	2.5	0.039	73	73
11	**M3AA**	**160**	**MA**	3GAA 161 101-••C	2930	91.0	91.2	0.88	20	6.2	36	2.1	2.8	0.039	73	69
15	**M2AA**	**160**	**M**	3GAA 161 112-••A	2900	89.5	89.9	0.90	27	6.1	49.4	2.4	2.6	0.047	84	75
15	**M3AA**	**160**	**M**	3GAA 161 102-••C	2920	91.3	91.7	0.90	26.5	6.4	49	2.3	2.7	0.047	84	69
18.5	**M2AA**	**160**	**L**	3GAA 161 113-••A	2915	90.4	90.7	0.91	32.5	6.8	61	2.6	3.0	0.053	94	73
18.5	**M3AA**	**160**	**L**	3GAA 161 103-••C	2920	92.4	93.1	0.91	32	7.2	61	2.6	2.9	0.053	94	69
22	**M2AA**	**180**	**M**	3GAA 181 111-••A	2925	91.5	91.7	0.89	39	8.0	72	2.8	3.2	0.06	108	75
22	**M3AA**	**180**	**M**	3GAA 181 101-••C	2930	92.8	93.3	0.89	38.5	7.2	71	2.7	3.0	0.077	119	69
30	**M2AA**	**200**	**LA**	3GAA 201 011-••A	2945	92.0	92.0	0.88	53	7.9	97	3.0	3.7	0.094	139	75
30	**M3AA**	**200**	**MLA**	3GAA 201 001-••C	2955	93.2	93.2	0.88	53	8.5	97	2.9	3.1	0.15	175	72
37	**M2AA**	**200**	**L**	3GAA 201 012-••A	2945	92.8	92.9	0.89	65	8.2	120	3.1	3.6	0.115	170	75
37	**M3AA**	**200**	**MLB**	3GAA 201 002-••C	2950	93.6	93.7	0.89	64	7.2	120	2.3	2.9	0.18	200	72
45	**M2AA**	**225**	**M**	3GAA 221 011-••A	2940	93.0	93.0	0.88	80	7.7	146	2.8	3.0	0.21	209	75
45	**M3AA**	**225**	**SMB**	3GAA 221 001-••C	2960	94.1	93.9	0.88	79	7.7	145	2.5	2.9	0.26	235	74
55	**M2AA**	**250**	**M**	3GAA 251 011-••A	2960	93.5	93.8	0.90	95	7.3	177	2.8	3.0	0.31	277	74
55	**M3AA**	**250**	**SMA**	3GAA 251 001-••C	2970	94.2	93.8	0.89	95	7.9	177	2.4	3.0	0.49	285	75
75	**M3AA**	**280**	**SMA**	3GAA 281 001-••C	2970	94.7	94.4	0.90	127	8.2	241	2.7	3.2	0.57	375	75
3000 r/min = 2-poles				**400 V 50 Hz**									**High-output design**			
0.68	**M2VAD**	**71**	**BB**	3GVA 071 003-••C	2800	78.9	77.4	0.82	1.59	5.2	2.33	3.2	3.3	0.00045	6.5	58
0.75	**M2VAD**	**71**	**BC**	3GVA 071 004-••C	2800	78.5	77.9	0.85	1.7	5.1	2.57	3.1	3.2	0.00045	6.5	58
1.5	**M2VAD**	**80**	**C**	3GVA 081 003-••B	2840	82.4	82.2	0.83	3.16	5.5	5.13	2.8	3.1	0.001093	11.5	60
2.7	[1] **M3AAD**	**90**	**LB**	3GAA 091 003-••E	2860	80.7	83.5	0.86	5.7	7.0	9	2.6	3.0	0.0027	18	68
4	[1] **M3AAD**	**100**	**LB**	3GAA 101 002-••E	2900	85.0	84.3	0.86	8.1	7.5	13	2.7	3.6	0.005	25	68
5.5	[1] **M3AAD**	**112**	**MB**	3GAA 111 002-••B	2855	86.5	87.1	0.93	9.9	7.3	18.4	2.7	2.9	0.012	33	66
9.2	[1] **M3AAD**	**132**	**SBB**	3GAA 131 004-••B	2825	86.0	88.2	0.93	16.6	7.3	31.1	3.2	3.5	0.022	57	74
11	[1] **M3AAD**	**132**	**SC**	3GAA 131 003-••B	2835	87.0	87.4	0.93	19.6	8.0	37	3.2	3.3	0.022	57	73
45	**M3AA**	**200**	**MLC**	3GAA 201 003-••C	2950	94.1	94.5	0.89	78	8.2	146	3.0	3.2	0.19	205	72
55	**M3AA**	**225**	**SMC**	3GAA 221 002-••C	2960	94.5	94.6	0.89	95	7.3	177	2.8	3.0	0.29	260	74
75	**M3AA**	**250**	**SMB**	3GAA 251 002-••C	2970	95.0	94.9	0.90	127	8.6	241	2.7	3.3	0.57	375	75

[1] Temperature rise class F

Note: When ordering motors, the following variant codes have to be added:

acc. to ATEX 453 'DIP/Ex tD acc. to ATEX directive 94/9/EC, T=125°C, cat. 2D, IP65'

acc. to IEC 805 'DIP/Ex tD, IEC 61241, T125°C, IP55 (zone 21)'

The two bullets in the product code indicate choice of mounting arrangement, voltage and frequency (see ordering information.

Motors are certified for the voltages 380-415 VD/660-690 VY 50 Hz and 440 V 60 Hz acc. to IEC 60034-1. Data for other voltages < 690 V on request.

Dust ignition proof motors 56-280

Technical data for Category 2 D - T = 125°C - IP 65 - aluminum motors

IC 411; Insulation class F. temperature rise class B

Output kW 50 Hz	Motor type			Product code	Speed r/min	Efficiency at FL 100%	Efficiency at FL 75%	Power factor cos φ	Current I_N A	Current I_s/I_N	Torque T_N Nm	Torque T_s/T_N	Torque T_{max}/T_N	Moment of inertia J = 1/4 GD² kgm²	Weight kg	Sound pressure level L_p dB(A)
1500 r/min = 4-poles					**400 V 50 Hz**									**Basic design**		
0.25	**M2VAD**	**71**	**A**	3GVA 072 001-••C	1410	70.4	69.1	0.71	0.74	4.3	1.71	2.7	2.9	0.00066	5.5	45
0.37	**M2VAD**	**71**	**B**	3GVA 072 002-••C	1420	74.6	72.1	0.69	1.05	4.4	2.51	2.6	2.8	0.00089	6.5	45
0.55	**M2VAD**	**80**	**A**	3GVA 082 001-••B	1390	75.3	73.1	0.76	1.4	4.6	3.75	2.6	2.9	0.001257	9	50
0.75	**M2VAD**	**80**	**B**	3GVA 082 002-••B	1410	78.2	75.6	0.74	1.9	4.7	5.08	3.5	3.9	0.001565	10.5	50
1.1	**M3AAD**	**90**	**S**	3GAA 092 001-••E	1410	77.5	76.4	0.81	2.59	5.0	7.5	2.2	2.7	0.0032	13	50
1.5	**M3AAD**	**90**	**L**	3GAA 092 002-••E	1420	80.3	78.1	0.79	3.45	5.0	10	2.4	2.9	0.0043	16	50
2.2	**M3AAD**	**100**	**LA**	3GAA 102 001-••E	1430	83.0	82.7	0.81	4.8	5.5	15	2.4	2.9	0.0069	21	64
3	**M3AAD**	**100**	**LB**	3GAA 102 002-••E	1430	85.0	83.9	0.81	6.48	5.5	20	2.5	2.9	0.0082	24	66
4	**M3AAD**	**112**	**M**	3GAA 112 001-••B	1435	84.5	83.9	0.80	8.6	7.0	26.6	2.9	3.1	0.015	27	60
5.5	**M3AAD**	**132**	**S**	3GAA 132 001-••B	1450	87.0	87.7	0.83	11.1	7.3	36.2	2.2	3.0	0.031	40	66
7.5	**M3AAD**	**132**	**M**	3GAA 132 002-••B	1450	88.0	88.6	0.83	14.8	7.9	49.4	2.5	3.2	0.038	48	66
11	**M2AA**	**160**	**M**	3GAA 162 111-••A	1460	89.1	89.8	0.81	22	6.5	72	2.7	2.6	0.067	75	62
11	**M3AA**	**160**	**M**	3GAA 162 101-••C	1460	92.0	92.7	0.81	21.5	7.8	72	3.3	3.2	0.091	94	62
15	**M2AA**	**160**	**L**	3GAA 162 112-••A	1460	90.4	91.0	0.82	29	7.1	98	2.7	3.3	0.088	92	62
15	**M3AA**	**160**	**L**	3GAA 162 102-••C	1460	91.8	92.5	0.82	29	8.1	98	3.0	3.6	0.102	103	62
18.5	**M2AA**	**180**	**M**	3GAA 182 111-••A	1460	91.1	91.5	0.81	36.5	7.6	121	3.1	3.5	0.102	110	64
18.5	**M3AA**	**180**	**M**	3GAA 182 101-••C	1470	92.3	92.9	0.84	35	7.0	120	2.9	2.9	0.161	124	62
22	**M2AA**	**180**	**L**	3GAA 182 112-••A	1460	91.8	92.3	0.82	42	7.9	143	3.0	3.8	0.127	128	64
22	**M3AA**	**180**	**L**	3GAA 182 102-••C	1470	93.1	93.9	0.85	40	7.1	143	3.1	3.3	0.225	161	63
30	**M2AA**	**200**	**L**	3GAA 202 011-••A	1470	92.0	92.1	0.80	59	7.8	195	3.0	3.4	0.225	177	67
30	**M3AA**	**200**	**MLB**	3GAA 202 001-••C	1475	93.4	94.0	0.84	55	7.5	194	2.5	2.8	0.34	205	63
37	**M2AA**	**225**	**S**	3GAA 222 011-••A	1475	92.8	93.0	0.85	68	6.8	240	3.0	3.1	0.35	216	68
37	**M3AA**	**225**	**SMA**	3GAA 222 001-••C	1480	93.6	93.8	0.84	68	7.6	239	3.1	3.3	0.37	215	66
45	**M2AA**	**225**	**M**	3GAA 222 012-••A	1475	93.0	93.1	0.84	84	8.1	291	3.5	3.2	0.41	237	68
45	**M3AA**	**225**	**SMB**	3GAA 222 002-••C	1480	94.2	94.4	0.83	83	7.6	291	2.8	3.0	0.42	230	66
55	**M2AA**	**250**	**M**	3GAA 252 011-••A	1475	93.7	94.3	0.84	98	6.8	356	2.5	2.6	0.5	286	66
55	**M3AA**	**250**	**SMA**	3GAA 252 001-••C	1480	94.6	94.9	0.86	98	7.6	355	3.1	3.0	0.72	275	67
72	**M3AA**	**280**	**SMA**	3GAA 282 001-••C	1475	94.6	95.0	0.88	126	7.4	466	3.2	3.1	0.88	380	67
1500 r/min = 4-poles					**400 V 50 Hz**									**High-output design**		
0.45	**M2VAD**	**71**	**BB**	3GVA 072 003-••C	1390	75.5	75.3	0.76	1.15	4.1	3.11	2.1	2.3	0.00089	6.5	45
0.55	**M2VAD**	**71**	**C**	3GVA 072 004-••C	1410	77.3	76.9	0.73	1.45	4.8	3.74	2.7	2.9	0.0011	7	45
0.95	**M2VAD**	**80**	**C**	3GVA 082 003-••B	1410	78.9	77.9	0.75	2.35	4.3	6.44	2.9	3.3	0.001948	11	50
1.1	**M2VAD**	**80**	**C**	3GVA 082 004-••B	1390	74.7	76.6	0.77	2.8	4.3	7.8	3.1	2.3	0.001948	11	50
1.85 [1]	**M3AAD**	**90**	**L**	3GAA 092 003-••E	1390	79.5	78.1	0.80	4.4	4.5	13	2.2	2.4	0.0043	16	50
2.2 [1]	**M3AAD**	**90**	**LB**	3GAA 092 004-••E	1390	80.3	81.0	0.83	4.85	4.5	15	2.2	2.4	0.0048	17	50
4 [1]	**M3AAD**	**100**	**LC**	3GAA 102 003-••E	1420	81.0	81.7	0.82	8.65	5.5	27	2.5	2.8	0.009	25	60
5.5 [1]	**M3AAD**	**112**	**MB**	3GAA 112 002-••B	1425	84.5	83.5	0.83	11.4	7.1	36.9	2.8	3.1	0.018	34	60
9.2 [1]	**M3AAD**	**132**	**MBA**	3GAA 132 004-••B	1450	88.0	88.6	0.85	17.8	7.3	60	2.0	2.8	0.048	59	63
11 [1]	**M3AAD**	**132**	**MB**	3GAA 132 003-••B	1450	88.0	89.4	0.86	21	8.3	72	2.5	2.7	0.048	59	66
55	**M3AA**	**225**	**SMC**	3GAA 222 003-••C	1480	94.6	95.0	0.84	100	7.5	356	3.5	3.0	0.49	265	66

[1] Temperature rise class F

Note: When ordering motors, the following variant codes have to be added:

acc. to ATEX 453 'DIP/Ex tD acc. to ATEX directive 94/9/EC, T=125°C, cat. 2D, IP65'

acc. to IEC 805 'DIP/Ex tD, IEC 61241, T125°C, IP55 (zone 21)'

The two bullets in the product code indicate choice of mounting arrangement, voltage and frequency (see ordering information.

Motors are certified for the voltages 380-415 VD/660-690 VY 50 Hz and 440 V 60 Hz acc. to IEC 60034-1. Data for other voltages < 690 V on request.

Dust ignition proof motors 56-280

Technical data for Category 2 D - T = 125°C - IP 65 - aluminum motors

IC 411; Insulation class F. temperature rise class B

Output kW 50 Hz	Motor type			Product code	Speed r/min	Efficiency at FL 100%	Efficiency at FL 75%	Power factor cos φ	Current I_N A	Current I_s/I_N	Torque T_N Nm	Torque T_s/T_N	Torque T_{max}/T_N	Moment of inertia J = 1/4 GD² kgm²	Weight kg	Sound pressure level L_p dB(A)
72	**M3AA**	**250**	**SMB**	3GAA 252 002-••C	1475	94.6	95.0	0.88	126	7.4	466	3.2	3.1	0.88	335	67
1000 r/min = 6-poles					**400 V 50 Hz**									**Basic design**		
0.18	**M2VAD**	**71**	**A**	3GVA 073 001-••C	920	61.1	57.7	0.69	0.64	2.9	1.88	2.1	2.2	0.00063	5.5	42
0.25	**M2VAD**	**71**	**B**	3GVA 073 002-••C	920	64.9	62.3	0.65	0.86	3.2	2.61	2.5	2.7	0.00081	6.5	42
0.37	**M2VAD**	**80**	**A**	3GVA 083 001-••B	925	72.9	70.8	0.72	1.04	3.8	3.82	3.1	3.4	0.001842	9	47
0.55	**M2VAD**	**80**	**B**	3GVA 083 002-••B	925	73.3	71.9	0.71	1.55	3.4	5.68	2.9	3.1	0.002176	10	47
0.75	**M3AAD**	**90**	**S**	3GAA 093 001-••E	930	71.5	70.7	0.67	2.36	4.0	7.5	1.9	2.3	0.0032	13	44
1.1	**M3AAD**	**90**	**L**	3GAA 093 002-••E	930	74.4	72.5	0.69	3.25	4.0	11	2.1	2.4	0.0043	16	44
1.5	**M3AAD**	**100**	**L**	3GAA 103 001-••E	950	80.0	77.0	0.71	3.92	4.5	15	1.9	2.3	0.0082	23	49
2.2	**M3AAD**	**112**	**M**	3GAA 113 001-••B	940	80.5	79.3	0.74	5.4	5.6	22.3	2.1	2.7	0.015	27	66
3	**M3AAD**	**132**	**S**	3GAA 133 001-••B	960	84.5	82.7	0.75	6.9	6.1	29.8	2.0	2.6	0.031	39	57
4	**M3AAD**	**132**	**MA**	3GAA 133 002-••B	960	85.5	83.1	0.78	8.7	7.1	39.7	2.0	2.8	0.038	46	61
5.5	**M3AAD**	**132**	**MB**	3GAA 133 003-••B	955	86.0	85.0	0.78	11.9	6.9	55	2.2	2.8	0.045	54	57
7.5	**M3AA**	**160**	**M**	3GAA 163 101-••C	970	89.3	90.4	0.79	15.4	6.6	74	1.9	2.6	0.089	88	59
11	**M3AA**	**160**	**L**	3GAA 163 102-••C	970	89.8	90.5	0.78	23	6.9	109	2.1	3.4	0.107	102	59
15	**M3AA**	**180**	**L**	3GAA 183 101-••C	970	90.8	91.5	0.78	31	6.8	147	2.0	3.3	0.217	151	59
18.5	**M3AA**	**200**	**MLA**	3GAA 203 001-••C	985	91.1	91.7	0.81	36	7.0	180	2.7	2.5	0.37	165	63
22	**M3AA**	**200**	**MLB**	3GAA 203 002-••C	980	91.7	92.2	0.81	43	6.8	214	2.9	3.0	0.43	185	63
30	**M3AA**	**225**	**SMB**	3GAA 223 001-••C	985	92.8	93.0	0.83	56	7.4	290	3.2	2.8	0.64	225	63
37	**M3AA**	**250**	**SMA**	3GAA 253 001-••C	985	93.4	93.7	0.83	69	7.2	358	3.2	2.9	1.16	280	63
45 [1]	**M3AA**	**280**	**SMA**	3GAA 283 001-••C	985	93.4	93.7	0.84	83	7.2	436	3.2	2.8	1.49	375	63
1000 r/min = 6-poles					**400 V 50 Hz**									**High-output design**		
0.32	**M2VAD**	**71**	**C**	3GVA 073 003-••C	920	64.8	61.6	0.63	1.15	3.2	3.33	2.6	2.8	0.0011	7	42
0.37	**M2VAD**	**71**	**C**	3GVA 073 004-••C	900	60.1	60.4	0.70	1.2	2.6	4.1	2.2	2.0	0.0011	7	42
0.75	**M2VAD**	**80**	**C**	3GVA 083 003-••B	920	67.9	70.5	0.76	2.1	3.4	8.1	2.4	2.2	0.002576	10	47
1.3 [1]	**M3AAD**	**90**	**LB**	3GAA 093 003-••E	910	69.0	69.0	0.71	3.85	4.0	13.5	1.9	2.2	0.0048	18	44
2.2 [1]	**M3AAD**	**100**	**LC**	3GAA 103 002-••E	940	77.0	72.8	0.71	5.9	4.5	22	1.9	2.3	0.009	26	49
3 [1]	**M3AAD**	**112**	**MB**	3GAA 113 002-••B	935	80.0	79.9	0.76	7.2	5.5	30.6	2.0	2.7	0.018	33	55
6.5 [1]	**M3AAD**	**132**	**MC**	3GAA 133 004-••B	960	85.0	84.5	0.75	14.8	6.6	64	2.0	2.7	0.049	59	61
37	**M3AA**	**225**	**SMC**	3GAA 223 002-••C	985	93.0	93.6	0.83	69	7.3	360	3.6	2.8	0.75	252	63
45 [1]	**M3AA**	**250**	**SMB**	3GAA 253 002-••C	985	93.4	93.7	0.84	83	7.2	436	3.2	2.8	1.49	320	63

[1] Temperature rise class F

Note: When ordering motors, the following variant codes have to be added:

acc. to ATEX 453 'DIP/Ex tD acc. to ATEX directive 94/9/EC, T=125°C, cat. 2D, IP65'

acc. to IEC 805 'DIP/Ex tD, IEC 61241, T125°C, IP55 (zone 21)'

The two bullets in the product code indicate choice of mounting arrangement, voltage and frequency (see ordering information.

Motors are certified for the voltages 380-415 VD/660-690 VY 50 Hz and 440 V 60 Hz acc. to IEC 60034-1. Data for other voltages < 690 V on request.

Dust ignition proof motors 56-280

Technical data for Category 2 D - T = 125°C - IP 65 - aluminum motors

IC 411; Insulation class F. temperature rise class B

Output kW 50 Hz	Motor type			Product code		Speed r/min	Efficiency at FL 100%	Efficiency at FL 75%	Power factor cos φ	Current I_N A	Current I_s/I_N	Torque T_N Nm	Torque T_s/T_N	Torque T_{max}/T_N	Moment of inertia J = 1/4 GD² kgm²	Weight kg	Sound pressure level L_p dB(A)
750 r/min = 8-poles						**400 V 50 Hz**									**Basic design**		
0.09	**M2VAD**	**71**	**A**	3GVA	074 001-••C	690	45.8	37.5	0.57	0.52	2.2	1.25	2.3	2.3	0.00063	5.5	40
0.12	**M2VAD**	**71**	**B**	3GVA	074 002-••C	690	46.4	38.1	0.55	0.69	2.2	1.67	2.5	2.5	0.00081	6.5	40
0.18	**M2VAD**	**80**	**A**	3GVA	084 001-••B	700	59.9	54.5	0.6	0.75	3.1	2.46	3.2	3.6	0.001842	9	45
0.25	**M2VAD**	**80**	**B**	3GVA	084 002-••B	700	70.7	67.4	0.62	0.85	3.1	3.52	2.9	3.1	0.002176	10	45
0.37	**M3AAD**	**90**	**S**	3GAA	094 001-••E	700	61.5	43.4	0.56	1.6	3	5	1.9	2.4	0.0032	13	43
0.55	**M3AAD**	**90**	**L**	3GAA	094 002-••E	690	62.9	56.4	0.57	2.35	3	7.5	1.7	2.1	0.0043	16	43
0.75	**M3AAD**	**100**	**LA**	3GAA	104 001-••E	700	72	63.6	0.59	2.55	3.5	10	2.1	2.7	0.0069	20	46
1.1	**M3AAD**	**100**	**LB**	3GAA	104 002-••E	700	73	68.8	0.64	3.35	3.5	15	2.1	2.7	0.0082	23	46
1.5	**M3AAD**	**112**	**M**	3GAA	114 001-••B	695	74.5	75.9	0.65	4.5	4.1	20.6	1.9	2.4	0.016	28	52
2.2	**M3AAD**	**132**	**S**	3GAA	134 001-••B	720	80.5	77.8	0.67	5.9	5.3	29.2	1.6	2.5	0.038	46	56
3	**M3AAD**	**132**	**M**	3GAA	134 002-••B	720	82	79.2	0.68	7.8	5.5	39.8	1.8	2.5	0.045	53	56
4	**M3AA**	**160**	**MA**	3GAA	164 101-••C	715	84.1	84.7	0.69	10	5.1	53	2.1	2.6	0.072	75	59
5.5	**M3AA**	**160**	**M**	3GAA	164 102-••C	710	84.7	85.6	0.7	13.4	5.5	74	2.4	2.6	0.091	88	59
7.5	**M3AA**	**160**	**L**	3GAA	164 103-••C	715	86.3	87.3	0.7	18.1	5.4	100	2.4	2.7	0.131	118	59
11	**M3AA**	**180**	**L**	3GAA	184 101-••C	720	89.6	90.3	0.76	23.5	5.7	146	2.1	2.5	0.224	147	59
15	**M3AA**	**200**	**MLA**	3GAA	204 001-••C	740	91.1	91.6	0.82	29	7.5	196	3	3.2	0.45	175	60
18.5	**M3AA**	**225**	**SMA**	3GAA	224 001-••C	730	91.1	91.6	0.79	37	6.8	242	2.8	3.1	0.61	210	63
22	**M3AA**	**225**	**SMB**	3GAA	224 002-••C	730	91.5	92.2	0.77	45	6.4	287	2.4	2.6	0.68	225	63
30	**M3AA**	**250**	**SMA**	3GAA	254 001-••C	735	92.8	93.1	0.79	59	7.3	389	2.2	2.6	1.25	280	63
37	**M3AA**	**280**	**SMA**	3GAA	284 001-••C	735	93	93.3	0.81	74	7.4	478	2.9	3.1	1.52	375	63
750 r/min = 8-poles						**400 V 50 Hz**									**High-output design**		
0.18	**M2VAD**	**71**	**C**	3GVA	074 003-••C	680	51.3	49.9	0.61	0.8	2.2	2.6	2.5	2.2	0.0011	7	40
0.37	**M2VAD**	**80**	**C**	3GVA	084 003-••B	690	64.6	65.3	0.69	1.2	3	5.3	2.3	2.1	0.002576	11	45
0.75	[1] **M3AAD**	**90**	**LB**	3GAA	094 003-••E	680	64	60	0.65	2.65	3	10	1.8	2	0.0048	18	43
2	[1] **M3AAD**	**112**	**MB**	3GAA	114 002-••B	685	73.5	68.4	0.67	5.9	4.4	27.9	1.9	2.2	0.018	33	52
3.8	[1] **M3AAD**	**132**	**MB**	3GAA	134 003-••B	710	80.5	78.3	0.69	9.9	5.2	51	1.8	2.3	0.049	59	56
18.5	**M3AA**	**200**	**MLB**	3GAA	204 002-••C	735	91.4	91.8	0.81	36	7.3	241	2.6	3.1	0.54	200	60
37	**M3AA**	**250**	**SMB**	3GAA	254 002-••C	735	93	93.3	0.81	74	7.4	479	2	2.6	1.52	320	63

[1] Temperature rise class F

Note: When ordering motors, the following variant codes have to be added:

acc. to ATEX 453 'DIP/Ex tD acc. to ATEX directive 94/9/EC, T=125°C, cat. 2D, IP65'

acc. to IEC 805 'DIP/Ex tD, IEC 61241, T125°C, IP55 (zone 21)'

The two bullets in the product code indicate choice of mounting arrangement, voltage and frequency (see ordering information.

Motors are certified for the voltages 380-415 VD/660-690 VY 50 Hz and 440 V 60 Hz acc. to IEC 60034-1. Data for other voltages < 690 V on request.

Dust ignition proof motors 80-400

Technical data for Category 2 D - T = 125°C - IP 65 - cast iron frame

ATEX Certified

IC 411; Insulation class F. temperature rise class B

Output kW 50 Hz		Motor type	Product code	Speed r/min	Efficiency at FL 100%	Efficiency at FL 75%	Power factor cos φ	Current I_N A	Current I_s/I_N	Torque T_N Nm	Torque T_s/T_N	Torque T_{max}/T_N	Moment of inertia J=1/4 GD² kgm²	Weight kg	Sound pressure level L_p dB(A)
3000 r/min = 2-poles				**400 V 50 Hz**									**Basic design**		
0.75		**M3GP 80 MA**	3GGP 081 310-••G	2861	78.2	76.7	0.86	1.62	7.3	2.5	3.7	3.8	0.0006	28	59
1.1		**M3GP 80 MB**	3GGP 081 320-••G	2831	82.0	82.0	0.89	2.21	5.7	3.7	3.0	3.2	0.0007	30	59
1.5		**M3GP 90 SLA**	3GGP 091 010-••G	2881	82.7	82.6	0.88	3	6.7	5	3.0	3.5	0.001	50	61
2.2		**M3GP 90 SLC**	3GGP 091 030-••G	2871	85.3	85.8	0.90	4.19	7.5	7.3	2.7	3.5	0.0014	44	61
3		**M3GP 100 LA**	3GGP 101 510-••G	2896	87.4	87.7	0.90	5.6	7.2	10	2.2	3.0	0.0036	58	65
4		**M3GP 112 MB**	3GGP 111 320-••G	2901	87.7	87.8	0.90	7.5	7.2	13	3.6	3.7	0.0043	61	65
5.5		**M3GP 132 SMB**	3GGP 131 220-••G	2905	87.6	87.5	0.90	10.4	6.7	18	2.4	3.3	0.009	89	71
7.5		**M3GP 132 SMD**	3GGP 131 240-••G	2914	89.0	89.2	0.90	13.8	7.6	25	2.8	3.6	0.012	97	71
11		**M3GP 160 MLA**	3GGP 161 410-••G	2936	91.5	91.4	0.87	20	7.2	36	2.9	3.3	0.039	147	71
15		**M3GP 160 MLB**	3GGP 161 420-••G	2934	91.9	91.8	0.88	28	7.5	49	3.1	3.5	0.047	156	71
18.5		**M3GP 160 MLC**	3GGP 161 430-••G	2934	92.6	92.7	0.90	33	7.5	60	2.8	3.4	0.054	167	71
22		**M3GP 180 MLA**	3GGP 181 410-••G	2938	92.8	92.9	0.90	39	6.9	72	2.5	3.1	0.077	194	71
30		**M3GP 200 MLA**	3GGP 201 410-••G	2946	94.2	94.3	0.88	54	7.4	97	3.0	3.2	0.15	275	74
37		**M3GP 200 MLC**	3GGP 201 430-••G	2948	94.3	94.2	0.89	65	7.5	120	2.8	3.2	0.19	305	75
45		**M3GP 225 SMB**	3GGP 221 220-••G	2968	94.8	94.7	0.87	79	7.2	145	2.7	3.0	0.26	365	76
55		**M3GP 250 SMA**	3GGP 251 210-••G	2970	94.7	94.5	0.88	96	7.7	177	2.4	3.1	0.49	425	75
75		**M3GP 280 SMA**	3GGP 281 210-••G	2978	94.8	94.3	0.88	131	7.6	240	2.1	3.0	0.8	625	77
90		**M3GP 280 SMB**	3GGP 281 220-••G	2976	95.1	94.8	0.90	152	7.4	289	2.1	2.9	0.9	665	77
110		**M3GP 315 SMA**	3GGP 311 210-••G	2982	95.1	94.4	0.86	194	7.6	352	2.0	3.0	1.2	880	78
132		**M3GP 315 SMB**	3GGP 311 220-••G	2982	95.5	95.0	0.88	228	7.4	423	2.2	3.0	1.4	940	78
160		**M3GP 315 SMC**	3GGP 311 230-••G	2981	96.1	95.6	0.89	269	7.5	513	2.3	3.0	1.7	1025	78
200		**M3GP 315 MLA**	3GGP 311 410-••G	2980	96.3	95.9	0.90	336	7.7	641	2.6	3.0	2.1	1190	78
250	2)	**M3GP 355 SMA**	3GGP 351 210-••G	2984	96.4	95.9	0.89	425	7.7	800	2.1	3.3	3	1600	83
315	2)	**M3GP 355 SMB**	3GGP 351 220-••G	2980	96.6	96.3	0.89	535	7.0	1009	2.1	3.0	3.4	1680	83
355	2)	**M3GP 355 SMC**	3GGP 351 230-••G	2984	96.8	96.5	0.88	604	7.2	1136	2.2	3.0	3.6	1750	83
400	2)	**M3GP 355 MLA**	3GGP 351 410-••G	2982	96.9	96.7	0.88	680	7.1	1281	2.3	2.9	4.1	2000	83
450	2)	**M3GP 355 MLB**	3GGP 351 420-••G	2983	97.1	97.0	0.90	750	7.9	1441	2.2	2.9	4.3	2080	83
500	2)	**M3GP 355 LKA**	3GGP 351 810-••G	2982	97.1	97.0	0.90	830	7.5	1601	2.1	3.5	4.8	2320	83
560	2)	**M3GP 355 LKB**	3GGP 351 820-••G	2982	97.2	97.1	0.90	930	8.0	1793	2.3	3.6	5.2	2460	83
560	3)	**M3GP 400 LKA**	3GGP 401 810-••G	2988	97.2	97.0	0.89	940	7.8	1790	2.1	3.4	7.9	2950	82
560	3)	**M3GP 400 LA**	3GGP 401 510-••G	2988	97.2	97.0	0.89	940	7.8	1790	2.1	3.4	7.9	2950	82
630	3)	**M3GP 400 LKB**	3GGP 401 820-••G	2987	97.4	97.3	0.89	1055	7.8	2014	2.2	3.4	8.2	3050	82
630	3)	**M3GP 400 LB**	3GGP 401 520-••G	2987	97.4	97.3	0.89	1055	7.8	2014	2.2	3.4	8.2	3050	82
710	3)	**M3GP 400 LKC**	3GGP 401 830-••G	2987	97.5	97.4	0.89	1185	7.8	2270	2.6	3.4	9.3	3300	82
710	3)	**M3GP 400 LC**	3GGP 401 530-••G	2987	97.5	97.4	0.89	1185	7.8	2270	2.6	3.4	9.3	3300	82
3000 r/min = 2-poles				**400 V 50 Hz**									**High-output design**		
9.2		**M3GP 132 SME**	3GGP 131 250-••G	2875	86.2	86.6	0.91	17.1	6.1	30.6	2.2	2.9	0.012	97	77
22		**M3GP 160 MLD**	3GGP 161 440-••G	2929	91.7	91.6	0.90	39	7.4	72	2.8	3.4	0.059	173	77
30		**M3GP 180 MLB**	3GGP 181 420-••G	2944	93.0	92.9	0.88	54	7.5	97	2.8	3.5	0.092	210	78
37	4)	**M3GP 180 MLC**	3GGP 181 430-••G	2947	93.9	93.9	0.89	65	7.9	120	2.9	3.6	0.114	229	78
45	5)	**M3GP 200 MLE**	3GGP 201 450-••G	2944	93.9	94.0	0.88	79	7.3	146	2.9	3.1	0.22	310	79
55		**M3GP 225 SMC**	3GGP 221 230-••G	2965	94.5	94.2	0.88	96	7.1	177	2.6	3.0	0.29	385	80
67	4)5)	**M3GP 225 SMD**	3GGP 221 240-••G	2966	94.6	94.1	0.86	120	7.4	216	2.8	3.2	0.31	395	78
75		**M3GP 250 SMB**	3GGP 251 220-••G	2969	95.2	95.1	0.89	129	7.9	241	2.6	3.2	0.57	465	80
110		**M3GP 280 SMC**	3GGP 281 230-••G	2978	95.7	95.3	0.90	185	7.9	353	2.4	3.0	1.15	725	77

Notes: **Full data for types M3GP 80-132 are available on request. Availability of to be checked from ABB Sales Office.**

When ordering motors, the following variant code has to be added: acc. to needs
453 'DIP/Ex tD acc. to ATEX directive 94/9/EC, T= 125°C, cat. 2D, IP 65'.
805 'DIP/Ex tD, IEC 61241, T125°C, IP65 (zone 21)'
806 'DIP/Ex tD, IEC 61241, T125°C, IP65 (zone 22)'

The two bullets in the product code indicate choice of mounting arrangement (see ordering information), voltage and frequency (below).

Values above are given for 400V 50 Hz; data for other voltages on request.

Dust ignition proof motors 80-400

Technical data for Category 2 D - T = 125°C - IP 65 - cast iron frame

IC 411; Insulation class F. temperature rise class B

Output kW 50 Hz		Motor type	Product code	Speed r/min	Efficiency at FL 100%	Efficiency at FL 75%	Power factor cos φ	Current I_N A	Current I_s/I_N	Torque T_N Nm	Torque T_s/T_N	Torque T_{max}/T_N	Moment of inertia J=1/4 GD² kgm²	Weight kg	Sound pressure level L_p dB(A)
1500 r/min = 4-poles				**400 V 50 Hz**									**Basic design**		
0.55		**M3GP 80 MA**	3GGP 082 310-••G	1421	77.2	76.4	0.76	1.4	4.9	3.7	2.3	2.7	0.001	38	59
0.75		**M3GP 80 MB**	3GGP 082 320-••G	1413	78.3	78.4	0.79	1.8	5.1	5.1	2.4	2.7	0.0012	29	59
1.1		**M3GP 90 SLA**	3GGP 092 010-••G	1435	80.8	80.3	0.81	2.48	5.6	7.3	2.8	3.5	0.002	42	54
1.5		**M3GP 90 SLC**	3GGP 092 030-••G	1431	81.8	81.8	0.81	3.31	6.4	10	2.9	3.4	0.003	53	54
2.2		**M3GP 100 LA**	3GGP 102 510-••G	1441	86.4	87.0	0.86	4.4	7.0	14.5	2.7	3.3	0.0075	58	52
3		**M3GP 100 LB**	3GGP 102 520-••G	1442	86.2	86.7	0.83	6.1	7.0	20	2.7	3.4	0.0081	60	52
4		**M3GP 112 MC**	3GGP 112 330-••G	1436	85.7	86.0	0.81	8.4	6.9	27	2.9	3.7	0.0093	63	52
5.5		**M3GP 132 SMB**	3GGP 132 220-••G	1448	87.6	87.9	0.81	11.4	6.7	36	3.1	3.3	0.02	93	60
7.5		**M3GP 132 SMD**	3GGP 132 240-••G	1447	88.4	88.7	0.81	15.4	6.6	50	3.1	3.4	0.023	99	60
11		**M3GP 160 MLC**	3GGP 162 430-••G	1470	91.6	91.6	0.82	22.5	7.7	71	3.1	3.6	0.09	166	62
15		**M3GP 160 MLE**	3GGP 162 450-••G	1467	92.3	92.3	0.83	30	7.6	98	3.1	3.6	0.121	189	62
18.5		**M3GP 180 MLA**	3GGP 182 410-••G	1474	92.7	92.8	0.82	36	7.3	120	2.7	3.2	0.176	206	62
22		**M3GP 180 MLB**	3GGP 182 420-••G	1471	92.8	92.9	0.82	42	7.1	143	2.6	3.0	0.191	214	62
30		**M3GP 200 MLB**	3GGP 202 420-••G	1475	93.7	93.8	0.84	56	7.4	194	3.3	3.0	0.34	305	61
37		**M3GP 225 SMB**	3GGP 222 220-••G	1480	93.8	93.6	0.84	69	7.7	239	3.2	2.9	0.42	355	67
45		**M3GP 225 SMC**	3GGP 222 230-••G	1477	94.6	94.6	0.86	81	7.4	291	3.2	2.7	0.49	390	67
55		**M3GP 250 SMA**	3GGP 252 210-••G	1479	94.7	94.8	0.83	101	7.2	355	2.5	3.1	0.72	415	66
75		**M3GP 280 SMA**	3GGP 282 210-••G	1484	94.9	94.8	0.85	135	6.9	483	2.5	2.8	1.25	625	68
90		**M3GP 280 SMB**	3GGP 282 220-••G	1483	95.3	95.3	0.86	159	7.2	580	2.5	2.7	1.5	665	68
110		**M3GP 315 SMA**	3GGP 312 210-••G	1487	95.6	95.4	0.86	193	7.2	706	2.0	2.5	2.3	900	70
132		**M3GP 315 SMB**	3GGP 312 220-••G	1487	95.8	95.7	0.86	232	7.1	848	2.3	2.7	2.6	960	70
160		**M3GP 315 SMC**	3GGP 312 230-••G	1487	96.0	95.9	0.85	287	7.2	1028	2.4	2.9	2.9	1000	70
200		**M3GP 315 MLA**	3GGP 312 410-••G	1486	96.2	96.2	0.86	351	7.2	1285	2.5	2.9	3.5	1160	70
250		**M3GP 355 SMA**	3GGP 352 210-••G	1488	96.5	96.4	0.86	438	7.1	1604	2.3	2.7	5.9	1610	74
315		**M3GP 355 SMB**	3GGP 352 220-••G	1488	96.7	96.6	0.86	550	7.3	2022	2.3	2.8	6.9	1780	74
355		**M3GP 355 SMC**	3GGP 352 230-••G	1487	96.7	96.6	0.86	616	6.8	2280	2.4	2.7	7.2	1820	78
400		**M3GP 355 MLA**	3GGP 352 410-••G	1489	96.9	96.7	0.85	700	6.8	2565	2.3	2.6	8.4	2140	78
450		**M3GP 355 MLB**	3GGP 352 420-••G	1490	96.9	96.7	0.86	784	6.9	2884	2.3	2.9	8.4	2140	78
500		**M3GP 355 LKA**	3GGP 352 810-••G	1490	97.0	96.9	0.86	875	6.8	3204	2.0	3.0	10	2500	78
560		**M3GP 400 LA**	3GGP 402 510-••G	1491	97.1	97.0	0.85	980	7.4	3587	2.4	3.0	15	3200	78
560		**M3GP 400 LKA**	3GGP 402 810-••G	1491	97.1	97.0	0.85	980	7.4	3587	2.4	3.0	15	3200	78
630		**M3GP 400 LB**	3GGP 402 520-••G	1491	97.1	97.0	0.87	1085	7.6	4035	2.2	3.1	16	3300	78
630		**M3GP 400 LKB**	3GGP 402 820-••G	1491	97.1	97.0	0.87	1085	7.6	4035	2.2	3.1	16	3300	78
710	1)	**M3GP 400 LC**	3GGP 402 530-••G	1491	97.2	97.1	0.86	1240	7.6	4547	2.4	3.2	17	3400	78
710	1)	**M3GP 400 LKC**	3GGP 402 830-••G	1491	97.2	97.1	0.86	1240	7.6	4547	2.4	3.2	17	3400	78
1500 r/min = 4-poles				**400 V 50 Hz**									**High-output design**		
9.2	1)	**M3GP 132 SME**	3GGP 132 250-••G	1422	86.4	87.8	0.84	18.5	5.5	62	2.5	2.7	0.023	99	60
18.5		**M3GP 160 MLF**	3GGP 162 460-••G	1469	92.5	92.8	0.83	36.5	8.0	120	3.2	3.6	0.121	189	68
22	4)	**M3GP 160 MLG**	3GGP 162 470-••G	1466	92.1	92.2	0.81	44.5	8.2	143	3.3	3.6	0.121	189	68
30	1)	**M3GP 180 MLC**	3GGP 182 430-••G	1473	92.5	92.5	0.81	59	7.8	194	3.1	3.4	0.239	233	66
37		**M3GP 200 MLC**	3GGP 202 430-••G	1475	93.5	93.5	0.82	70	7.5	239	3.5	3.2	0.34	305	73
55	5)	**M3GP 225 SMD**	3GGP 222 240-••G	1476	94.2	94.1	0.85	100	7.6	356	3.4	2.8	0.49	390	74
60	4)5)	**M3GP 225 SME**	3GGP 222 250-••G	1479	94.2	94.0	0.84	110	8.0	387	3.6	3.0	0.55	410	74
75	5)	**M3GP 250 SMB**	3GGP 252 220-••G	1476	94.8	95.0	0.86	133	7.6	485	2.8	3.2	0.88	470	73
110		**M3GP 280 SMC**	3GGP 282 230-••G	1485	95.7	95.7	0.86	195	7.6	707	3.0	3.0	1.85	725	68

1) Temperature rise class F.
2) -3dB(A) sound pressure level reduction with unidirectional fan construction. Direction of rotation must be stated when ordering, see variant codes 044 and 045.
3) Unidirectional fan construction as standard. Direction of rotation must be stated when ordering, see variant codes 044 and 045.
4) The output exceeds one step higher output than the basic with rated output acc. to CENELEC.
5) For 400-415 V 50 Hz (380 V 50 Hz voltage code B or A).

Dust ignition proof motors 80-400

Technical data for Category 2 D - T = 125°C - IP 65 - cast iron frame

ATEX Certified

IC 411; Insulation class F. temperature rise class B

Output kW 50 Hz	Motor type	Product code	Speed r/min	Efficiency at FL 100%	Efficiency at FL 75%	Power factor cos φ	Current I_N A	Current I_s/I_N	Torque T_N Nm	Torque T_s/T_N	Torque T_{max}/T_N	Moment of inertia J=1/4 GD² kgm²	Weight kg	Sound pressure level L_p dB(A)
1000 r/min = 6-poles			**400 V 50 Hz**									**Basic design**		
0.37	**M3GP 80 MA**	3GGP 083 310-••G	953	67.2	66.3	0.62	1.32	4.8	3.7	3.4	3.6	0.0022	38	50
0.55	**M3GP 80 MB**	3GGP 083 320-••G	938	67.9	66.4	0.68	1.79	4.3	5.6	2.8	2.9	0.0022	38	50
0.75	**M3GP 90 SLA**	3GGP 093 010-••G	942	74.0	73.1	0.69	2.17	4.5	7.6	2.8	3.2	0.0036	41	44
1.1	**M3GP 90 SLC**	3GGP 093 030-••G	940	75.6	74.5	0.67	3.25	4.6	11	3.1	3.4	0.0037	43	44
1.5	**M3GP 100 LA**	3GGP 103 510-••G	951	81.2	80.9	0.74	3.7	4.2	15	2.3	2.9	0.012	66	54
2.2	**M3GP 112 MB**	3GGP 113 320-••G	950	81.8	82.0	0.76	5.2	5.9	22	2.2	2.8	0.014	60	54
3	**M3GP 132 SMB**	3GGP 133 220-••G	961	83.2	82.2	0.77	6.9	6.1	30	2.1	3.0	0.032	93	57
4	**M3GP 132 SMC**	3GGP 133 230-••G	967	85.6	85.3	0.74	9.3	6.6	39.5	2.3	3.4	0.034	95	57
5.5	**M3GP 132 SMD**	3GGP 133 240-••G	958	85.5	85.6	0.76	12.5	6.7	55	2.2	3.0	0.036	97	57
7.5	**M3GP 160 MLA**	3GGP 163 410-••G	965	89.0	89.7	0.81	15.5	6.5	74	1.9	3.0	0.088	160	57
11	**M3GP 160 MLB**	3GGP 163 420-••G	965	89.6	90.3	0.80	23	7.1	109	2.1	3.3	0.106	173	65
15	**M3GP 180 MLB**	3GGP 183 420-••G	972	91.4	91.6	0.81	31	7.0	147	1.9	3.3	0.221	233	58
18.5	**M3GP 200 MLA**	3GGP 203 410-••G	983	91.6	91.7	0.81	37	7.1	180	3.2	3.1	0.37	265	66
22	**M3GP 200 MLB**	3GGP 203 420-••G	983	91.9	91.9	0.81	43	7.5	214	3.2	3.2	0.43	285	61
30	**M3GP 225 SMB**	3GGP 223 220-••G	985	93.0	93.0	0.81	58	7.4	291	3.4	3.0	0.64	350	61
37	**M3GP 250 SMA**	3GGP 253 210-••G	987	93.6	93.6	0.81	71	7.2	358	3.2	2.9	1.16	420	66
45	**M3GP 280 SMA**	3GGP 283 210-••G	990	94.4	94.3	0.84	82	7.0	434	2.5	2.5	1.85	605	66
55	**M3GP 280 SMB**	3GGP 283 220-••G	990	94.6	94.6	0.84	101	7.0	531	2.7	2.6	2.2	645	66
75	**M3GP 315 SMA**	3GGP 313 210-••G	992	95.0	94.7	0.82	141	7.4	722	2.4	2.8	3.2	830	70
90	**M3GP 315 SMB**	3GGP 313 220-••G	992	95.5	95.3	0.84	163	7.5	866	2.4	2.8	4.1	930	70
110	**M3GP 315 SMC**	3GGP 313 230-••G	991	95.6	95.5	0.83	202	7.4	1060	2.5	2.9	4.9	1000	70
132	**M3GP 315 MLA**	3GGP 313 410-••G	991	95.8	95.7	0.83	240	7.5	1272	2.7	3.0	5.8	1150	68
160	**M3GP 355 SMA**	3GGP 353 210-••G	993	96.0	95.8	0.83	293	7.0	1539	2.0	2.6	7.9	1520	75
200	**M3GP 355 SMB**	3GGP 353 220-••G	993	96.2	96.1	0.84	357	7.2	1923	2.2	2.7	9.7	1680	75
250	**M3GP 355 SMC**	3GGP 353 230-••G	993	96.5	96.3	0.83	450	7.4	2404	2.6	2.9	11.3	1820	75
315	**M3GP 355 MLB**	3GGP 353 420-••G	992	96.4	96.3	0.83	570	7.0	3032	2.5	2.7	13.5	2180	75
355	**M3GP 355 LKA**	3GGP 353 810-••G	992	96.6	96.5	0.83	640	7.6	3417	2.7	2.9	15.5	2500	75
400	**M3GP 400 LA**	3GGP 403 510-••G	993	96.7	96.6	0.82	730	7.1	3847	2.3	2.7	17	2900	76
400	**M3GP 400 LKA**	3GGP 403 810-••G	993	96.7	96.6	0.82	730	7.1	3847	2.3	2.7	17	2900	76
450	**M3GP 400 LB**	3GGP 403 520-••G	994	96.9	96.7	0.82	818	7.4	4323	2.4	2.8	20.5	3150	76
450	**M3GP 400 LKB**	3GGP 403 820-••G	994	96.9	96.7	0.82	818	7.4	4323	2.4	2.8	20.5	3150	76
500	**M3GP 400 LKC**	3GGP 403 830-••G	993	96.9	96.8	0.83	900	7.2	4808	2.5	2.7	22	3300	76
500	**M3GP 400 LC**	3GGP 403 530-••G	993	96.9	96.8	0.83	900	7.2	4808	2.5	2.7	22	3300	76
560	**M3GP 400 LD**	3GGP 403 540-••G	993	96.9	96.8	0.85	985	7.4	5385	2.4	3.0	24	3400	77
560	**M3GP 400 LKD**	3GGP 403 840-••G	993	96.9	96.8	0.85	985	7.4	5385	2.4	3.0	24	3400	77
1000 r/min = 6-poles			**400 V 50 Hz**									**High-output design**		
14 [1)2)]	**M3GP 160 MLC**	3GGP 163 430-••G	969	89.3	89.3	0.75	31	7.9	138	2.8	3.9	0.121	188	64
18.5	**M3GP 180 MLC**	3GGP 183 430-••G	975	90.4	90.1	0.74	41	7.2	181	2.0	3.2	0.221	233	61
30	**M3GP 200 MLC**	3GGP 203 430-••G	983	91.9	91.8	0.81	60	7.5	292	3.5	3.4	0.49	305	65
37	**M3GP 225 SMC**	3GGP 223 230-••G	983	93.0	93.1	0.83	70	7.1	359	3.0	2.8	0.75	380	64
45	**M3GP 250 SMB**	3GGP 253 220-••G	986	93.9	93.9	0.82	85	7.2	436	3.3	2.8	1.49	465	65
75	**M3GP 280 SMC**	3GGP 283 230-••G	990	95.1	95.2	0.84	137	7.3	723	2.8	2.7	2.85	725	66

Notes: **Full data for types M3GP 80-132 are available on request. Availability of to be checked from ABB Sales Office.**

When ordering motors, the following variant code has to be added: acc. to needs
453 'DIP/Ex tD acc. to ATEX directive 94/9/EC, T= 125°C, cat. 2D, IP 65'.
805 'DIP/Ex tD, IEC 61241, T125°C, IP65 (zone 21)'
806 'DIP/Ex tD, IEC 61241, T125°C, IP65 (zone 22)'

The two bullets in the product code indicate choice of mounting arrangement (see ordering information), voltage and frequency (below).

Values above are given for 400V 50 Hz; data for other voltages on request.

Dust ignition proof motors 80-400

Technical data for Category 2 D - T = 125°C - IP 65 - cast iron frame

ATEX Certified

IC 411; Insulation class F. temperature rise class B

Output kW 50 Hz	Motor type	Product code	Speed r/min	Efficiency at FL 100%	Efficiency at FL 75%	Power factor cos φ	Current I_N A	Current I_s/I_N	Torque T_N Nm	Torque T_s/T_N	Torque T_{max}/T_N	Moment of inertia J=1/4 GD² kgm²	Weight kg	Sound pressure level L_p dB(A)
750 r/min = 8-poles			**400 V 50 Hz**									**Basic design**		
0.18	**M3GP 80 MA**	3GGP 084 310-••G	720	54.0	49.0	0.48	1.08	3.3	2.4	3.7	4.0	0.0022	29	36
0.25	**M3GP 80 MB**	3GGP 084 320-••G	705	58.0	54.6	0.58	1.15	3.2	3.4	2.6	2.8	0.0022	29	36
0.37	**M3GP 90 SLA**	3GGP 094 010-••G	696	65.2	63.8	0.63	1.34	3.0	5.1	2.0	2.2	0.0036	50	36
0.55	**M3GP 90 SLC**	3GGP 094 030-••G	695	66.6	64.8	0.61	2.05	3.1	7.6	2.2	2.4	0.0037	52	36
0.75	**M3GP 100 LA**	3GGP 104 510-••G	720	74.7	72.4	0.59	2.6	3.8	10	2.0	2.9	0.012	57	54
1.1	**M3GP 100 LB**	3GGP 104 520-••G	717	75.2	73.0	0.57	3.9	3.7	15	2.1	2.9	0.012	57	54
1.5	**M3GP 112 MC**	3GGP 114 330-••G	713	75.7	73.8	0.59	5	3.5	20	2.0	2.7	0.014	70	54
2.2	**M3GP 132 SMC**	3GGP 134 230-••G	720	79.6	78.6	0.65	6.3	4.7	29	2.0	2.9	0.034	95	59
3	**M3GP 132 SMD**	3GGP 134 240-••G	710	80.2	80.4	0.70	8	4.1	40	1.7	2.3	0.036	97	59
4	**M3GP 160 MLA**	3GGP 164 410-••G	717	83.7	83.8	0.71	10.1	5.2	53	1.8	2.8	0.071	146	59
5.5	**M3GP 160 MLB**	3GGP 164 420-••G	715	84.7	85.2	0.71	13.9	5.2	73	1.9	2.8	0.09	160	53
7.5	**M3GP 160 MLC**	3GGP 164 430-••G	718	86.9	87.6	0.70	18.4	5.7	100	2.1	3.1	0.121	188	55
11	**M3GP 180 MLB**	3GGP 184 420-••G	724	90.3	90.4	0.73	24.5	5.7	145	1.7	2.7	0.239	227	63
15	**M3GP 200 MLA**	3GGP 204 410-••G	734	90.7	90.8	0.79	31	7.0	195	2.4	3.2	0.45	280	56
18.5	**M3GP 225 SMA**	3GGP 224 210-••G	734	90.8	90.8	0.74	41	6.1	241	2.2	3.0	0.61	335	55
22	**M3GP 225 SMB**	3GGP 224 220-••G	732	91.0	91.3	0.77	46	6.5	287	2.2	2.9	0.68	350	56
30	**M3GP 250 SMA**	3GGP 254 210-••G	735	92.3	92.4	0.79	61	6.7	390	2.0	2.9	1.25	420	56
37	**M3GP 280 SMA**	3GGP 284 210-••G	741	93.4	93.3	0.78	74	7.3	477	1.7	3.0	1.85	605	65
45	**M3GP 280 SMB**	3GGP 284 220-••G	741	94.1	93.8	0.78	90	7.6	580	1.8	3.1	2.2	645	65
55	**M3GP 315 SMA**	3GGP 314 210-••G	742	94.1	94.0	0.81	104	7.1	708	1.6	2.7	3.2	830	62
75	**M3GP 315 SMB**	3GGP 314 220-••G	741	94.5	94.4	0.82	141	7.1	968	1.7	2.7	4.1	930	62
90	**M3GP 315 SMC**	3GGP 314 230-••G	741	94.8	94.7	0.82	167	7.4	1161	1.8	2.7	4.9	1000	64
110	**M3GP 315 MLA**	3GGP 314 410-••G	740	95.0	95.0	0.83	203	7.3	1420	1.8	2.7	5.8	1150	72
132	**M3GP 355 SMA**	3GGP 354 210-••G	744	95.7	95.6	0.80	250	7.5	1694	1.5	2.6	7.9	1520	69
160	**M3GP 355 SMB**	3GGP 354 220-••G	744	95.7	95.6	0.80	305	7.6	2054	1.6	2.6	9.7	1680	69
200	**M3GP 355 SMC**	3GGP 354 230-••G	743	95.7	95.6	0.80	378	7.4	2570	1.6	2.6	11.3	1820	69
250	**M3GP 355 MLB**	3GGP 354 420-••G	743	95.9	95.8	0.80	476	7.5	3213	1.6	2.7	13.5	2180	72
315	**M3GP 400 LKA**	3GGP 404 810-••G	744	96.4	96.3	0.81	582	7.0	4043	1.2	2.6	17	2900	71
315	**M3GP 400 LA**	3GGP 404 510-••G	744	96.4	96.3	0.81	582	7.0	4043	1.2	2.6	17	2900	71
355	**M3GP 400 LB**	3GGP 404 520-••G	743	96.5	96.5	0.83	640	6.8	4563	1.2	2.5	21	3200	71
355	**M3GP 400 LKB**	3GGP 404 820-••G	743	96.5	96.5	0.83	640	6.8	4563	1.2	2.5	21	3200	71
400	**M3GP 400 LC**	3GGP 404 530-••G	744	96.6	96.5	0.82	735	7.4	5134	1.3	2.7	24	3400	71
400	**M3GP 400 LKC**	3GGP 404 830-••G	744	96.6	96.5	0.82	735	7.4	5134	1.3	2.7	24	3400	71
750 r/min = 8-poles			**400 V 50 Hz**									**High-output design**		
18.5	**M3GP 200 MLB**	3GGP 204 420-••G	734	90.6	90.8	0.80	37.5	6.9	241	2.2	3.2	0.54	300	57
30 [1]	**M3GP 225 SMC**	3GGP 224 230-••G	731	90.6	91.0	0.77	63	6.3	392	2.3	3.0	0.75	375	59
37	**M3GP 250 SMB**	3GGP 254 220-••G	737	93.0	92.9	0.78	75	7.5	479	2.3	3.4	1.52	465	59
55	**M3GP 280 SMC**	3GGP 284 230-••G	741	94.4	94.3	0.80	105	7.9	709	1.9	3.1	2.85	725	65

[1] Temperature rise class F.
[2] -Nominal power lower than CENELEC + 1.

Dust ignition proof motors 56-280

Technical data for Category 3 D - T = 125°C - IP 55 - aluminum frame

IC 411; Insulation class F. temperature rise class B

Output kW 50 Hz	Motor type	Product code	Speed r/min	Efficiency at FL 100%	Efficiency at FL 75%	Power factor cos φ	Current I_N A	Current I_s/I_N	Torque T_N Nm	Torque T_s/T_N	Torque T_{max}/T_N	Moment of inertia J = 1/4 GD² kgm²	Weight kg	Sound pressure level L_P dB(A)
3000 r/min = 2-poles			**400 V 50 Hz**									**Basic design**		
0.09	**M2VAD 56 A**	3GVA 051 001-••A	2820	59.8	53.3	0.69	0.32	3.9	0.31	2.9	2.7	0.00011	3.2	48
0.12	**M2VAD 56 B**	3GVA 051 002-••A	2840	67.2	63.8	0.64	0.41	4.1	0.41	3.2	2.8	0.00012	3.4	48
0.18	**M2VAD 63 A**	3GVA 061 001-••C	2820	73.7	70.6	0.64	0.56	4.2	0.62	3.5	3.1	0.00013	3.9	54
0.25	**M2VAD 63 B**	3GVA 061 002-••C	2810	77.5	75.8	0.71	0.66	4.5	0.87	3.6	3.3	0.00016	4.4	54
0.37	**M2VAD 71 A**	3GVA 071 001-••C	2840	77.1	76.5	0.72	1	5.5	1.25	3.8	3.9	0.0004	5.5	58
0.55	**M2VAD 71 B**	3GVA 071 002-••C	2830	79.2	78.2	0.76	1.35	5.7	1.86	3.6	3.7	0.00045	6.5	58
0.75	**M2VAD 80 A**	3GVA 081 001-••B	2870	81.2	79.3	0.75	1.8	6.2	2.49	2.9	3.6	0.000722	9	60
1.1	**M2VAD 80 B**	3GVA 081 002-••B	2850	81.4	79.5	0.78	2.5	6.1	3.69	2.3	3.5	0.000763	11	60
1.5	**M3AAD 90 S**	3GAA 091 001-••E	2870	80.1	76.2	0.82	3.35	5.5	5	2.4	3.0	0.0019	13	63
2.2	**M3AAD 90 L**	3GAA 091 002-••E	2880	83.6	79.0	0.87	4.37	7.0	7.5	2.7	3.0	0.0024	16	63
3	**M3AAD 100 L**	3GAA 101 001-••E	2900	86.0	84.1	0.88	5.95	7.5	10	2.7	3.6	0.0041	21	65
4	**M3AAD 112 M**	3GAA 111 001-••B	2850	86.0	86.2	0.91	7.4	7.5	13.4	2.8	3.0	0.01	25	63
5.5	**M3AAD 132 SA**	3GAA 131 001-••B	2855	86.0	86.6	0.88	10.5	7.8	18.4	3.2	3.4	0.014	37	75
7.5	**M3AAD 132 SB**	3GAA 131 002-••B	2860	88.0	86.2	0.89	13.9	8.5	25.1	3.4	3.6	0.016	42	73
11	**M2AA 160 MA**	3GAA 161 111-••A	2915	88.4	88.9	0.89	20.5	6.1	36	2.1	2.5	0.039	73	73
11	**M3AA 160 MA**	3GAA 161 101-••C	2930	91.0	91.2	0.88	20	6.2	36	2.1	2.8	0.039	73	69
15	**M2AA 160 M**	3GAA 161 112-••A	2900	89.5	89.9	0.90	27	6.1	49.4	2.4	2.6	0.047	84	75
15	**M3AA 160 M**	3GAA 161 102-••C	2920	91.3	91.7	0.90	26.5	6.4	49	2.3	2.7	0.047	84	69
18.5	**M2AA 160 L**	3GAA 161 113-••A	2915	90.2	90.5	0.91	32.5	6.8	61	2.6	3.0	0.053	94	73
18.5	**M3AA 160 L**	3GAA 161 103-••C	2920	92.4	93.1	0.91	32	7.2	61	2.6	2.9	0.053	94	69
22	**M2AA 180 M**	3GAA 181 111-••A	2925	91.2	91.3	0.89	39	7.9	72	2.8	3.2	0.06	108	75
22	**M3AA 180 M**	3GAA 181 101-••C	2930	92.8	93.3	0.89	38.5	7.2	71	2.7	3.0	0.077	119	69
30	**M2AA 200 LA**	3GAA 201 011-••A	2945	92.0	92.0	0.88	53	7.9	97	3.0	3.7	0.094	139	75
30	**M3AA 200 MLA**	3GAA 201 001-••C	2955	93.2	93.2	0.88	53	8.5	97	2.9	3.1	0.15	175	72
37	**M2AA 200 L**	3GAA 201 012-••A	2945	92.8	92.9	0.89	65	8.2	120	3.1	3.6	0.115	170	75
37	**M3AA 200 MLB**	3GAA 201 002-••C	2950	93.6	93.7	0.89	64	7.2	120	2.3	2.9	0.18	200	72
45	**M2AA 225 M**	3GAA 221 011-••A	2940	93.0	93.0	0.88	80	7.7	146	2.8	3.0	0.21	209	75
45	**M3AA 225 SMB**	3GAA 221 001-••C	2960	94.1	93.9	0.88	79	7.7	145	2.5	2.9	0.26	235	74
55	**M2AA 250 M**	3GAA 251 011-••A	2960	93.5	93.8	0.90	95	7.3	177	2.8	3.0	0.31	277	74
55	**M3AA 250 SMA**	3GAA 251 001-••C	2970	94.2	93.8	0.89	95	7.9	177	2.4	3.0	0.49	285	75
75	**M3AA 280 SMA**	3GAA 281 001-••C	2970	94.7	94.4	0.90	127	8.2	241	2.7	3.2	0.57	375	75
3000 r/min = 2-poles			**400 V 50 Hz**									**High-output design**		
0.37	**M2VAD 63 BB**	3GVA 061 003-••C	2800	73.6	73.1	0.81	0.9	3.5	1.29	2.3	2.2	0.00036	4.9	54
0.68	**M2VAD 71 BB**	3GVA 071 003-••C	2800	78.9	77.4	0.82	1.59	5.2	2.33	3.2	3.3	0.00045	6.5	58
0.75	**M2VAD 71 BC**	3GVA 071 004-••C	2800	78.5	77.9	0.85	1.7	5.1	2.57	3.1	3.2	0.00045	6.5	58
1.5	**M2VAD 80 C**	3GVA 081 003-••B	2840	82.4	82.2	0.83	3.16	5.5	5.13	2.8	3.1	0.001093	11.5	60
2.7	[1] **M3AAD 90 LB**	3GAA 091 003-••E	2860	80.7	83.5	0.86	5.7	7.0	9	2.6	3.0	0.0027	18	68
4	[1] **M3AAD 100 LB**	3GAA 101 002-••E	2900	85.0	84.3	0.86	8.1	7.5	13	2.7	3.6	0.005	25	68
5.5	[1] **M3AAD 112 MB**	3GAA 111 002-••B	2855	86.5	87.1	0.93	9.9	7.3	18.4	2.7	2.9	0.012	33	66
9.2	[1] **M3AAD 132 SBB**	3GAA 131 004-••B	2825	86.0	88.2	0.93	16.6	7.3	31.1	3.2	3.5	0.022	57	74
11	[1] **M3AAD 132 SC**	3GAA 131 003-••B	2835	87.0	87.4	0.93	19.6	8.0	37	3.2	3.3	0.022	57	73
45	**M3AA 200 MLC**	3GAA 201 003-••C	2950	94.1	94.5	0.89	78	8.2	146	3.0	3.2	0.19	205	72
55	**M3AA 225 SMC**	3GAA 221 002-••C	2960	94.5	94.6	0.89	95	7.3	177	2.8	3.0	0.29	260	74
75	**M3AA 250 SMB**	3GAA 251 002-••C	2970	94.7	94.4	0.90	127	8.2	241	2.7	3.2	0.57	375	75

[1] Temperature rise class F

Note: When ordering motors, the following variant codes have to be added:

acc. to ATEX 452 'DIP/Ex tD acc. to ATEX directive 94/9/EC, T=125°C, ca. 3D, IP55'

acc. to IEC 804 'DIP/Ex tD, IEC 61241, T125°C, IP55 (zone 21)'

The two bullets in the product code indicate choice of mounting arrangement, voltage and frequency (see ordering information).

Motor sizes 56-100 are certified for the voltages 380-400 V 50 Hz; motor sizes 112-280 for 380-415 VD/660-690VY 50 Hz and 440 V 60 Hz acc. to IEC 60034-1. Values above are given for 400 V 50 Hz; data for other voltages < 500 V on request.

Dust ignition proof motors 56-280

Technical data for Category 3 D - T = 125°C - IP 55 - aluminum frame

IC 411; Insulation class F. temperature rise class B

Output kW 50 Hz	Motor type	Product code	Speed r/min	Efficiency at FL 100%	Efficiency at FL 75%	Power factor cos φ	Current I_N A	Current I_s/I_N	Torque T_N Nm	Torque T_s/T_N	Torque T_{max}/T_N	Moment of inertia J = 1/4 GD² kgm²	Weight kg	Sound pressure level L_p dB(A)
1500 r/min = 4-poles			**400 V 50 Hz**									**Basic design**		
0.06	**M2VAD 56 A**	3GVA 052 001-••A	1340	51.1	45.8	0.67	0.26	2.5	0.43	2.2	2.2	0.00017	3.2	36
0.09	**M2VAD 56 B**	3GVA 052 002-••A	1370	55.5	50.2	0.62	0.38	2.8	0.63	2.9	2.9	0.00018	3.4	36
0.12	**M2VAD 63 A**	3GVA 062 001-••C	1400	63.7	58.4	0.59	0.46	3.1	0.82	2.6	2.6	0.00019	4	40
0.18	**M2VAD 63 B**	3GVA 062 002-••C	1380	65.6	62.1	0.64	0.63	3.1	1.25	2.5	2.6	0.00026	4.5	40
0.25	**M2VAD 71 A**	3GVA 072 001-••C	1410	70.4	69.1	0.71	0.74	4.3	1.71	2.7	2.9	0.00066	5.5	45
0.37	**M2VAD 71 B**	3GVA 072 002-••C	1420	74.6	72.1	0.69	1.05	4.4	2.51	2.6	2.8	0.00089	6.5	45
0.55	**M2VAD 80 A**	3GVA 082 001-••B	1390	75.3	73.1	0.76	1.4	4.6	3.75	2.6	2.9	0.001257	9	50
0.75	**M2VAD 80 B**	3GVA 082 002-••B	1410	78.2	75.6	0.74	1.9	4.7	5.08	3.5	3.9	0.001565	10.5	50
1.1	**M3AAD 90 S**	3GAA 092 001-••E	1410	77.5	76.4	0.81	2.59	5.0	7.5	2.2	2.7	0.0032	13	50
1.5	**M3AAD 90 L**	3GAA 092 002-••E	1420	80.3	78.1	0.79	3.45	5.0	10	2.4	2.9	0.0043	16	50
2.2	**M3AAD 100 LA**	3GAA 102 001-••E	1430	83.0	82.7	0.81	4.8	5.5	15	2.4	2.9	0.0069	21	64
3	**M3AAD 100 LB**	3GAA 102 002-••E	1430	85.0	83.9	0.81	6.48	5.5	20	2.5	2.9	0.0082	24	66
4	**M3AAD 112 M**	3GAA 112 001-••B	1435	84.5	83.9	0.80	8.6	7.0	26.6	2.9	3.1	0.015	27	60
5.5	**M3AAD 132 S**	3GAA 132 001-••B	1450	87.0	87.7	0.83	11.1	7.3	36.2	2.2	3.0	0.031	40	66
7.5	**M3AAD 132 M**	3GAA 132 002-••B	1450	88.0	88.6	0.83	14.8	7.9	49.4	2.5	3.2	0.038	48	66
11	**M2AA 160 M**	3GAA 162 111-••A	1460	89.1	89.8	0.81	22	6.5	72	2.7	2.6	0.067	75	62
11	**M3AA 160 M**	3GAA 162 101-••C	1460	92.0	92.7	0.81	21.5	7.8	72	3.3	3.2	0.091	94	62
15	**M2AA 160 L**	3GAA 162 112-••A	1460	90.4	91.0	0.82	29	7.1	98	2.7	3.3	0.088	92	62
15	**M3AA 160 L**	3GAA 162 102-••C	1460	91.8	92.5	0.82	29	8.1	98	3.0	3.6	0.102	103	62
18.5	**M2AA 180 M**	3GAA 182 111-••A	1460	91.1	91.5	0.81	36.5	7.6	121	3.1	3.5	0.102	110	64
18.5	**M3AA 180 M**	3GAA 182 101-••C	1470	92.3	92.9	0.84	35	7.0	120	2.9	2.9	0.161	124	62
22	**M2AA 180 L**	3GAA 182 112-••A	1460	91.8	92.3	0.82	42	7.9	143	3.0	3.8	0.127	128	64
22	**M3AA 180 L**	3GAA 182 102-••C	1470	93.1	93.9	0.85	40	7.1	143	3.1	3.3	0.225	161	63
30	**M2AA 200 L**	3GAA 202 011-••A	1470	92.0	92.1	0.80	59	7.8	195	3.0	3.4	0.225	177	67
30	**M3AA 200 MLB**	3GAA 202 001-••C	1475	93.4	94.0	0.84	55	7.5	194	2.5	2.8	0.34	205	63
37	**M2AA 225 S**	3GAA 222 011-••A	1475	92.8	93.0	0.85	68	6.8	240	3.0	3.1	0.35	216	68
37	**M3AA 225 SMA**	3GAA 222 001-••C	1480	93.6	93.8	0.84	68	7.6	239	3.1	3.3	0.37	215	66
45	**M2AA 225 M**	3GAA 222 012-••A	1475	93.0	93.1	0.84	84	8.1	291	3.5	3.2	0.41	237	68
45	**M3AA 225 SMB**	3GAA 222 002-••C	1480	94.2	94.4	0.83	83	7.6	291	2.8	3.0	0.42	230	66
55	**M2AA 250 M**	3GAA 252 011-••A	1475	93.7	94.3	0.84	98	6.8	356	2.5	2.6	0.5	286	66
55	**M3AA 250 SMA**	3GAA 252 001-••C	1480	94.6	94.9	0.86	98	7.6	355	3.1	3.0	0.72	275	67
72	**M3AA 280 SMA**	3GAA 282 001-••C	1475	94.6	95.0	0.88	126	7.4	466	3.2	3.1	0.88	380	67
1500 r/min = 4-poles			**400 V 50 Hz**									**High-output design**		
0.25	**M2VAD 63 BB**	3GVA 062 003-••C	1370	70.3	67.4	0.67	0.78	3.2	1.75	2.5	2.1	0.0003	5	40
0.45	**M2VAD 71 BB**	3GVA 072 003-••C	1390	75.5	75.3	0.76	1.15	4.1	3.11	2.1	2.3	0.00089	6.5	45
0.55	**M2VAD 71 C**	3GVA 072 004-••C	1410	77.3	76.9	0.73	1.45	4.8	3.74	2.7	2.9	0.0011	7	45
0.95	**M2VAD 80 C**	3GVA 082 003-••B	1410	78.9	77.9	0.75	2.35	4.3	6.44	2.9	3.3	0.001948	11	50
1.1	**M2VAD 80 C**	3GVA 082 004-••B	1390	74.7	76.6	0.77	2.8	4.3	7.8	3.1	2.3	0.001948	11	50
1.85	[1] **M3AAD 90 L**	3GAA 092 003-••E	1390	79.5	78.1	0.80	4.4	4.5	13	2.2	2.4	0.0043	16	50
2.2	[1] **M3AAD 90 LB**	3GAA 092 004-••E	1390	80.3	81.0	0.83	4.85	4.5	15	2.2	2.4	0.0048	17	50
4	[1] **M3AAD 100 LC**	3GAA 102 003-••E	1420	81.0	81.7	0.82	8.65	5.5	27	2.5	2.8	0.009	25	60
5.5	[1] **M3AAD 112 MB**	3GAA 112 002-••B	1425	84.5	83.5	0.83	11.4	7.1	36.9	2.8	3.1	0.018	34	60
9.2	[1] **M3AAD 132 MBA**	3GAA 132 004-••B	1450	88.0	88.6	0.85	17.8	7.3	60	2.0	2.8	0.048	59	63
11	[1] **M3AAD 132 MB**	3GAA 132 003-••B	1450	88.0	89.4	0.86	21	8.3	72	2.5	2.7	0.048	59	66
55	**M3AA 225 SMC**	3GAA 222 003-••C	1480	94.6	95.0	0.84	100	7.5	356	3.5	3.0	0.49	265	66
72	**M3AA 250 SMB**	3GAA 252 002-••C	1475	94.6	95.0	0.88	126	7.4	466	3.2	3.1	0.88	335	67

[1] Temperature rise class F

Note: When ordering motors, the following variant codes have to be added:

acc. to ATEX 452 'DIP/Ex tD acc. to ATEX directive 94/9/EC, T=125°C, ca. 3D, IP55'

acc. to IEC 804 'DIP/Ex tD, IEC 61241, T125°C, IP55 (zone 21)'

The two bullets in the product code indicate choice of mounting arrangement, voltage and frequency (see ordering information).

Motor sizes 56-100 are certified for the voltages 380-400 V 50 Hz; motor sizes 112-280 for 380-415 VD/660-690VY 50 Hz and 440 V 60 Hz acc. to IEC 60034-1. Values above are given for 400 V 50 Hz; data for other voltages < 500 V on request.

Dust ignition proof motors 56-280

Technical data for Category 3 D - T = 125°C - IP 55 - aluminum frame

IC 411; Insulation class F. temperature rise class B

Output kW 50 Hz	Motor type	Product code	Speed r/min	Efficiency at FL 100%	Efficiency at FL 75%	Power factor cos φ	Current I_N A	Current I_s/I_N	Torque T_N Nm	Torque T_s/T_N	Torque T_{max}/T_N	Moment of inertia J = 1/4 GD² kgm²	Weight kg	Sound pressure level L_P dB(A)
1000 r/min = 6-poles			**400 V 50 Hz**									**Basic design**		
0.09	**M2VAD 63 A**	3GVA 063 001-••C	910	47.1	42.5	0.56	0.51	2.1	0.95	2.1	2.1	0.0002	4	38
0.12	**M2VAD 63 B**	3GVA 063 002-••C	910	57.5	54.0	0.58	0.54	2.1	1.27	2.1	2.1	0.00027	4.5	38
0.18	**M2VAD 71 A**	3GVA 073 001-••C	920	61.1	57.7	0.69	0.64	2.9	1.88	2.1	2.2	0.00063	5.5	42
0.25	**M2VAD 71 B**	3GVA 073 002-••C	920	64.9	62.3	0.65	0.86	3.2	2.61	2.5	2.7	0.00081	6.5	42
0.37	**M2VAD 80 A**	3GVA 083 001-••B	925	72.9	70.8	0.72	1.04	3.8	3.82	3.1	3.4	0.001842	9	47
0.55	**M2VAD 80 B**	3GVA 083 002-••B	925	73.3	71.9	0.71	1.55	3.4	5.68	2.9	3.1	0.002176	10	47
0.75	**M3AAD 90 S**	3GAA 093 001-••E	930	71.5	70.7	0.67	2.36	4.0	7.5	1.9	2.3	0.0032	13	44
1.1	**M3AAD 90 L**	3GAA 093 002-••E	930	74.4	72.5	0.69	3.25	4.0	11	2.1	2.4	0.0043	16	44
1.5	**M3AAD 100 L**	3GAA 103 001-••E	950	80.0	77.0	0.71	3.92	4.5	15	1.9	2.3	0.0082	23	49
2.2	**M3AAD 112 M**	3GAA 113 001-••B	940	80.5	79.3	0.74	5.4	5.6	22.3	2.1	2.7	0.015	27	66
3	**M3AAD 132 S**	3GAA 133 001-••B	960	84.5	82.7	0.75	6.9	6.1	29.8	2.0	2.6	0.031	39	57
4	**M3AAD 132 MA**	3GAA 133 002-••B	960	85.5	83.1	0.78	8.7	7.1	39.7	2.0	2.8	0.038	46	61
5.5	**M3AAD 132 MB**	3GAA 133 003-••B	955	86.0	85.0	0.78	11.9	6.9	55	2.2	2.8	0.045	54	57
7.5	**M3AA 160 M**	3GAA 163 101-••C	970	89.3	90.4	0.79	15.4	6.6	74	1.9	2.6	0.089	88	59
11	**M3AA 160 L**	3GAA 163 102-••C	970	89.8	90.5	0.78	23	6.9	109	2.1	3.4	0.107	102	59
15	**M3AA 180 L**	3GAA 183 101-••C	970	90.8	91.5	0.78	31	6.8	147	2.0	3.3	0.217	151	59
18.5	**M3AA 200 MLA**	3GAA 203 001-••C	985	91.1	91.7	0.81	36	7.0	180	2.7	2.5	0.37	165	63
22	**M3AA 200 MLB**	3GAA 203 002-••C	980	91.7	92.2	0.81	43	6.8	214	2.9	3.0	0.43	185	63
30	**M3AA 225 SMB**	3GAA 223 001-••C	985	92.8	93.0	0.83	56	7.4	290	3.2	2.8	0.64	225	63
37	**M3AA 250 SMA**	3GAA 253 001-••C	985	93.4	93.7	0.83	69	7.2	358	3.2	2.9	1.16	280	63
45 [1]	**M3AA 280 SMA**	3GAA 283 001-••C	985	93.4	93.7	0.84	83	7.2	436	3.2	2.8	1.49	375	63
1000 r/min = 6-poles			**400 V 50 Hz**									**High-output design**		
0.15	**M2VAD 63 BB**	3GVA 063 003-••C	900	56.9	52.1	0.54	0.74	2.2	1.61	2.2	2.3	0.00032	5	38
0.32	**M2VAD 71 C**	3GVA 073 003-••C	920	64.8	61.6	0.63	1.15	3.2	3.33	2.6	2.8	0.0011	7	42
0.37	**M2VAD 71 C**	3GVA 073 004-••C	900	60.1	60.4	0.70	1.2	2.6	4.1	2.2	2.0	0.0011	7	42
0.75	**M2VAD 80 C**	3GVA 083 003-••B	920	67.9	70.5	0.76	2.1	3.4	8.1	2.4	2.2	0.002576	10	47
1.3 [1]	**M3AAD 90 LB**	3GAA 093 003-••E	910	69.0	69.0	0.71	3.85	4.0	13.5	1.9	2.2	0.0048	18	44
2.2 [1]	**M3AAD 100 LC**	3GAA 103 002-••E	940	77.0	72.8	0.71	5.9	4.5	22	1.9	2.3	0.009	26	49
3 [1]	**M3AAD 112 MB**	3GAA 113 002-••B	935	80.0	79.9	0.76	7.2	5.5	30.6	2.0	2.7	0.018	33	55
6.5 [1]	**M3AAD 132 MC**	3GAA 133 004-••B	960	85.0	84.5	0.75	14.8	6.6	64	2.0	2.7	0.049	59	61
37	**M3AA 225 SMC**	3GAA 223 002-••C	985	93.0	93.6	0.83	69	7.3	360	3.6	2.8	0.75	252	63
45 [1]	**M3AA 250 SMB**	3GAA 253 002-••C	985	93.4	93.7	0.84	83	7.2	436	3.2	2.8	1.49	320	63

[1] Temperature rise class F

Note: When ordering motors, the following variant codes have to be added:

acc. to ATEX 452 'DIP/Ex tD acc. to ATEX directive 94/9/EC, T=125°C, ca. 3D, IP55'

acc. to IEC 804 'DIP/Ex tD, IEC 61241, T125°C, IP55 (zone 21)'

The two bullets in the product code indicate choice of mounting arrangement, voltage and frequency (see ordering information).

Motor sizes 56-100 are certified for the voltages 380-400 V 50 Hz; motor sizes 112-280 for 380-415 VD/660-690VY 50 Hz and 440 V 60 Hz acc. to IEC 60034-1. Values above are given for 400 V 50 Hz; data for other voltages < 500 V on request.

Dust ignition proof motors 56-280

Technical data for Category 3 D - T = 125°C - IP 55 - aluminum frame

IC 411; Insulation class F. temperature rise class B

Output kW 50 Hz	Motor type	Product code	Speed r/min	Efficiency at FL 100%	Efficiency at FL 75%	Power factor cos φ	Current I_N A	Current I_s/I_N	Torque T_N Nm	Torque T_s/T_N	Torque T_{max}/T_N	Moment of inertia J = 1/4 GD² kgm²	Weight kg	Sound pressure level L_P dB(A)
750 r/min = 8-poles			**400 V 50 Hz**									**Basic design**		
0.055	**M2VAD 63 B**	3GVA 064 002-••C	680	38.3	31.8	0.48	0.45	1.8	0.78	2.1	2.1	0.00027	4.5	36
0.09	**M2VAD 71 A**	3GVA 074 001-••C	690	45.8	37.5	0.57	0.52	2.2	1.25	2.3	2.3	0.00063	5.5	40
0.12	**M2VAD 71 B**	3GVA 074 002-••C	690	46.4	38.1	0.55	0.69	2.2	1.67	2.5	2.5	0.00081	6.5	40
0.18	**M2VAD 80 A**	3GVA 084 001-••B	700	59.9	54.5	0.60	0.75	3.1	2.46	3.2	3.6	0.001842	9	45
0.25	**M2VAD 80 B**	3GVA 084 002-••B	700	70.7	67.4	0.62	0.85	3.1	3.52	2.9	3.1	0.002176	10	45
0.37	**M3AAD 90 S**	3GAA 094 001-••E	700	61.5	43.4	0.56	1.6	3.0	5	1.9	2.4	0.0032	13	43
0.55	**M3AAD 90 L**	3GAA 094 002-••E	690	62.9	56.4	0.57	2.35	3.0	7.5	1.7	2.1	0.0043	16	43
0.75	**M3AAD 100 LA**	3GAA 104 001-••E	700	72.0	63.6	0.59	2.55	3.5	10	2.1	2.7	0.0069	20	46
1.1	**M3AAD 100 LB**	3GAA 104 002-••E	700	73.0	68.8	0.64	3.35	3.5	15	2.1	2.7	0.0082	23	46
1.5	**M3AAD 112 M**	3GAA 114 001-••B	695	74.5	75.9	0.65	4.5	4.1	20.6	1.9	2.4	0.016	28	52
2.2	**M3AAD 132 S**	3GAA 134 001-••B	720	80.5	77.8	0.67	5.9	5.3	29.2	1.6	2.5	0.038	46	56
3	**M3AAD 132 M**	3GAA 134 002-••B	720	82.0	79.2	0.68	7.8	5.5	39.8	1.8	2.5	0.045	53	56
4	**M3AA 160 MA**	3GAA 164 101-••C	715	84.1	84.7	0.69	10	5.1	53	2.1	2.6	0.072	75	59
5.5	**M3AA 160 M**	3GAA 164 102-••C	710	84.7	85.6	0.70	13.4	5.5	74	2.4	2.6	0.091	88	59
7.5	**M3AA 160 L**	3GAA 164 103-••C	715	86.3	87.3	0.70	18.1	5.4	100	2.4	2.7	0.131	118	59
11	**M3AA 180 L**	3GAA 184 101-••C	720	89.6	90.3	0.76	23.5	5.7	146	2.1	2.5	0.224	147	59
15	**M3AA 200 MLA**	3GAA 204 001-••C	740	91.1	91.6	0.82	29	7.5	196	3.0	3.2	0.45	175	60
18.5	**M3AA 225 SMA**	3GAA 224 001-••C	730	91.1	91.6	0.79	37	6.8	242	2.8	3.1	0.61	210	63
22	**M3AA 225 SMB**	3GAA 224 002-••C	730	91.5	92.2	0.77	45	6.4	287	2.4	2.6	0.68	225	63
30	**M3AA 250 SMA**	3GAA 254 001-••C	735	92.8	93.1	0.79	59	7.3	389	2.2	2.6	1.25	280	63
37	**M3AA 280 SMA**	3GAA 284 001-••C	735	93.0	93.3	0.81	74	7.4	478	2.9	3.1	1.52	375	63
750 r/min = 8-poles			**400 V 50 Hz**									**High-output design**		
0.18	**M2VAD 71 C**	3GVA 074 003-••C	680	51.3	49.9	0.61	0.8	2.2	2.6	2.5	2.2	0.0011	7	40
0.37	**M2VAD 80 C**	3GVA 084 003-••B	690	64.6	65.3	0.69	1.2	3.0	5.3	2.3	2.1	0.002576	11	45
0.75	[1] **M3AAD 90 LB**	3GAA 094 003-••E	680	64.0	60.0	0.65	2.65	3.0	10	1.8	2.0	0.0048	18	43
2	[1] **M3AAD 112 MB**	3GAA 114 002-••B	685	73.5	68.4	0.67	5.9	4.4	27.9	1.9	2.2	0.018	33	52
3.8	[1] **M3AAD 132 MB**	3GAA 134 003-••B	710	80.5	78.3	0.69	9.9	5.2	51	1.8	2.3	0.049	59	56
18.5	**M3AA 200 MLB**	3GAA 204 002-••C	735	91.4	91.8	0.81	36	7.3	241	2.6	3.1	0.54	200	60
37	**M3AA 250 SMB**	3GAA 254 002-••C	735	93.0	93.3	0.81	74	7.4	479	2.0	2.6	1.52	320	63

[1] Temperature rise class F

Note: When ordering motors, the following variant codes have to be added:

acc. to ATEX 452 'DIP/Ex tD acc. to ATEX directive 94/9/EC, T=125°C, ca. 3D, IP55'

acc. to IEC 804 'DIP/Ex tD, IEC 61241, T125°C, IP55 (zone 21)'

The two bullets in the product code indicate choice of mounting arrangement, voltage and frequency (see ordering information).

Motor sizes 56-100 are certified for the voltages 380-400 V 50 Hz; motor sizes 112-280 for 380-415 VD/660-690VY 50 Hz and 440 V 60 Hz acc. to IEC 60034-1. Values above are given for 400 V 50 Hz; data for other voltages < 500 V on request.

Dust ignition proof motors 71-400

Technical data for Category 3 D - T = 125°C - IP 55 - cast iron frame

ATEX Certified

IC 411; Insulation class F. temperature rise class B

Output kW 50 Hz		Motor type			Product code	Speed r/min	Efficiency at FL 100%	Efficiency at FL 75%	Power factor cos φ	Current I_N A	Current I_s/I_N	Torque T_N Nm	Torque T_s/T_N	Torque T_{max}/T_N	Moment of inertia J=1/4 GD² kgm²	Weight kg	Sound pressure level L_P dB(A)
3000 r/min = 2-poles					**400 V 50 Hz**										**Basic design**		
0.37		**M2GP**	**71**	**MA**	3GGP 071 310-••A	2807	71.4	69.4	0.81	0.88	4.9	1.25	2.5	2.6	0.0003	10	56
0.55		**M2GP**	**71**	**MB**	3GGP 071 320-••A	2789	74.2	73.6	0.82	1.26	5.0	1.9	2.5	2.6	0.00037	11	56
0.75		**M2GP**	**80**	**MA**	3GGP 081 310-••A	2840	76.1	76.6	0.85	1.7	6.1	2.52	2.2	3.0	0.00091	16	57
1.1		**M2GP**	**80**	**MB**	3GGP 081 320-••A	2855	79.0	78.9	0.85	2.4	7.0	3.68	2.2	2.2	0.00107	17	58
1.5		**M2GP**	**90**	**SA**	3GGP 091 110-••A	2850	79.9	79.9	0.87	3.15	7.0	5.03	2.2	2.5	0.00135	21	61
2.2		**M2GP**	**90**	**LA**	3GGP 091 510-••A	2850	82.3	82.6	0.86	4.53	7.0	7.37	2.2	3.5	0.00163	24	61
3		**M2GP**	**100**	**LA**	3GGP 101 510-••A	2860	83.8	84.0	0.88	5.93	7.0	10.02	2.2	3.0	0.00402	33	65
4		**M2GP**	**112**	**MA**	3GGP 111 310-••A	2900	85.7	85.3	0.90	7.55	7.0	13.17	2.2	3.2	0.00671	42	67
5.5		**M2GP**	**132**	**SA**	3GGP 131 110-••A	2907	87.6	87.8	0.87	10.4	7.4	18	1.8	2.7	0.01241	58	70
7.5		**M2GP**	**132**	**SB**	3GGP 131 120-••A	2920	89.0	90.5	0.90	13.6	7.0	24.53	2.2	3.5	0.01491	63	70
11		**M3GP**	**160**	**MLA**	3GGP 161 410-••G	2936	91.5	91.4	0.87	20	7.2	36	2.9	3.3	0.039	147	71
15		**M3GP**	**160**	**MLB**	3GGP 161 420-••G	2934	91.9	91.8	0.88	28	7.5	49	3.1	3.5	0.047	156	71
18.5		**M3GP**	**160**	**MLC**	3GGP 161 430-••G	2934	92.6	92.7	0.90	33	7.5	60	2.8	3.4	0.054	167	71
22		**M3GP**	**180**	**MLA**	3GGP 181 410-••G	2938	92.8	92.9	0.90	39	6.9	72	2.5	3.1	0.077	194	71
30		**M3GP**	**200**	**MLA**	3GGP 201 410-••G	2946	94.2	94.3	0.88	54	7.4	97	3.0	3.2	0.15	275	74
37		**M3GP**	**200**	**MLC**	3GGP 201 430-••G	2948	94.3	94.2	0.89	65	7.5	120	2.8	3.2	0.19	305	75
45		**M3GP**	**225**	**SMB**	3GGP 221 220-••G	2968	94.8	94.7	0.87	79	7.2	145	2.7	3.0	0.26	365	76
55		**M3GP**	**250**	**SMA**	3GGP 251 210-••G	2970	94.7	94.5	0.88	96	7.7	177	2.4	3.1	0.49	425	75
75		**M3GP**	**280**	**SMA**	3GGP 281 210-••G	2978	94.8	94.3	0.88	131	7.6	240	2.1	3.0	0.8	625	77
90		**M3GP**	**280**	**SMB**	3GGP 281 220-••G	2976	95.1	94.8	0.90	152	7.4	289	2.1	2.9	0.9	665	77
110		**M3GP**	**315**	**SMA**	3GGP 311 210-••G	2982	95.1	94.4	0.86	194	7.6	352	2.0	3.0	1.2	880	78
132		**M3GP**	**315**	**SMB**	3GGP 311 220-••G	2982	95.5	95.0	0.88	228	7.4	423	2.2	3.0	1.4	940	78
160		**M3GP**	**315**	**SMC**	3GGP 311 230-••G	2981	96.1	95.6	0.89	269	7.5	513	2.3	3.0	1.7	1025	78
200		**M3GP**	**315**	**MLA**	3GGP 311 410-••G	2980	96.3	95.9	0.90	336	7.7	641	2.6	3.0	2.1	1190	78
250	2)	**M3GP**	**355**	**SMA**	3GGP 351 210-••G	2984	96.4	95.9	0.89	425	7.7	800	2.1	3.3	3	1600	83
315	2)	**M3GP**	**355**	**SMB**	3GGP 351 220-••G	2980	96.6	96.3	0.89	535	7.0	1009	2.1	3.0	3.4	1680	83
355	2)	**M3GP**	**355**	**SMC**	3GGP 351 230-••G	2984	96.8	96.5	0.88	604	7.2	1136	2.2	3.0	3.6	1750	83
400	2)	**M3GP**	**355**	**MLA**	3GGP 351 410-••G	2982	96.9	96.7	0.88	680	7.1	1281	2.3	2.9	4.1	2000	83
450	2)	**M3GP**	**355**	**MLB**	3GGP 351 420-••G	2983	97.1	97.0	0.90	750	7.9	1441	2.2	2.9	4.3	2080	83
500	2)	**M3GP**	**355**	**LKA**	3GGP 351 810-••G	2982	97.1	97.0	0.90	830	7.5	1601	2.1	3.5	4.8	2320	83
560	3)	**M3GP**	**400**	**LA**	3GGP 401 510-••G	2988	97.2	97.0	0.89	940	7.8	1790	2.1	3.4	7.9	2950	82
560	2)	**M3GP**	**355**	**LKB**	3GGP 351 820-••G	2982	97.2	97.1	0.90	930	8.0	1793	2.3	3.6	5.2	2460	83
560	3)	**M3GP**	**400**	**LKA**	3GGP 401 810-••G	2988	97.2	97.0	0.89	940	7.8	1790	2.1	3.4	7.9	2950	82
630	3)	**M3GP**	**400**	**LB**	3GGP 401 520-••G	2987	97.4	97.3	0.89	1055	7.8	2014	2.2	3.4	8.2	3050	82
630	3)	**M3GP**	**400**	**LKB**	3GGP 401 820-••G	2987	97.4	97.3	0.89	1055	7.8	2014	2.2	3.4	8.2	3050	82
710	3)	**M3GP**	**400**	**LKC**	3GGP 401 830-••G	2987	97.5	97.4	0.89	1185	7.8	2270	2.6	3.4	9.3	3300	82
710	3)	**M3GP**	**400**	**LC**	3GGP 401 530-••G	2987	97.5	97.4	0.89	1185	7.8	2270	2.6	3.4	9.3	3300	82
3000 r/min = 2-poles						**400 V 50 Hz**									**High-output design**		
22		**M3GP**	**160**	**MLD**	3GGP 161 440-••G	2929	91.7	91.6	0.90	39	7.4	72	2.8	3.4	0.059	173	77
30		**M3GP**	**180**	**MLB**	3GGP 181 420-••G	2944	93.0	92.9	0.88	54	7.5	97	2.8	3.5	0.092	210	78
37	4)	**M3GP**	**180**	**MLC**	3GGP 181 430-••G	2947	93.9	93.9	0.89	65	7.9	120	2.9	3.6	0.114	229	78
45	5)	**M3GP**	**200**	**MLE**	3GGP 201 450-••G	2944	93.9	94.0	0.88	79	7.3	146	2.9	3.1	0.22	310	79
55		**M3GP**	**225**	**SMC**	3GGP 221 230-••G	2965	94.5	94.2	0.88	96	7.1	177	2.6	3.0	0.29	385	80
67	4)5)	**M3GP**	**225**	**SMD**	3GGP 221 240-••G	2966	94.6	94.1	0.86	120	7.4	216	2.8	3.2	0.31	395	78
75		**M3GP**	**250**	**SMB**	3GGP 251 220-••G	2969	95.2	95.1	0.89	129	7.9	241	2.6	3.2	0.57	465	80
110		**M3GP**	**280**	**SMC**	3GGP 281 230-••G	2978	95.7	95.3	0.90	185	7.9	353	2.4	3.0	1.15	725	77

Notes:

When ordering motors, the following variant codes has to be added: acc. to needs 452 'DIP/Ex tD acc. to ATEX directive 94/9/EC, T= 125°C, category 3 D, IP 55'. 804 DIP/Ex tD, IEC 61241, T125°C, IP55 (zone 22)

The two bullets in the product code indicate choice of mounting arrangement (see ordering information), voltage and frequency (below).

Values above are given for 400 V 50 Hz; data for other voltages on request.

Dust ignition proof motors 71-400

Technical data for Category 3 D - T = 125°C - IP 55 - cast iron frame

ATEX Certified

IC 411; Insulation class F. temperature rise class B

Output kW 50 Hz		Motor type			Product code	Speed r/min	Efficiency at FL 100%	Efficiency at FL 75%	Power factor cos φ	Current I_N A	Current I_s/I_N	Torque T_N Nm	Torque T_s/T_N	Torque T_{max}/T_N	Moment of inertia J=1/4 GD² kgm²	Weight kg	Sound pressure level L_P dB(A)
1500 r/min = 4-poles						**400 V 50 Hz**									**Basic design**		
0.25		**M2GP**	**71**	**MA**	3GGP 072 310-••A	1373	67.1	65.0	0.73	0.74	4.0	1.7	2.2	2.6	0.00053	11	43
0.37		**M2GP**	**71**	**MB**	3GGP 072 320-••A	1398	71.8	71.7	0.76	1.01	4.1	2.5	2.2	2.6	0.00066	11	45
0.55		**M2GP**	**80**	**MA**	3GGP 082 310-••A	1422	74.7	72.7	0.73	1.4	5.0	3.7	2.5	2.8	0.00145	16	46
0.75		**M2GP**	**80**	**MB**	3GGP 082 320-••A	1405	75.6	76.3	0.76	1.87	4.7	5.1	2.5	2.6	0.00174	17	46
1.1		**M2GP**	**90**	**SA**	3GGP 092 110-••A	1400	78.5	78.8	0.79	2.65	6.0	7.5	2.3	2.4	0.00254	21	52
1.5		**M2GP**	**90**	**LA**	3GGP 092 510-••A	1390	79.5	80.1	0.80	3.5	6.0	10.31	2.3	2.6	0.00317	25	52
2.2		**M2GP**	**100**	**LA**	3GGP 102 510-••A	1419	82.3	83.1	0.81	5.12	5.6	14.8	2.8	3.4	0.00679	32	53
4		**M2GP**	**112**	**MA**	3GGP 112 310-••A	1430	85.7	85.3	0.82	8.29	6.5	26.71	2.3	2.8	0.01306	45	56
5.5		**M2GP**	**132**	**SA**	3GGP 132 110-••A	1430	86.6	87.7	0.85	10.9	6.5	36.73	2.3	2.9	0.02673	60	59
7.5		**M2GP**	**132**	**MA**	3GGP 132 310-••A	1440	89.0	88.8	0.85	14.4	6.5	49.74	2.3	2.7	0.03432	73	59
11		**M3GP**	**160**	**MLC**	3GGP 162 430-••G	1470	91.6	91.6	0.82	22.5	7.7	71	3.1	3.6	0.09	166	62
15		**M3GP**	**160**	**MLE**	3GGP 162 450-••G	1467	92.3	92.3	0.83	30	7.6	98	3.1	3.6	0.121	189	62
18.5		**M3GP**	**180**	**MLA**	3GGP 182 410-••G	1474	92.7	92.8	0.82	36	7.3	120	2.7	3.2	0.176	206	62
22		**M3GP**	**180**	**MLB**	3GGP 182 420-••G	1471	92.8	92.9	0.82	42	7.1	143	2.6	3.0	0.191	214	62
30		**M3GP**	**200**	**MLB**	3GGP 202 420-••G	1475	93.7	93.8	0.84	56	7.4	194	3.3	3.0	0.34	305	61
37		**M3GP**	**225**	**SMB**	3GGP 222 220-••G	1480	93.8	93.6	0.84	69	7.7	239	3.2	2.9	0.42	355	67
45		**M3GP**	**225**	**SMC**	3GGP 222 230-••G	1477	94.6	94.6	0.86	81	7.4	291	3.2	2.7	0.49	390	67
55		**M3GP**	**250**	**SMA**	3GGP 252 210-••G	1479	94.7	94.8	0.83	101	7.2	355	2.5	3.1	0.72	415	66
75		**M3GP**	**280**	**SMA**	3GGP 282 210-••G	1484	94.9	94.8	0.85	135	6.9	483	2.5	2.8	1.25	625	68
90		**M3GP**	**280**	**SMB**	3GGP 282 220-••G	1483	95.3	95.3	0.86	159	7.2	580	2.5	2.7	1.5	665	68
110		**M3GP**	**315**	**SMA**	3GGP 312 210-••G	1487	95.6	95.4	0.86	193	7.2	706	2.0	2.5	2.3	900	70
132		**M3GP**	**315**	**SMB**	3GGP 312 220-••G	1487	95.8	95.7	0.86	232	7.1	848	2.3	2.7	2.6	960	70
160		**M3GP**	**315**	**SMC**	3GGP 312 230-••G	1487	96.0	95.9	0.85	287	7.2	1028	2.4	2.9	2.9	1000	70
200		**M3GP**	**315**	**MLA**	3GGP 312 410-••G	1486	96.2	96.2	0.86	351	7.2	1285	2.5	2.9	3.5	1160	70
250		**M3GP**	**355**	**SMA**	3GGP 352 210-••G	1488	96.5	96.4	0.86	438	7.1	1604	2.3	2.7	5.9	1610	74
315		**M3GP**	**355**	**SMB**	3GGP 352 220-••G	1488	96.7	96.6	0.86	550	7.3	2022	2.3	2.8	6.9	1780	74
355		**M3GP**	**355**	**SMC**	3GGP 352 230-••G	1487	96.7	96.6	0.86	616	6.8	2280	2.4	2.7	7.2	1820	78
400		**M3GP**	**355**	**MLA**	3GGP 352 410-••G	1489	96.9	96.7	0.85	700	6.8	2565	2.3	2.6	8.4	2140	78
450		**M3GP**	**355**	**MLB**	3GGP 352 420-••G	1490	96.9	96.7	0.86	784	6.9	2884	2.3	2.9	8.4	2140	78
500		**M3GP**	**355**	**LKA**	3GGP 352 810-••G	1490	97.0	96.9	0.86	875	6.8	3204	2.0	3.0	10	2500	78
560		**M3GP**	**400**	**LKA**	3GGP 402 810-••G	1491	97.1	97.0	0.85	980	7.4	3587	2.4	3.0	15	3200	78
560		**M3GP**	**400**	**LA**	3GGP 402 510-••G	1491	97.1	97.0	0.85	980	7.4	3587	2.4	3.0	15	3200	78
630		**M3GP**	**400**	**LB**	3GGP 402 520-••G	1491	97.1	97.0	0.87	1085	7.6	4035	2.2	3.1	16	3300	78
630		**M3GP**	**400**	**LKB**	3GGP 402 820-••G	1491	97.1	97.0	0.87	1085	7.6	4035	2.2	3.1	16	3300	78
710	1)	**M3GP**	**400**	**LKC**	3GGP 402 830-••G	1491	97.2	97.1	0.86	1240	7.6	4547	2.4	3.2	17	3400	78
710	1)	**M3GP**	**400**	**LC**	3GGP 402 530-••G	1491	97.2	97.1	0.86	1240	7.6	4547	2.4	3.2	17	3400	78
1500 r/min = 4-poles						**400 V 50 Hz**									**High-output design**		
18.5		**M3GP**	**160**	**MLF**	3GGP 162 460-••G	1469	92.5	92.8	0.83	36.5	8.0	120	3.2	3.6	0.121	189	68
22	4)	**M3GP**	**160**	**MLG**	3GGP 162 470-••G	1466	92.1	92.2	0.81	44.5	8.2	143	3.3	3.6	0.121	189	68
30	1)	**M3GP**	**180**	**MLC**	3GGP 182 430-••G	1473	92.5	92.5	0.81	59	7.8	194	3.1	3.4	0.239	233	66
37		**M3GP**	**200**	**MLC**	3GGP 202 430-••G	1475	93.5	93.5	0.82	70	7.5	239	3.5	3.2	0.34	305	73
55	5)	**M3GP**	**225**	**SMD**	3GGP 222 240-••G	1476	94.2	94.1	0.85	100	7.6	356	3.4	2.8	0.49	390	74
60	4)5)	**M3GP**	**225**	**SME**	3GGP 222 250-••G	1479	94.2	94.0	0.84	110	8.0	387	3.6	3.0	0.55	410	74
75	5)	**M3GP**	**250**	**SMB**	3GGP 252 220-••G	1476	94.8	95.0	0.86	133	7.6	485	2.8	3.2	0.88	470	73
110		**M3GP**	**280**	**SMC**	3GGP 282 230-••G	1485	95.7	95.7	0.86	195	7.6	707	3.0	3.0	1.85	725	68

1) Temperature rise class F.
2) -3dB(A) sound pressure level reduction with unidirectional fan construction. Direction of rotation must be stated when ordering, see variant codes 044 and 045.
3) Unidirectional fan construction as standard. Direction of rotation must be stated when ordering, see variant codes 044 and 045.
4) The output exceeds one step higher output than the basic with rated output acc. to CENELEC.
5) For 400-415 V 50 Hz (380 V 50 Hz voltage code B).

Dust ignition proof motors 71-400

Technical data for Category 3 D - T = 125°C - IP 55 - cast iron frame

ATEX Certified

IC 411; Insulation class F. temperature rise class B

Output kW 50 Hz	Motor type			Product code	Speed r/min	Efficiency at FL 100%	Efficiency at FL 75%	Power factor cos φ	Current I_N A	Current I_s/I_N	Torque T_N Nm	Torque T_s/T_N	Torque T_{max}/T_N	Moment of inertia J=1/4 GD² kgm²	Weight kg	Sound pressure level L_P dB(A)
1000 r/min = 6-poles					**400 V 50 Hz**									**Basic design**		
0.18	**M2GP**	**71**	**MA**	3GGP 073 310-••A	901	57.0	52.3	0.66	0.64	3.0	1.9	2.1	2.3	0.00056	10	42
0.25	**M2GP**	**71**	**MB**	3GGP 073 320-••A	887	61.8	60.2	0.66	0.87	3.0	2.7	2.2	2.3	0.00074	11	42
0.37	**M2GP**	**80**	**MA**	3GGP 083 310-••A	942	64.7	64.9	0.67	1.16	3.3	3.8	1.8	2.4	0.00159	17	45
0.55	**M2GP**	**80**	**MB**	3GGP 083 320-••A	927	66.6	66.7	0.69	1.72	3.3	5.7	1.7	2.2	0.00196	18	45
0.75	**M2GP**	**90**	**SA**	3GGP 093 110-••A	920	72.3	71.5	0.73	2.12	5.0	7.79	2.0	2.3	0.00292	21	48
1.1	**M2GP**	**90**	**LA**	3GGP 093 510-••A	920	74.2	74.3	0.75	2.94	5.0	11.42	2.0	2.6	0.00379	25	48
1.5	**M2GP**	**100**	**LA**	3GGP 103 510-••A	940	77.1	76.4	0.78	3.78	5.5	15.24	2.0	2.4	0.00999	32	51
2.2	**M2GP**	**112**	**MA**	3GGP 113 310-••A	940	80.9	82.0	0.77	5.23	5.5	22.35	2.0	2.3	0.03116	40	54
3	**M2GP**	**132**	**SA**	3GGP 133 110-••A	960	83.3	84.2	0.79	6.73	6.5	29.84	2.0	2.4	0.03116	55	56
4	**M2GP**	**132**	**MA**	3GGP 133 310-••A	960	84.7	84.9	0.78	8.93	6.5	39.79	2.0	2.9	0.04074	65	56
7.5	**M3GP**	**160**	**MLA**	3GGP 163 410-••G	965	89.0	89.7	0.81	15.5	6.5	74	1.9	3.0	0.088	160	57
11	**M3GP**	**160**	**MLB**	3GGP 163 420-••G	965	89.6	90.3	0.80	23	7.1	109	2.1	3.3	0.106	173	65
15	**M3GP**	**180**	**MLB**	3GGP 183 420-••G	972	91.4	91.6	0.81	31	7.0	147	1.9	3.3	0.221	233	58
18.5	**M3GP**	**200**	**MLA**	3GGP 203 410-••G	983	91.6	91.7	0.81	37	7.1	180	3.2	3.1	0.37	265	66
22	**M3GP**	**200**	**MLB**	3GGP 203 420-••G	983	91.9	91.9	0.81	43	7.5	214	3.2	3.2	0.43	285	61
30	**M3GP**	**225**	**SMB**	3GGP 223 220-••G	985	93.0	93.0	0.81	58	7.4	291	3.4	3.0	0.64	350	61
37	**M3GP**	**250**	**SMA**	3GGP 253 210-••G	987	93.6	93.6	0.81	71	7.2	358	3.2	2.9	1.16	420	66
45	**M3GP**	**280**	**SMA**	3GGP 283 210-••G	990	94.4	94.3	0.84	82	7.0	434	2.5	2.5	1.85	605	66
55	**M3GP**	**280**	**SMB**	3GGP 283 220-••G	990	94.6	94.6	0.84	101	7.0	531	2.7	2.6	2.2	645	66
75	**M3GP**	**315**	**SMA**	3GGP 313 210-••G	992	95.0	94.7	0.82	141	7.4	722	2.4	2.8	3.2	830	70
90	**M3GP**	**315**	**SMB**	3GGP 313 220-••G	992	95.5	95.3	0.84	163	7.5	866	2.4	2.8	4.1	930	70
110	**M3GP**	**315**	**SMC**	3GGP 313 230-••G	991	95.6	95.5	0.83	202	7.4	1060	2.5	2.9	4.9	1000	70
132	**M3GP**	**315**	**MLA**	3GGP 313 410-••G	991	95.8	95.7	0.83	240	7.5	1272	2.7	3.0	5.8	1150	68
160	**M3GP**	**355**	**SMA**	3GGP 353 210-••G	993	96.0	95.8	0.83	293	7.0	1539	2.0	2.6	7.9	1520	75
200	**M3GP**	**355**	**SMB**	3GGP 353 220-••G	993	96.2	96.1	0.84	357	7.2	1923	2.2	2.7	9.7	1680	75
250	**M3GP**	**355**	**SMC**	3GGP 353 230-••G	993	96.5	96.3	0.83	450	7.4	2404	2.6	2.9	11.3	1820	75
315	**M3GP**	**355**	**MLB**	3GGP 353 420-••G	992	96.4	96.3	0.83	570	7.0	3032	2.5	2.7	13.5	2180	75
355	**M3GP**	**355**	**LKA**	3GGP 353 810-••G	992	96.6	96.5	0.83	640	7.6	3417	2.7	2.9	15.5	2500	75
400	**M3GP**	**400**	**LKA**	3GGP 403 810-••G	993	96.7	96.6	0.82	730	7.1	3847	2.3	2.7	17	2900	76
400	**M3GP**	**400**	**LA**	3GGP 403 510-••G	993	96.7	96.6	0.82	730	7.1	3847	2.3	2.7	17	2900	76
450	**M3GP**	**400**	**LKB**	3GGP 403 820-••G	994	96.9	96.7	0.82	818	7.4	4323	2.4	2.8	20.5	3150	76
450	**M3GP**	**400**	**LB**	3GGP 403 520-••G	994	96.9	96.7	0.82	818	7.4	4323	2.4	2.8	20.5	3150	76
500	**M3GP**	**400**	**LC**	3GGP 403 530-••G	993	96.9	96.8	0.83	900	7.2	4808	2.5	2.7	22	3300	76
500	**M3GP**	**400**	**LKC**	3GGP 403 830-••G	993	96.9	96.8	0.83	900	7.2	4808	2.5	2.7	22	3300	76
560	**M3GP**	**400**	**LKD**	3GGP 403 840-••G	993	96.9	96.8	0.85	985	7.4	5385	2.4	3.0	24	3400	77
560	**M3GP**	**400**	**LD**	3GGP 403 540-••G	993	96.9	96.8	0.85	985	7.4	5385	2.4	3.0	24	3400	77
1000 r/min = 6-poles					**400 V 50 Hz**									**High-output design**		
14 [1)2)]	**M3GP**	**160**	**MLC**	3GGP 163 430-••G	969	89.3	89.3	0.75	31	7.9	138	2.8	3.9	0.121	188	64
18.5	**M3GP**	**180**	**MLC**	3GGP 183 430-••G	975	90.4	90.1	0.74	41	7.2	181	2.0	3.2	0.221	233	61
30	**M3GP**	**200**	**MLC**	3GGP 203 430-••G	983	91.9	91.8	0.81	60	7.5	292	3.5	3.4	0.49	305	65
37	**M3GP**	**225**	**SMC**	3GGP 223 230-••G	983	93.0	93.1	0.83	70	7.1	359	3.0	2.8	0.75	380	64
45	**M3GP**	**250**	**SMB**	3GGP 253 220-••G	986	93.9	93.9	0.82	85	7.2	436	3.3	2.8	1.49	465	65
75	**M3GP**	**280**	**SMC**	3GGP 283 230-••G	990	95.1	95.2	0.84	137	7.3	723	2.8	2.7	2.85	725	66

Notes:

When ordering motors, the following variant codes has to be added: acc. to needs 452 'DIP/Ex tD acc. to ATEX directive 94/9/EC, T= 125°C, category 3 D, IP 55'. 804 DIP/Ex tD, IEC 61241, T125°C, IP55 (zone 22)

The two bullets in the product code indicate choice of mounting arrangement (see ordering information), voltage and frequency (below).

Values above are given for 400 V 50 Hz; data for other voltages on request.

Dust ignition proof motors 71-400

Technical data for Category 3 D - T = 125°C - IP 55 - cast iron frame

ATEX Certified

IC 411; Insulation class F. temperature rise class B

Output kW 50 Hz	Motor type			Product code	Speed r/min	Efficiency at FL 100%	Efficiency at FL 75%	Power factor cos φ	Current I_N A	Current I_s/I_N	Torque T_N Nm	Torque T_s/T_N	Torque T_{max}/T_N	Moment of inertia J=1/4 GD² kgm²	Weight kg	Sound pressure level L_P dB(A)
750 r/min = 8-poles					**400 V 50 Hz**									**Basic design**		
0.18	**M2GP**	**80**	**MA**	3GGP 084 310-••A	685	53.2	52.3	0.61	0.85	2.5	2.46	1.8	1.9	0.00111	16	42
0.25	**M2GP**	**80**	**MB**	3GGP 084 320-••A	685	56.5	55.4	0.61	1.11	2.7	3.41	2.2	2.3	0.00326	17	42
0.37	**M2GP**	**90**	**SA**	3GGP 094 110-••A	703	64.2	63.8	0.61	1.48	3.3	5	2.2	2.9	0.00541	21	46
0.55	**M2GP**	**90**	**LA**	3GGP 094 510-••A	699	65.1	65.0	0.61	2.15	3.3	7.5	2.2	2.8	0.00756	24	46
0.75	**M2GP**	**100**	**LA**	3GGP 104 510-••A	700	71.4	71.4	0.65	2.35	3.3	10	1.6	2.1	0.00971	31	53
1.1	**M2GP**	**100**	**LB**	3GGP 104 520-••A	695	72.8	71.6	0.66	3.39	3.4	15.1	1.8	2.2	0.01186	34	53
1.5	**M2GP**	**112**	**MA**	3GGP 114 310-••A	701	76.1	76.5	0.69	4.71	3.0	20	1.8	2.2	0.01559	42	55
2.2	**M2GP**	**132**	**SA**	3GGP 134 110-••A	710	81.9	82.6	0.71	5.6	5.5	29.59	1.8	2.5	0.03625	56	55
3	**M2GP**	**132**	**MA**	3GGP 134 310-••A	710	81.9	82.2	0.76	7.51	4.9	40	2.5	2.8	0.04141	64	56
4	**M3GP**	**160**	**MLA**	3GGP 164 410-••G	717	83.7	83.8	0.71	10.1	5.2	53	1.8	2.8	0.071	146	59
5.5	**M3GP**	**160**	**MLB**	3GGP 164 420-••G	715	84.7	85.2	0.71	13.9	5.2	73	1.9	2.8	0.09	160	53
7.5	**M3GP**	**160**	**MLC**	3GGP 164 430-••G	718	86.9	87.6	0.70	18.4	5.7	100	2.1	3.1	0.121	188	55
11	**M3GP**	**180**	**MLB**	3GGP 184 420-••G	724	90.3	90.4	0.73	24.5	5.7	145	1.7	2.7	0.239	227	63
15	**M3GP**	**200**	**MLA**	3GGP 204 410-••G	734	90.7	90.8	0.79	31	7.0	195	2.4	3.2	0.45	280	56
18.5	**M3GP**	**225**	**SMA**	3GGP 224 210-••G	734	90.8	90.8	0.74	41	6.1	241	2.2	3.0	0.61	335	55
22	**M3GP**	**225**	**SMB**	3GGP 224 220-••G	732	91.0	91.3	0.77	46	6.5	287	2.2	2.9	0.68	350	56
30	**M3GP**	**250**	**SMA**	3GGP 254 210-••G	735	92.3	92.4	0.79	61	6.7	390	2.0	2.9	1.25	420	56
37	**M3GP**	**280**	**SMA**	3GGP 284 210-••G	741	93.4	93.3	0.78	74	7.3	477	1.7	3.0	1.85	605	65
45	**M3GP**	**280**	**SMB**	3GGP 284 220-••G	741	94.1	93.8	0.78	90	7.6	580	1.8	3.1	2.2	645	65
55	**M3GP**	**315**	**SMA**	3GGP 314 210-••G	742	94.1	94.0	0.81	104	7.1	708	1.6	2.7	3.2	830	62
75	**M3GP**	**315**	**SMB**	3GGP 314 220-••G	741	94.5	94.4	0.82	141	7.1	968	1.7	2.7	4.1	930	62
90	**M3GP**	**315**	**SMC**	3GGP 314 230-••G	741	94.8	94.7	0.82	167	7.4	1161	1.8	2.7	4.9	1000	64
110	**M3GP**	**315**	**MLA**	3GGP 314 410-••G	740	95.0	95.0	0.83	203	7.3	1420	1.8	2.7	5.8	1150	72
132	**M3GP**	**355**	**SMA**	3GGP 354 210-••G	744	95.7	95.6	0.80	250	7.5	1694	1.5	2.6	7.9	1520	69
160	**M3GP**	**355**	**SMB**	3GGP 354 220-••G	744	95.7	95.6	0.80	305	7.6	2054	1.6	2.6	9.7	1680	69
200	**M3GP**	**355**	**SMC**	3GGP 354 230-••G	743	95.7	95.6	0.80	378	7.4	2570	1.6	2.6	11.3	1820	69
250	**M3GP**	**355**	**MLB**	3GGP 354 420-••G	743	95.9	95.8	0.80	476	7.5	3213	1.6	2.7	13.5	2180	72
315	**M3GP**	**400**	**LA**	3GGP 404 510-••G	744	96.4	96.3	0.81	582	7.0	4043	1.2	2.6	17	2900	71
315	**M3GP**	**400**	**LKA**	3GGP 404 810-••G	744	96.4	96.3	0.81	582	7.0	4043	1.2	2.6	17	2900	71
355	**M3GP**	**400**	**LKB**	3GGP 404 820-••G	743	96.5	96.5	0.83	640	6.8	4563	1.2	2.5	21	3200	71
355	**M3GP**	**400**	**LB**	3GGP 404 520-••G	743	96.5	96.5	0.83	640	6.8	4563	1.2	2.5	21	3200	71
400	**M3GP**	**400**	**LC**	3GGP 404 530-••G	744	96.6	96.5	0.82	735	7.4	5134	1.3	2.7	24	3400	71
400	**M3GP**	**400**	**LKC**	3GGP 404 830-••G	744	96.6	96.5	0.82	735	7.4	5134	1.3	2.7	24	3400	71
750 r/min = 8-poles					**400 V 50 Hz**									**High-output design**		
18.5	**M3GP**	**200**	**MLB**	3GGP 204 420-••G	734	90.6	90.8	0.80	37.5	6.9	241	2.2	3.2	0.54	300	57
30 [1]	**M3GP**	**225**	**SMC**	3GGP 224 230-••G	731	90.6	91.0	0.77	63	6.3	392	2.3	3.0	0.75	375	59
37	**M3GP**	**250**	**SMB**	3GGP 254 220-••G	737	93.0	92.9	0.78	75	7.5	479	2.3	3.4	1.52	465	59
55	**M3GP**	**280**	**SMC**	3GGP 284 230-••G	741	94.4	94.3	0.80	105	7.9	709	1.9	3.1	2.85	725	65

[1] Temperature rise class F.
[2] Nominal power lower than CENELEC + 1

Notes:

When ordering motors, the following variant code has to be added:
452 'DIP/Ex tD acc. to ATEX directive 94/9/EC, T= 125°C, category 3 D, IP 55'.

Rating plates

For motor sizes 80 to 132 the rating plate gives one current value for the voltage area. That is the highest current that can occur within the voltage area with the given output. Aluminum motors in category 3D, frame sizes 90 to 100, are self-certified.

For cast iron motor sizes 160 to 400 the rating plate is in table form giving values for speed, current and power factor for six voltages.

European standards require a special marking on dust ignition proof motors. The marking shall include the following:
- type of protection
- apparatus category
- temperature class
- name and EC reference number of the notified body
- certificate number

Aluminum motors, sizes 71-80

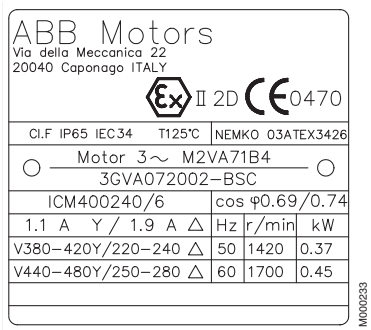

Aluminum motors, sizes 90-100

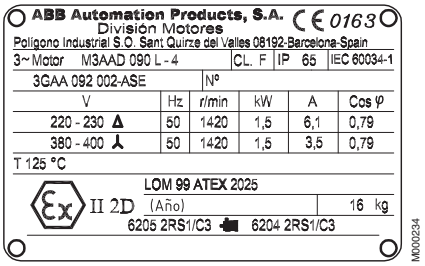

Aluminum motors, sizes 112-132

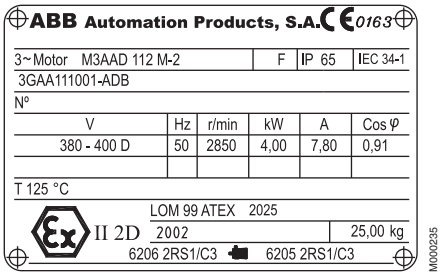

Aluminum motors, sizes 160-280

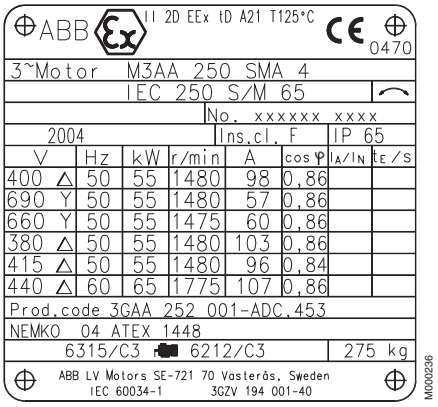

Cast iron motors, sizes 80-132

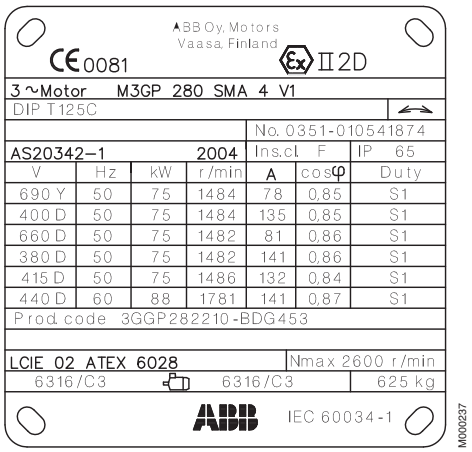

Cast iron motors, sizes 80-400

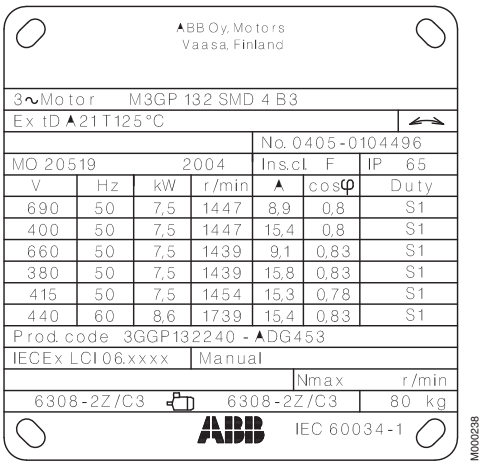

Dust ignition proof Ex tD (DIP) aluminum motors 2D - Variant codes

Code [1]/Variant		71	80	90	100	112	132	160	180	200	225	250	280
Balancing													
052	Vibration acc. to Grade A (IEC 60034-14).	P	P	S	S	S	S	S	S	S	S	S	S
417	Vibration acc. to Grade B (IEC 60034-14).	NA	NA	P	NA	P	P	R	R	R	R	R	R
423	Balanced without key	P	P	P	P	NA	NA	R	R	R	R	R	R
424	Full key balancing.	P	P	P	P	P	P	P	P	P	P	P	P
Bearings and Lubrication													
036	Transport lock for bearings.	NA	NA	M	M	M	M	M	M	M	M	M	M
037	Roller bearing at D-end.	NA	NA	M	M	P	P	NA	NA	NA	NA	NA	NA
039	Cold resistant grease.	M	M	M	M	M	M	NA	NA	NA	NA	NA	NA
040	Heat resistant grease.	M	M	M	M	M	P	S	S	S	S	S	S
041	Bearings regreasable via grease nipples.	N	N	M	M	P	P	NA	NA	NA	NA	NA	NA
042	Locked drive-end.	M	M	S	S	S	S	S	S	S	S	S	S
043	SPM nipples.	NA	NA	NA	NA	NA	NA	M	M	M	M	M	M
057	2RS bearings at both ends.	M	M	M	M	P	P	S	S	S	S	S	S
058	Angular contact bearing at D-end, shaft force away from bearing.	NA	NA	P	P	P	P	NA	NA	NA	NA	NA	NA
059	Angular contact bearing at N-end, shaft force towards bearing.	NA	NA	P	P	P	P	NA	NA	NA	NA	NA	NA
797	Stainless steel SPM Nipples	NA	NA	NA	NA	NA	NA	P	P	P	P	P	P
Branch standard designs													
079	Silumin-alloy rotor cage.	P	P	P	P	P	P	NA	NA	NA	NA	NA	NA
142	“Manilla connection”	NA	NA	P	P	P	P	P	P	P	P	P	P
178	Stainless steel / acid proof bolts.	M	M	M	M	M	M	M	M	M	M	M	M
209	Non-standard voltage or frequency, (special winding).	P	P	P	P	P	P	P	P	P	P	P	P
217	Cast iron D-end shield (on aluminum motor).	NA	NA	M	M	M	M	R	R	R	R	R	S
232	Cast iron N-end shield (on aluminum motor).	NA	NA	NA	NA	NA	NA	R	R	R	R	R	R
425	Corrosion protected stator and rotor core.	P	P	P	P	P	P	P	P	P	P	P	P
Cooling system													
068	Metal fan.	M	M	M	M	M	M	M	M	M	M	M	M
075	Cooling method IC418 (without fan).	P	P	P	P	P	P	NA	NA	NA	NA	NA	NA
183	Separate motor cooling (fan axial, N-end).	M	M	M	M	M	P	NA	NA	NA	NA	NA	NA
189	Separate motor cooling, IP44, 400V, 50Hz (fan axial, N-end).	NA	NA	NA	NA	NA	NA	M	M	M	M	M	M
Documentation													
141	Binding dimension drawing.	M	M	M	M	M	M	M	M	M	M	M	M
Drain holes													
065	Plugged existing drain holes.	M	M	M	M	M	M	S	S	S	S	S	S
Earthing Bolt													
067	External earthing bolt.	M	M	M	M	M	M	S	S	S	S	S	S
Hazardous Environments													
452	DIP/Ex tD acc. to ATEX directive 94/9/EC, T= 125 °C, cat. 3D, IP55	M	M	M	M	M	M	NA	NA	NA	NA	NA	NA
453	DIP/Ex tD acc. to ATEX directive 94/9/EC, T= 125 °C, cat. 2D, IP65	M	M	P	P	P	P	M	M	M	M	M	M

[1] Certain variant codes cannot be used simultaneously.

S = Included as standard.
M = On modification of a stocked motor, or on new manufacture, the number per order may be limited.

P = New manufacture only.
R = On request.
NA = Not applicable.

7

Code [1]/Variant		71	80	90	100	112	132	160	180	200	225	250	280
Heating elements													
450	Heating element, 100-120V.	M	M	M	M	M	M	M	M	M	M	M	M
451	Heating element, 200-240V.	M	M	M	M	M	M	M	M	M	M	M	M
Insulation system													
014	Winding insulation class H.	P	P	P	P	P	P	NA	NA	NA	NA	NA	NA
405	Special winding insulation for frequency converter supply.	NA	NA	P	P	P	P	P	P	P	P	P	P
Mounting arrangements													
007	IM 3001 flange mounted, IEC flange, from IM 1001 (B5 from B3).	M	M	M	M	M	NA	NA	NA	NA	NA	NA	NA
008	IM 2101 foot/flange mounted, IEC flange, from IM 1001 (B34 from B3).	M	M	M	M	M	M	M	NA	NA	NA	NA	NA
009	IM 2001 foot/flange mounted, IEC flange, from IM 1001 (B35 from B3).	M	M	M	M	M	M	M	M	M	M	M	M
047	IM 3601 flange mounted, IEC flange, from IM 3001 (B14 from B5).	M	M	M	M	M	M	M	NA	NA	NA	NA	NA
048	IM 3001 flange mounted, IEC flange, from IM 3601 (B5 from B14).	M	M	M	M	M	M	NA	NA	NA	NA	NA	NA
066	Modified for non-standard mounting position (please specify IM xxxx), (must be ordered for all mounting arrangements exluding IM B3 (1001) and IM B5 (3001).	M	M	M	M	M	M	NA	NA	NA	NA	NA	NA
078	(IM 3601) Flange mounted, DIN C-flange.	P	P	NA	NA	NA	NA	NA	NA	NA	NA	NA	NA
080	(IM 3001) Flange mounted, DIN A-flange.	P	NA	NA	M	NA	NA	NA	NA	NA	NA	NA	NA
090	(IM 2101) foot/flange mounted, DIN C-flange, from IM 1001 (B34 from B3).	P	P	NA	NA	NA	NA	NA	NA	NA	NA	NA	NA
091	(IM 2001) foot/flange mounted, DIN A-flange, from IM 1001 (B35 from B3).	P	NA	M	M	NA	NA	NA	NA	NA	NA	NA	NA
093	IM 3601 flange mounted, IEC flange, from IM 1001 (B14 from B3).	M	M	M	M	M	NA	NA	NA	NA	NA	NA	NA
200	Flange ring holder.	M	M	M	M	M	M	NA	NA	NA	NA	NA	NA
216	Flange ring FF 85.	M	M	NA	NA	NA	NA	NA	NA	NA	NA	NA	NA
218	Flange ring FT 85.	M	M	M	NA	NA	NA	NA	NA	NA	NA	NA	NA
219	Flange ring FT 100.	M	M	M	NA	NA	NA	NA	NA	NA	NA	NA	NA
220	Flange ring FF 100.	M	M	M	NA	NA	NA	NA	NA	NA	NA	NA	NA
223	Flange ring FF 115.	M	M	M	NA	NA	NA	NA	NA	NA	NA	NA	NA
224	Flange ring FT 115.	M	M	M	NA	NA	NA	NA	NA	NA	NA	NA	NA
226	Flange ring FF 130.	M	M	M	M	M	NA	NA	NA	NA	NA	NA	NA
227	Flange ring FT 130.	M	M	M	M	M	NA	NA	NA	NA	NA	NA	NA
229	Flange FT 130.	NA	NA	M	M	M	NA	NA	NA	NA	NA	NA	NA
233	Flange ring FF 165.	M	M	M	M	M	NA	NA	NA	NA	NA	NA	NA
234	Flange ring FT 165.	M	M	M	M	M	NA	NA	NA	NA	NA	NA	NA
235	Flange FF 165.	NA	NA	M	M	M	NA	NA	NA	NA	NA	NA	NA
236	Flange FT 165.	NA	NA	NA	NA	NA	M	NA	NA	NA	NA	NA	NA
243	Flange ring FF 215.	NA	NA	P	M	M	M	NA	NA	NA	NA	NA	NA
244	Flange ring FT 215.	NA	NA	NA	M	M	M	NA	NA	NA	NA	NA	NA
245	Flange FF 215.	NA	NA	NA	M	M	NA	NA	NA	NA	NA	NA	NA
253	Flange ring FF 265.	NA	NA	NA	NA	NA	M	NA	NA	NA	NA	NA	NA
254	Flange ring FT 265.	NA	NA	NA	NA	NA	M	NA	NA	NA	NA	NA	NA
255	Flange FF 265.	NA	NA	NA	NA	NA	M	NA	NA	NA	NA	NA	NA
260	Flange FT 115.	NA	NA	M	M	NA	NA	NA	NA	NA	NA	NA	NA
306	IM 1001 foot mounted, from IM 3601 (B3 from B14).	M	M	M	M	M	NA	NA	NA	NA	NA	NA	NA

[1] Certain variant codes cannot be used simultaneously.

S = Included as standard.
M = On modification of a stocked motor, or on new manufacture, the number per order may be limited.
P = New manufacture only.
R = On request.
NA = Not applicable.

7

Code [1]/Variant		71	80	90	100	112	132	160	180	200	225	250	280
307	IM 2101 foot/flange mounted, IEC flange, from IM 3601 (B34 from B14).	M	M	M	M	M	NA	NA	NA	NA	NA	NA	NA
308	IM 2001 foot/flange mounted, IEC flange, from IM 3601 (B35 from B14).	M	M	M	M	M	NA	NA	NA	NA	NA	NA	NA
309	IM 1001 foot mounted, from IM 3001 (B3 from B5).	M	M	M	M	M	NA	NA	NA	NA	NA	NA	NA
310	IM 2101 foot/flange mounted, IEC flange, from IM 3001 (B34 from B5).	M	M	M	M	M	NA	NA	NA	NA	NA	NA	NA
311	IM 2001 foot/flange mounted, IEC flange, from IM 3001 (B35 from B5).	M	M	M	M	M	NA	NA	NA	NA	NA	NA	NA
312	IM 1001 foot mounted, from IM 2101 (B3 from B34).	M	M	M	M	M	NA	NA	NA	NA	NA	NA	NA
313	IM 3601 flange mounted, IEC flange, from IM 2101 (B14 from B34).	M	M	M	M	M	NA	NA	NA	NA	NA	NA	NA
314	IM 3001 flange mounted, IEC flange, from IM 2101 (B5 from B34).	M	M	M	M	M	NA	NA	NA	NA	NA	NA	NA
315	IM 2001 foot/flange mounted, IEC flange, from IM 2101 (B35 from B34).	M	M	M	M	M	NA	NA	NA	NA	NA	NA	NA
316	IM 1001 foot mounted, from IM 2001 (B3 from B35).	M	M	M	M	M	M	NA	NA	NA	NA	NA	NA
317	IM 3601 flange mounted, IEC flange, from IM 2001 (B14 from B35).	M	M	M	M	M	NA	NA	NA	NA	NA	NA	NA
318	IM 3001 flange mounted, IEC flange, from IM 2001 (B5 from B35).	M	M	M	M	M	NA	NA	NA	NA	NA	NA	NA
319	IM 2101 foot/flange mounted, IEC flange, from IM 2001 (B34 from B35).	M	M	M	M	M	NA	NA	NA	NA	NA	NA	NA
Painting													
114	Special paint colour, standard grade.	M	M	M	M	M	M	M	M	M	M	M	M
179	Special paint specification.	NA	NA	P	P	P	P	R	R	R	R	R	R
Protection													
005	Metal protective roof, vertical motor, shaft down.	M	M	M	M	M	M	M	M	M	M	M	M
072	Radial seal at D-end.	M	M	M	M	M	M	NA	NA	NA	NA	NA	NA
073	Sealed against oil at D-end.	M	M	NA	NA	NA	NA	NA	NA	NA	NA	NA	NA
076	Draining holes with plugs. Felt plugs.	S	S	NA	NA	NA	NA	NA	NA	NA	NA	NA	NA
158	Degree of protection IP65.	M	M	M	M	M	P	S	S	S	S	S	S
211	Weather protected, IP xx W	NA	NA	P	P	P	P	NA	NA	NA	NA	NA	NA
403	Degree of protection IP56.	M	M	M	M	P	P	NA	NA	NA	NA	NA	NA
404	Degree of protection IP56, without fan and fan cover	P	P	P	P	P	P	NA	NA	NA	NA	NA	NA
784	Gamma-seal at D-end.	NA	NA	M	M	NA	NA	S	S	S	S	S	S
Rating & instruction plates													
002	Restamping voltage, frequency and output, continuous duty.	M	M	M	M	M	M	M	M	M	M	M	M
003	Individual serial number.	P	P	M	M	M	M	S	S	S	S	S	S
004	Additional text on std rating plate (max 12 digits on free text line)	NA	NA	NA	NA	M	M	NA	NA	NA	NA	NA	NA
095	Restamping output (maintained voltage, frequency), intermittent duty.	M	M	M	M	M	M	R	R	R	R	R	R
098	Stainless rating plate.	M	M	M	M	M	M	NA	NA	NA	NA	NA	NA
135	Mounting of additional identification plate, stainless.	M	M	M	M	M	M	NA	NA	NA	NA	NA	NA
138	Mounting of additional identification plate, aluminum.	M	M	M	M	M	M	M	M	M	M	M	M
139	Additional identification plate delivered loose.	M	M	M	M	M	M	M	M	M	M	M	M
160	Additional rating plate affixed.	M	M	M	M	M	M	M	M	M	M	M	M
161	Additional rating plate delivered loose.	M	M	M	M	M	M	M	M	M	M	M	M
162	Rating plate fixed to stator.	NA	NA	M	M	M	M	S	S	S	S	S	S

[1] Certain variant codes cannot be used simultaneously.

S = Included as standard.
M = On modification of a stocked motor, or on new manufacture, the number per order may be limited.
P = New manufacture only.
R = On request.
NA = Not applicable.

7

Code [1]/Variant		71	80	90	100	112	132	160	180	200	225	250	280
163	Frequency converter rating plate. Rating data according to quotation.	NA	NA	NA	NA	NA	NA	M	M	M	M	M	M
198	Aluminum rating plate.	S	S	M	M	M	M	S	S	S	S	S	S
Shaft & rotor													
069	Two shaft extensions as per basic catalogue.	P	P	P	P	P	P	R	R	R	R	R	R
070	One or two special shaft extensions, standard shaft material.	P	P	P	P	P	P	R	R	R	R	R	R
131	Motor delivered with half key (Key not exceeding shaft diameter)	NA	NA	NA	NA	NA	NA	M	M	M	M	M	M
165	Shaft extension with open key-way.	P	P	P	P	P	P	NA	NA	NA	NA	NA	NA
410	Stainless steel shaft (standard or non-standard design).	P	P	P	P	P	P	NA	NA	NA	NA	NA	NA
Stator winding temperature sensors													
121	Bimetal detectors, break type (NCC), (3 in series), 130°C, in stator winding.	M	M	M	M	M	M	M	M	M	M	M	M
122	Bimetal detectors, break type (NCC), (3 in series), 150°C, in stator winding.	M	M	M	M	M	M	M	M	M	M	M	M
123	Bimetal detectors, break type (NCC), (3 in series), 170°C, in stator winding.	M	M	M	M	P	P	NA	NA	NA	NA	NA	NA
124	Bimetal detectors, break type (NCC), (3 in series), 140°C, in stator winding.	NA	NA	NA	NA	NA	NA	M	M	M	M	M	M
125	Bimetal detectors, break type (NCC), (2x3 in series), 150°C, in stator winding.	M	M	M	M	P	P	M	M	M	M	M	M
127	Bimetal detectors, break type (NCC), (3 in series, 130°C & 3 in series, 150°C), in stator winding.	M	M	M	M	P	P	M	M	M	M	M	M
321	Bimetal detectors, closing type (NO), (3 in parallel), 130°C, in stator winding.	M	M	M	M	M	M	NA	NA	NA	NA	NA	NA
322	Bimetal detectors, closing type (NO), (3 in parallel), 150°C, in stator winding.	M	M	M	M	M	M	NA	NA	NA	NA	NA	NA
323	Bimetal detectors, closing type (NO), (3 in parallel), 170°C, in stator winding.	NA	NA	P	P	P	P	NA	NA	NA	NA	NA	NA
325	Bimetal detectors, closing type (NO), (2x3 in parallel), 150°C, in stator winding.	NA	NA	P	P	P	P	NA	NA	NA	NA	NA	NA
327	Bimetal detectors, closing type (NO), (3 in parallel, 130°C & 3 in parallel, 150°C), in stator winding.	NA	NA	P	P	P	P	NA	NA	NA	NA	NA	NA
435	PTC - thermistors (3 in series), 130°C, in stator winding.	M	M	M	M	M	M	M	M	M	M	M	M
436	PTC - thermistors (3 in series), 150°C, in stator winding.	M	M	M	M	M	M	M	M	S	S	S	S
437	PTC - thermistors (3 in series), 170°C, in stator winding.	M	M	M	M	M	M	NA	NA	NA	NA	NA	NA
439	PTC - thermistors (2x3 in series), 150°C, in stator winding.	M	M	M	M	M	P	M	M	M	M	M	M
440	PTC - thermistors (3 in series, 110°C & 3 in series, 130°C), in stator winding.	M	M	NA	NA	NA	NA	NA	NA	NA	NA	NA	NA
441	PTC - thermistors (3 in series, 130°C & 3 in series, 150°C), in stator winding.	M	M	M	M	P	M	M	M	M	M	M	M
442	PTC - thermistors (3 in series, 150°C & 3 in series, 170°C), in stator winding.	M	M	NA	NA	NA	NA	M	M	M	M	M	M
445	Pt-100 2-wire in stator winding, 1 per phase	NA	NA	NA	NA	NA	NA	M	M	M	M	M	M
446	Pt-100 2-wire in stator winding, 2 per phase	NA	NA	NA	NA	NA	NA	M	M	M	M	M	M
Terminal box													
015	Motor supplied in D connection.	M	M	M	M	NA	NA	M	M	M	M	M	M
016	9 terminals in terminal box	NA	NA	P	P	P	P	NA	NA	NA	NA	NA	NA
017	Motor supplied in Y connection.	M	M	M	M	NA	NA	M	M	M	M	M	M
018	D connection in terminal box (reconnection from Y), single phase Steinmetz.	NA	NA	M	M	NA	NA	NA	NA	NA	NA	NA	NA

[1] Certain variant codes cannot be used simultaneously.

S = Included as standard.
M = On modification of a stocked motor, or on new manufacture, the number per order may be limited.
P = New manufacture only.
R = On request.
NA = Not applicable.

7

Code [1]/Variant		71	80	90	100	112	132	160	180	200	225	250	280
019	Larger than standard terminal box	NA	NA	NA	NA	NA	NA	R	R	R	R	R	NA
021	Terminal box LHS (seen from D-end).	M	M	P	P	NA	NA	-	-	P	P	P	P
022	Cable entry LHS (seen from D-end).	S	S	NA	NA	NA	NA	P	P	P	P	P	P
136	Extended cable connection, standard terminal box.	M	M	M	M	NA	NA	R	R	R	R	R	R
137	Extended cable connection, low terminal box, “Flying leads”.	M	M	P	P	P	P	NA	NA	NA	NA	NA	NA
157	Terminal box degree of protection IP65.	P	P	NA	NA	NA	NA	S	S	S	S	S	S
180	Terminal box RHS (seen from D-end).	M	M	P	P	P	NA	-	-	P	P	P	P
187	Cable glands of non-standard design.	NA	NA	NA	NA	NA	NA	R	R	R	R	R	R
230	Standard metal cable glands.	M	M	M	M	M	M	M	M	M	M	M	M
375	Standard plastic cable gland	M	M	M	M	M	M	NA	NA	NA	NA	NA	NA
376	Two standard plastic cable glands	M	M	M	M	M	M	NA	NA	NA	NA	NA	NA
418	Separate terminal box for auxiliaries, std. material	NA	NA	NA	NA	NA	NA	M	M	M	M	M	M
731	Two standard metal cable glands.	M	M	M	M	M	M	M	M	M	M	M	M
732	Standard cable gland, EEx d IIB, armoured cable.	M	M	NA	NA	NA	NA	NA	NA	NA	NA	NA	NA
738	Prepared for metric cable glands.	NA	NA	NA	NA	NA	NA	S	S	S	S	S	S
Testing													
140	Test confirmation	M	M	NA	NA	NA	NA	M	M	M	M	M	M
145	Type test report from a catalogue motor, 400V 50Hz.	M	M	M	M	M	M	M	M	M	M	M	M
146	Type test with report for motor from specific delivery batch.	M	M	M	M	M	M	M	M	M	M	M	M
147	Type test with report for motor from specific delivery batch, customer witnessed.	M	M	M	M	M	M	M	M	M	M	M	M
148	Routine test report.	M	M	M	M	M	M	M	M	M	M	M	M
149	Test according to separate test specification.	M	M	M	M	M	M	R	R	R	R	R	R
153	Reduced test for classification society.	M	M	M	M	M	M	M	M	M	M	M	M
221	Type test and multi-point load test with report for motor from specific delivery batch.	M	M	M	M	M	M	M	M	M	M	M	M
222	Torque/speed curve, type test and multi-point load test with report for motor from specific delivery batch.	M	M	M	M	M	M	M	M	M	M	M	M
760	Vibration level test	P	P	M	M	M	M	M	M	M	M	M	M
761	Vibration spectrum test.	NA	NA	NA	NA	NA	NA	R	R	R	R	R	R
762	Noise level test.	P	P	M	M	M	M	M	M	M	M	M	M
763	Noise spectrum test.	NA	NA	NA	NA	NA	NA	R	R	R	R	R	R
764	Complete test with ABB frequency converter.	NA	NA	NA	NA	NA	NA	R	R	R	R	R	R
Variable speed drives													
181	Rating plate with ABB standard loadability values for VSD operation. Other auxiliaries for VSD operation to be selected as necessary.	S	S	NA	NA	NA	NA	NA	NA	NA	NA	NA	NA
182	Pulse sensor mounted as specified.	NA	NA	NA	NA	NA	NA	R	R	R	R	R	R
470	Prepared for hollow shaft pulse tacho (L&L equivalent).	NA	NA	NA	NA	NA	NA	M	M	M	M	M	M
472	1024 pulse tacho (L&L 861).	NA	NA	NA	NA	NA	NA	R	R	R	R	R	R
473	2048 pulse tacho (L&L 861).	NA	NA	NA	NA	NA	NA	R	R	R	R	R	R
570	Prepared for hollow shaft pulse tacho (L&L 503).	NA	NA	NA	NA	NA	NA	M	M	M	M	M	M
701	Insulated bearing at N-end.	NA	NA	NA	NA	NA	NA	NA	NA	M	M	M	M
704	EMC cable gland.	NA	NA	P	P	P	P	M	M	M	M	M	M
Y/D starting													
118	Terminals for Y/D start at high speed (two speed windings).	NA	NA	P	P	P	P	NA	NA	NA	NA	NA	NA

[1] Certain variant codes cannot be used simultaneously.

S = Included as standard.
M = On modification of a stocked motor, or on new manufacture, the number per order may be limited.

P = New manufacture only.
R = On request.
NA = Not applicable.

7

Dust ignition proof Ex tD (DIP) 2D cast iron motors - Variant codes

Code [1] / Variant		80	90	100	112	132	160	180	200	225	250	280	315	355	400
Balancing															
052	Vibration acc. to Grade A (IEC 60034-14).	S	S	S	S	S	S	S	S	S	S	S	S	S	S
417	Vibration acc. to Grade B (IEC 60034-14).	M	M	M	M	M	P	P	P	P	P	P	P	P	P
424	Full key balancing.	M	M	M	M	M	P	P	P	P	P	P	P	P	P
Bearings and Lubrication															
036	Transport lock for bearings.	NA	NA	NA	NA	NA	M	M	M	M	M	P	P	P	P
037	Roller bearing at D-end.	NA	NA	NA	NA	NA	M	M	M	M	M	M	M	NA	NA
040	Heat resistant grease.	NA	NA	NA	NA	NA	S	S	S	S	S	S	S	S	S
041	Bearings regreasable via grease nipples.	NA	NA	NA	NA	NA	S	S	S	S	S	S	S	S	S
043	SPM nipples.	NA	NA	NA	NA	NA	S	S	S	S	S	S	S	S	S
058	Angular contact bearing at D-end, shaft force away from bearing.	NA	NA	NA	NA	NA	P	P	P	P	P	P	P	P	P
107	Pt100 2-wire in bearings.	NA	NA	NA	NA	NA	P	P	P	P	P	P	P	P	P
130	Pt100 3-wire in bearings.	NA	NA	NA	NA	NA	P	P	P	P	P	P	P	P	P
194	2Z bearings greased for life at both ends.	S	S	S	S	S	M	M	M	M	M	NA	NA	NA	NA
433	Outlet grease collector.	NA	NA	NA	NA	NA	NA	NA	NA	NA	NA	P	P	P	P
796	Grease nipples JIS B 1575 PT 1/8 Type A.	NA	NA	NA	NA	NA	P	P	P	P	P	P	P	P	P
797	Stainless steel SPM nipples.	NA	NA	NA	NA	NA	M	M	M	M	M	M	M	P	P
798	Stainless steel grease nipples.	NA	NA	NA	NA	NA	M	M	M	M	M	M	M	P	P
Brakes															
412	Built-on brake.	NA	NA	NA	NA	NA	R	R	R	R	R	R	R	R	R
Branch standard designs															
142	“Manilla connection”	NA	NA	NA	NA	NA	R	R	R	R	R	R	R	R	R
178	Stainless steel / acid proof bolts.	M	M	M	M	M	M	M	M	M	M	M	M	P	P
204	Jacking bolts for foot mounted motors.	NA	NA	NA	NA	NA	P	P	P	P	P	P	P	S	S
209	Non-standard voltage or frequency, (special winding).	P	P	P	P	P	P	P	P	P	P	P	P	P	P
396	Motor designed for ambient temperature -20°C to -40°C, wtih space heaters (code 450/451 must be added).	R	R	R	R	R	P	P	P	P	P	P	P	P	P
397	Motor designed for ambient temperature -40°C to -55°C, wtih space heaters (code 450/451 must be added).	R	R	R	R	R	P	P	P	P	P	P	P	P	P
398	Motor designed for ambient temperature -20°C to -40°C.	R	R	R	R	R	P	P	P	P	P	P	P	P	P
399	Motor designed for ambient temperature -40°C to -55°C.	R	R	R	R	R	P	P	P	P	P	P	P	P	P
786	Special design shaft upwards (V3, V36, V6) for outdoor mounting.	R	R	R	R	R	P	P	P	P	P	NA	NA	NA	NA
Cooling system															
044	Unidirectional fan for reduced noice level. Rotation clockwise seen from D-end. Available only for 2-pole motors.	NA	NA	NA	NA	NA	NA	NA	NA	NA	NA	P	P	P	S
045	Unidirectional fan for reduced noice level. Rotation counter clockwise seen from D-end. Available only for 2-pole motors.	NA	NA	NA	NA	NA	NA	NA	NA	NA	NA	P	P	P	S
068	Metal fan.	M	M	M	M	M	M	M	M	M	M	M	M	P	P
075	Cooling method IC418 (without fan).	R	R	R	R	R	R	R	R	R	R	R	R	R	NA
183	Separate motor cooling (fan axial, N-end).	NA	NA	NA	NA	NA	P	P	P	P	P	P	P	P	P
422	Separate motor cooling (fan top or side, N-end).	NA	NA	NA	NA	NA	NA	NA	NA	NA	NA	P	P	P	P
791	Stainless steel fan cover.	NA	NA	NA	NA	NA	NA	NA	NA	P	P	P	P	P	P

[1] Certain variant codes cannot be used simultaneously.

S = Included as standard.
M = On modification of a stocked motor, or on new manufacture, the number per order may be limited.
P = New manufacture only.
R = On request.
NA = Not applicable.

Code [1] / Variant		80	90	100	112	132	160	180	200	225	250	280	315	355	400
Coupling															
035	Assembly of customer supplied coupling-half.	R	R	R	R	R	P	P	P	P	P	P	P	P	P
Documentation															
141	Binding dimension drawing.	M	M	M	M	M	M	M	M	M	M	M	M	M	M
Drain holes															
065	Plugged existing drain holes.	M	M	M	M	M	M	M	M	M	M	M	M	P	P
Earthing Bolt															
067	External earthing bolt.	S	S	S	S	S	S	S	S	S	S	S	S	S	S
Hazardous Environments															
452	DIP/Ex tD acc. to ATEX directive 94/9/EC , T= 125 °C, cat. 3D, IP55.	M	M	M	M	M	M	M	M	M	M	M	M	P	P
453	DIP/Ex tD acc. to ATEX directive 94/9/EC , T= 125 °C, cat. 2D, IP65.	M	M	M	M	M	M	M	M	M	M	M	M	P	P
454	DIP/Ex tD acc. to ATEX directive 94/9/EC , T= 125 °C, cat. 3D, IP65.	M	M	M	M	M	M	M	M	M	M	M	M	P	NA
804	DIP/Ex tD, IEC 61241, T125 °C, IP55 (zone 22).	M	M	M	M	M	M	M	M	M	M	M	M	P	P
805	DIP/Ex tD, IEC 61241, T125 °C, IP65 (zone 21).	M	M	M	M	M	M	M	M	M	M	M	M	P	P
806	DIP/Ex tD, IEC 61241, T125 °C, IP65 (zone 22).	M	M	M	M	M	M	M	M	M	M	M	M	P	P
814	Ex tD (DIP) motors, temperature class T 150C	M	M	M	M	M	M	M	M	M	M	M	M	P	P
Heating elements															
450	Heating element, 100-120V.	M	M	M	M	M	M	M	M	M	M	M	M	P	P
451	Heating element, 200-240V.	M	M	M	M	M	M	M	M	M	M	M	M	P	P
Insulation system															
014	Winding insulation class H.	NA	NA	NA	NA	NA	P	P	P	P	P	P	P	P	P
405	Special winding insulation for frequency converter supply.	NA	NA	NA	NA	NA	P	P	P	P	P	P	P	P	P
406	Winding for supply >690<=1000 Volts.	NA	NA	NA	NA	NA	NA	NA	NA	NA	NA	P	P	P	P
Mounting arrangements															
008	IM 2101 foot/flange mounted, IEC flange, from IM 1001 (B34 from B3).	M	M	M	M	NA	NA	NA	NA	NA	NA	NA	NA	NA	NA
009	IM 2001 foot/flange mounted, IEC flange, from IM 1001 (B35 from B3).	M	M	M	M	M	M	M	M	M	M	M	M	P	P
047	IM 3601 flange mounted, IEC flange, from IM 3001 (B14 from B5).	M	M	M	M	M	NA	NA	NA	NA	NA	NA	NA	NA	NA
048	IM 3001 flange mounted, IEC flange, from IM 3601 (B5 from B14).	NA	NA	NA	NA	NA	NA	NA	NA	NA	NA	NA	NA	NA	NA
066	Modified for non-standard mounting position (please specify IM xxxx), (must be ordered for all mounting arrangements exluding IM B3 (1001) and IM B5 (3001).	M	M	M	M	M	M	M	M	M	M	M	M	M	P
305	Additional lifting lugs.	NA	NA	NA	NA	NA	NA	NA	NA	NA	NA	P	P	P	P
Painting															
106	Paint thickness = 80 µm.	NA	NA	NA	NA	NA	S	S	S	S	S	S	S	S	S
109	Paint thickness = 120 µm.	NA	NA	NA	NA	NA	M	M	M	M	M	M	M	P	P
110	Paint thickness = 160 µm.	NA	NA	NA	NA	NA	M	M	M	M	M	M	M	P	P
111	Offshore two-pack polyamide cured epoxy paint 160 µm.	P	P	P	P	P	M	M	M	M	M	P	P	P	P
114	Special paint colour, standard grade.	M	M	M	M	M	M	M	M	M	M	M	M	P	P
115	Offshore zink primer painting.	P	P	P	P	P	P	P	P	P	P	P	P	P	P
179	Special paint specification.	R	R	R	R	R	R	R	R	R	R	R	R	R	R

[1] Certain variant codes cannot be used simultaneously.

S = Included as standard.
M = On modification of a stocked motor, or on new manufacture, the number per order may be limited.

P = New manufacture only.
R = On request.
NA = Not applicable.

7

Code [1] / Variant		80	90	100	112	132	160	180	200	225	250	280	315	355	400
Protection															
005	Metal protective roof, vertical motor, shaft down.	M	M	M	M	M	M	M	M	M	M	M	M	P	P
072	Radial seal at D-end.	P	P	P	P	P	M	M	M	M	M	P	P	P	P
073	Sealed against oil at D-end.	NA	NA	NA	NA	NA	P	P	P	P	P	P	P	P	P
076	Draining holes with plugs. Felt plugs.	M	M	M	M	M	NA	NA	NA	NA	NA	NA	NA	NA	NA
158	Degree of protection IP65.	M	M	M	M	M	M	M	M	M	M	M	M	P	P
211	Weather protected, IP xx W	R	R	R	R	R	R	R	R	R	R	R	R	R	R
403	Degree of protection IP56.	M	M	M	M	M	M	M	M	M	M	M	M	P	P
404	Degree of protection IP56, without fan and fan cover.	NA	NA	NA	NA	NA	P	P	P	P	P	P	P	NA	NA
434	Degree of protection IP56, open deck.	R	R	R	R	R	P	P	P	P	P	P	P	P	P
783	Labyrinth sealing at D-end.	NA	NA	NA	NA	NA	P	P	P	P	P	P	P	S	S
Rating & instruction plates															
002	Restamping voltage, frequency and output, continuous duty.	M	M	M	M	M	M	M	M	M	M	M	M	P	P
095	Restamping output (maintained voltage, frequency), intermittent duty.	R	R	R	R	R	M	M	M	M	M	P	P	P	P
098	Stainless rating plate.	S	S	S	S	S	S	S	S	S	S	S	S	S	S
135	Mounting of additional identification plate, stainless.	M	M	M	M	M	M	M	M	M	M	M	M	P	P
139	Additional identification plate delivered loose.	M	M	M	M	M	M	M	M	M	M	M	M	P	P
161	Additional rating plate delivered loose.	M	M	M	M	M	M	M	M	M	M	M	M	P	P
163	Frequency converter rating plate. Rating data according to quotation.	M	M	M	M	M	M	M	M	M	M	M	M	P	P
Shaft & rotor															
069	Two shaft extensions as per basic catalogue.	NA	NA	NA	NA	NA	P	P	P	P	P	P	P	P	P
070	One or two special shaft extensions, standard shaft material.	NA	NA	NA	NA	NA	P	P	P	P	P	P	P	P	P
164	Shaft extension with closed key-way.	R	R	R	R	R	S	S	S	S	S	R	R	R	R
165	Shaft extension with open key-way.	S	S	S	S	S	R	R	R	R	R	S	S	S	S
410	Stainless steel shaft (standard or non-standard design).	NA	NA	NA	NA	NA	R	R	R	R	R	P	P	P	P
Standards and Regulations															
421	VIK design (Verband der Industriellen Energie- und Kraftwirtschaft e.V.).	M	M	M	M	M	P	P	P	P	P	P	P	P	P
773	EEMUA No 132 1988 design.	NA	NA	NA	NA	NA	P	P	P	R	R	R	R	R	R
775	Design according to SHELL DEP 33.66.05.31-Gen. January 1999 design.	M	M	M	M	M	M	M	M	M	M	M	M	P	P
778	GOST Export/Import Certificate (Russia).	M	M	M	M	M	M	M	M	M	M	M	M	P	P
779	SASO Export/Import Certificate (Saudi Arabia).	NA	NA	NA	NA	NA	M	M	M	M	M	M	M	P	P
Stator winding temperature sensors															
120	KTY 84-130 (1 per phase) in stator winding.	NA	NA	NA	NA	NA	P	P	P	P	P	P	P	P	P
435	PTC - thermistors (3 in series), 130°C, in stator winding.	M	M	M	M	M	M	M	M	M	M	M	M	P	P
436	PTC - thermistors (3 in series), 150°C, in stator winding.	S	S	S	S	S	S	S	S	S	S	S	S	S	S
438	PTC -thermistors (3 in series), 190°C, in stator winding.	NA	NA	NA	NA	NA	P	P	P	P	P	P	P	P	P
439	PTC - thermistors (2x3 in series), 150°C, in stator winding.	P	P	P	P	P	M	M	M	M	M	M	M	P	P
441	PTC - thermistors (3 in series, 130°C & 3 in series, 150°C), in stator winding.	P	P	P	P	P	M	M	M	M	M	M	M	P	P
445	Pt-100 2-wire in stator winding, 1 per phase.	NA	NA	NA	NA	NA	P	P	P	P	P	P	P	P	P
446	Pt-100 2-wire in stator winding, 2 per phase.	NA	NA	NA	NA	NA	P	P	P	P	P	P	P	P	P
502	Pt-100 3-wire in stator winding, 1 per phase.	NA	NA	NA	NA	NA	P	P	P	P	P	P	P	P	P
503	Pt-100 3-wire in stator winding, 2 per phase.	NA	NA	NA	NA	NA	P	P	P	P	P	P	P	P	P

[1] Certain variant codes cannot be used simultaneously.

S = Included as standard.
M = On modification of a stocked motor, or on new manufacture, the number per order may be limited.
P = New manufacture only.
R = On request.
NA = Not applicable.

7

Code [1] / Variant		80	90	100	112	132	160	180	200	225	250	280	315	355	400
Terminal box															
021	Terminal box LHS (seen from D-end).	NA	NA	NA	NA	NA	P	P	P	P	P	P	P	P	P
022	Cable entry LHS (seen from D-end).	P	P	P	P	P	M	M	M	M	M	M	M	P	P
137	Extended cable connection, low terminal box, “Flying leads”.	NA	NA	NA	NA	NA	P	P	P	P	P	P	P	P	P
157	Terminal box degree of protection IP65.	M	M	M	M	M	M	M	M	M	M	M	M	P	P
180	Terminal box RHS (seen from D-end).	P	P	P	P	P	P	P	P	P	P	P	P	P	P
187	Cable glands of non-standard design.	NA	NA	NA	NA	NA	R	R	R	R	R	R	R	R	R
380	Separate terminal box for temperature detectors, std. Material.	NA	NA	NA	NA	NA	P	P	P	P	P	P	P	P	P
400	4 x 90 degr turnable terminal box.	S	S	S	S	S	M	M	S	S	S	S	S	S	S
402	Terminal box adapted for Al cables.	NA	NA	NA	NA	NA	NA	NA	NA	NA	NA	S	S	S	S
413	Extended cable connection, no terminal box.	NA	NA	NA	NA	NA	NA	NA	NA	NA	NA	P	P	P	P
418	Separate terminal box for auxiliaries, std. Material.	NA	NA	NA	NA	NA	P	P	P	P	P	P	P	P	P
447	Top mounted separate terminal box for monitoring equipment.	NA	NA	NA	NA	NA	NA	NA	NA	NA	NA	M	M	P	NA
466	Terminal box at N-end.	NA	NA	NA	NA	NA	R	R	R	R	R	P	P	P	P
468	Cable entry from D-end.	M	M	M	M	M	M	M	M	M	M	P	P	P	P
469	Cable entry from N-end.	M	M	M	M	M	M	M	M	M	M	P	P	P	P
567	Separate terminal box material: Cast Iron.	NA	NA	NA	NA	NA	P	P	P	P	P	P	P	P	P
568	Separate terminal box for heating elements, std. Material.	NA	NA	NA	NA	NA	P	P	P	P	P	P	P	P	P
569	Separate terminal box for brakes.	NA	NA	NA	NA	NA	P	P	P	P	P	P	P	P	P
729	Cable flanges without holes/ Blank gland plates.	P	P	P	P	P	P	P	P	P	P	P	P	P	P
730	Prepared for NPT cable glands.	P	P	P	P	P	P	P	P	P	P	P	P	P	P
732	Standard cable gland, Ex d IIB, armoured cable.	NA	NA	NA	NA	NA	M	M	M	M	M	M	M	P	P
733	Standard cable gland, Ex d IIB, non-armoured cable.	NA	NA	NA	NA	NA	M	M	M	M	M	M	M	P	P
736	Standard cable gland Ex e acc. to EN-Standards.	M	M	M	M	M	S	S	S	S	S	S	S	S	S
737	Standard cable gland Ex e with clamping device acc. to EN-Standards.	M	M	M	M	M	M	M	M	M	M	M	M	P	P
741	Motor equipped with E x e terminal box (EN 50019).	NA	NA	NA	NA	NA	M	M	M	M	M	M	M	P	P
743	Painted flange for cable glands.	NA	NA	NA	NA	NA	M	M	M	M	M	M	M	P	P
744	Stainless steel flange for cable glands.	NA	NA	NA	NA	NA	M	M	M	M	M	M	M	P	P
745	Painted steel flange equipped with brass cable glands.	P	P	P	P	P	M	M	M	M	M	M	M	P	P
746	Stainless steel cable flange equipped with standard brass cable glands.	NA	NA	NA	NA	NA	P	P	P	P	P	P	P	P	P
Testing															
140	Test confirmation.	NA	NA	NA	NA	NA	NA	NA	NA	NA	NA	NA	NA	NA	NA
145	Type test report from a catalogue motor, 400V 50Hz.	M	M	M	M	M	M	M	M	M	M	M	M	P	P
146	Type test with report for motor from specific delivery batch.	R	R	R	R	R	P	P	P	P	P	P	P	P	P
148	Routine test report.	M	M	M	M	M	M	M	M	M	M	M	M	P	P
150	Customer witnessed testing. Specify test procedure with other codes.	P	P	P	P	P	P	P	P	P	P	P	P	P	P
221	Type test and multi-point load test with report for motor from specific delivery batch.	P	P	P	P	P	P	P	P	P	P	P	P	P	P
222	Torque/speed curve, type test and multi-point load test with report for motor from specific delivery batch.	P	P	P	P	P	P	P	P	P	P	P	P	P	P
760	Vibration level test.	M	M	M	M	M	M	M	M	M	M	M	M	P	P

[1] Certain variant codes cannot be used simultaneously.

S = Included as standard.
M = On modification of a stocked motor, or on new manufacture, the number per order may be limited.

P = New manufacture only.
R = On request.
NA = Not applicable.

7

Code [1] / Variant		80	90	100	112	132	160	180	200	225	250	280	315	355	400
761	Vibration spectrum test.	P	P	P	P	P	P	P	P	P	P	P	P	P	P
762	Noise level test.	P	P	P	P	P	M	M	M	M	M	M	M	P	P
763	Noise spectrum test.	P	P	P	P	P	P	P	P	P	P	P	P	P	P
764	Test with ABB frequency converter available at ABB test field. ABB standard test procedure.	P	P	P	P	P	P	P	P	P	P	P	P	P	P
Variable speed drives															
181	Rating plate with ABB standard loadability values for VSD operation. Other auxiliaries for VSD operation to be selected as necessary.	NA	NA	NA	NA	NA	M	M	M	M	M	M	M	P	P
182	Pulse sensor mounted as specified.	NA	NA	NA	NA	NA	R	R	R	R	R	P	P	P	P
429	Separate motor cooling (fan top, N-end) and 1024 pulse tacho (Leine & Linde 861) mounted.	NA	NA	NA	NA	NA	NA	NA	NA	NA	NA	P	P	P	P
470	Prepared for hollow shaft pulse tacho (L&L equivalent).	NA	NA	NA	NA	NA	P	P	P	P	P	P	P	P	P
472	1024 pulse tacho (L&L 861).	NA	NA	NA	NA	NA	P	P	P	P	P	P	P	P	P
473	2048 pulse tacho (L&L 861).	NA	NA	NA	NA	NA	P	P	P	P	P	P	P	P	P
474	Separate motor cooling (fan axial, N-end) and prepared for hollow shaft tacho (L&L equivalent).	NA	NA	NA	NA	NA	P	P	P	P	P	P	P	P	P
476	Separate motor cooling (fan axial, N-end) and 1024 pulse tacho (L&L 861).	NA	NA	NA	NA	NA	R	R	R	R	R	R	R	R	R
477	Separate motor cooling (fan axial, N-end) and 2048 pulse tacho (L&L 861).	NA	NA	NA	NA	NA	R	R	R	R	R	R	R	R	R
478	Separate motor cooling (fan top, N-end) and prepared for hollow shaft tacho (L&L equivalent).	NA	NA	NA	NA	NA	NA	NA	P	P	P	P	P	P	P
479	Mounting of other type of pulse tacho with shaft extension, tacho not included.	NA	NA	NA	NA	NA	R	R	R	R	R	P	P	P	P
486	Separate motor cooling (fan top, N-end) and prepared for DC-tacho.	NA	NA	NA	NA	NA	NA	NA	P	P	P	P	P	P	P
510	Separate motor cooling (fan top, N-end) and 2048 pulse tacho (Leine & Linde 861) mounted	NA	NA	NA	NA	NA	NA	NA	NA	NA	NA	P	P	P	P
680	2048 pulse tacho, Ex d, tD, L&L 841910001	NA	NA	NA	NA	NA	R	R	R	R	R	R	R	R	R
701	Insulated bearing at N-end.	NA	NA	NA	NA	NA	NA	NA	NA	NA	NA	M	M	P	P
704	EMC cable gland.	NA	NA	NA	NA	NA	M	M	M	M	M	M	M	P	P
747	1024 pulse tacho, Ex d, tD, L&L 841910002	NA	NA	NA	NA	NA	R	R	R	R	R	R	R	R	R
Y/D starting															
117	Terminals for Y/D start at both speeds (two speed windings).	NA	NA	NA	NA	NA	R	R	R	R	R	P	P	R	R
118	Terminals for Y/D start at high speed (two speed windings).	NA	NA	NA	NA	NA	R	R	R	R	R	P	P	R	R
119	Terminals for Y/D start at low speed (two speed windings).	NA	NA	NA	NA	NA	R	R	R	R	R	P	P	R	R

7

[1] Certain variant codes cannot be used simultaneously.

S = Included as standard.
M = On modification of a stocked motor, or on new manufacture, the number per order may be limited.

P = New manufacture only.
R = On request.
NA = Not applicable.

Dust ignition proof Ex tD (DIP) aluminum motors 3D - Variant codes

Code [1]/Variant		56	63	71	80	90	100	112	132	160	180	200	225	250	280
Balancing															
052	Vibration acc. to Grade A (IEC 60034-14).	P	P	P	P	S	S	S	S	S	S	S	S	S	S
417	Vibration acc. to Grade B (IEC 60034-14).	NA	NA	NA	NA	P	NA	P	P	R	R	R	R	R	R
423	Balanced without key	P	P	P	P	P	P	NA	NA	R	R	R	R	R	R
424	Full key balancing.	P	P	P	P	P	P	P	P	P	P	P	P	P	P
Bearings and Lubrication															
036	Transport lock for bearings.	NA	NA	NA	NA	M	M	M	M	M	M	M	M	M	M
037	Roller bearing at D-end.	NA	NA	NA	NA	M	M	P	P	M	M	M	M	M	M
039	Cold resistant grease.	M	M	M	M	M	M	M	M	NA	NA	NA	NA	NA	NA
040	Heat resistant grease.	M	M	M	M	M	M	M	P	S	S	S	S	S	S
041	Bearings regreasable via grease nipples.	N	N	N	N	M	M	P	P	M	M	S	S	S	S
042	Locked drive-end.	P	M	M	M	S	S	S	S	S	S	S	S	S	S
043	SPM nipples.	NA	NA	NA	NA	NA	NA	NA	NA	M	M	M	M	M	M
057	2RS bearings at both ends.	M	M	M	M	M	M	P	P	M	M	M	M	M	M
058	Angular contact bearing at D-end, shaft force away from bearing.	NA	NA	NA	NA	P	P	P	P	M	M	M	M	M	M
059	Angular contact bearing at N-end, shaft force towards bearing.	NA	NA	NA	NA	P	P	P	P	M	M	M	M	M	M
107	Pt100 2-wire in bearings	NA	NA	NA	NA	NA	NA	NA	NA	NA	NA	R	R	R	R
797	Stainless steel SPM Nipples	NA	NA	NA	NA	NA	NA	NA	NA	P	P	P	P	P	P
Branch standard designs															
079	Silumin-alloy rotor cage.	P	P	P	P	P	P	P	P	NA	NA	NA	NA	NA	NA
142	“Manilla connection”	NA	NA	NA	NA	P	P	P	P	P	P	P	P	P	P
178	Stainless steel / acid proof bolts.	M	M	M	M	M	M	M	M	M	M	M	M	M	M
209	Non-standard voltage or frequency, (special winding).	P	P	P	P	P	P	P	P	P	P	P	P	P	P
217	Cast iron D-end shield (on aluminum motor).	NA	NA	NA	NA	M	M	M	M	R	R	R	R	R	S
232	Cast iron N-end shield (on aluminum motor).	NA	NA	NA	NA	NA	NA	NA	NA	R	R	R	R	R	R
425	Corrosion protected stator and rotor core.	P	P	P	P	P	P	P	P	P	P	P	P	P	P
Cooling system															
068	Metal fan.	NA	NA	M	M	M	M	M	M	M	M	M	M	M	M
075	Cooling method IC418 (without fan).	P	P	P	P	P	P	P	P	NA	NA	NA	NA	NA	NA
183	Separate motor cooling (fan axial, N-end).	NA	NA	M	M	M	M	M	P	NA	NA	NA	NA	NA	NA
Documentation															
141	Binding dimension drawing.	M	M	M	M	M	M	M	M	M	M	M	M	M	M
Drain holes															
065	Plugged existing drain holes.	M	M	M	M	M	M	M	M	S	S	S	S	S	S
Earthing Bolt															
067	External earthing bolt.	M	M	M	M	M	M	M	M	S	S	S	S	S	S
Hazardous Environments															
452	DIP/Ex tD acc. to ATEX directive 94/9/EC , T= 125 °C, cat. 3D, IP55	M	M	M	M	M	M	M	M	NA	NA	NA	NA	NA	NA
453	DIP/Ex tD acc. to ATEX directive 94/9/EC , T= 125 °C, cat. 2D, IP65	NA	NA	M	M	P	P	P	P	NA	NA	NA	NA	NA	NA
454	DIP/Ex tD acc. to ATEX directive 94/9/EC , T= 125 °C, cat. 3D, IP65	NA	NA	NA	NA	NA	NA	NA	NA	M	M	M	M	M	M

[1] Certain variant codes cannot be used simultaneously.

S = Included as standard.
M = On modification of a stocked motor, or on new manufacture, the number per order may be limited.

P = New manufacture only.
R = On request.
NA = Not applicable.

7

Code [1]/Variant		56	63	71	80	90	100	112	132	160	180	200	225	250	280
480	Ex nA II acc. to ATEX directive 94/9/EC, temp. class T3	NA	NA	NA	NA	NA	NA	NA	NA	M	M	M	M	M	M
804	DIP/Ex tD, IEC 61241, T125 °C, IP55 (zone 22)	NA	NA	NA	NA	NA	NA	NA	NA	M	M	M	M	M	M
Heating elements															
450	Heating element, 100-120V.	M	M	M	M	M	M	M	M	M	M	M	M	M	M
451	Heating element, 200-240V.	M	M	M	M	M	M	M	M	M	M	M	M	M	M
Insulation system															
014	Winding insulation class H.	P	P	P	P	P	P	P	P	NA	NA	NA	NA	NA	NA
405	Special winding insulation for frequency converter supply.	NA	NA	NA	NA	P	P	P	P	P	P	P	P	P	P
Mounting arrangements															
007	IM 3001 flange mounted, IEC flange, from IM 1001 (B5 from B3).	NA	M	M	M	M	M	M	NA	NA	NA	NA	NA	NA	NA
008	IM 2101 foot/flange mounted, IEC flange, from IM 1001 (B34 from B3).	M	M	M	M	M	M	M	M	M	NA	NA	NA	NA	NA
009	IM 2001 foot/flange mounted, IEC flange, from IM 1001 (B35 from B3).	M	M	M	M	M	M	M	M	M	M	M	M	M	M
047	IM 3601 flange mounted, IEC flange, from IM 3001 (B14 from B5).	M	M	M	M	M	M	M	M	M	NA	NA	NA	NA	NA
048	IM 3001 flange mounted, IEC flange, from IM 3601 (B5 from B14).	M	M	M	M	M	M	M	M	NA	NA	NA	NA	NA	NA
066	Modified for non-standard mounting position (please specify IM xxxx), (must be ordered for all mounting arrangements exluding IM B3 (1001) and IM B5 (3001).	M	M	M	M	M	M	M	M	NA	NA	NA	NA	NA	NA
078	(IM 3601) Flange mounted, DIN C-flange.	NA	NA	P	P	NA	NA	NA	NA	NA	NA	NA	NA	NA	NA
080	(IM 3001) Flange mounted, DIN A-flange.	NA	NA	P	NA	NA	M	NA	NA	NA	NA	NA	NA	NA	NA
090	(IM 2101) foot/flange mounted, DIN C-flange, from IM 1001 (B34 from B3).	NA	NA	P	P	NA	NA	NA	NA	NA	NA	NA	NA	NA	NA
091	(IM 2001) foot/flange mounted, DIN A-flange, from IM 1001 (B35 from B3).	NA	NA	P	NA	M	M	NA	NA	NA	NA	NA	NA	NA	NA
093	IM 3601 flange mounted, IEC flange, from IM 1001 (B14 from B3).	M	NA	M	M	M	M	M	NA	NA	NA	NA	NA	NA	NA
200	Flange ring holder.	P	P	M	M	M	M	M	M	NA	NA	NA	NA	NA	NA
216	Flange ring FF 85.	NA	NA	M	M	NA	NA	NA	NA	NA	NA	NA	NA	NA	NA
218	Flange ring FT 85.	NA	NA	M	M	M	NA	NA	NA	NA	NA	NA	NA	NA	NA
219	Flange ring FT 100.	NA	NA	M	M	M	NA	NA	NA	NA	NA	NA	NA	NA	NA
220	Flange ring FF 100.	NA	NA	M	M	M	NA	NA	NA	NA	NA	NA	NA	NA	NA
223	Flange ring FF 115.	NA	NA	M	M	M	NA	NA	NA	NA	NA	NA	NA	NA	NA
224	Flange ring FT 115.	NA	NA	M	M	M	NA	NA	NA	NA	NA	NA	NA	NA	NA
226	Flange ring FF 130.	NA	NA	M	M	M	M	M	NA	NA	NA	NA	NA	NA	NA
227	Flange ring FT 130.	NA	NA	M	M	M	M	M	NA	NA	NA	NA	NA	NA	NA
229	Flange FT 130.	NA	NA	NA	NA	M	M	M	NA	NA	NA	NA	NA	NA	NA
233	Flange ring FF 165.	NA	NA	M	M	M	M	M	NA	NA	NA	NA	NA	NA	NA
234	Flange ring FT 165.	NA	NA	M	M	M	M	M	NA	NA	NA	NA	NA	NA	NA
235	Flange FF 165.	NA	NA	NA	NA	M	M	M	NA	NA	NA	NA	NA	NA	NA
236	Flange FT 165.	NA	NA	NA	NA	NA	NA	NA	M	NA	NA	NA	NA	NA	NA
243	Flange ring FF 215.	NA	NA	NA	NA	P	M	M	M	NA	NA	NA	NA	NA	NA
244	Flange ring FT 215.	NA	NA	NA	NA	NA	M	M	M	NA	NA	NA	NA	NA	NA
245	Flange FF 215.	NA	NA	NA	NA	NA	M	M	NA	NA	NA	NA	NA	NA	NA
253	Flange ring FF 265.	NA	NA	NA	NA	NA	NA	NA	M	NA	NA	NA	NA	NA	NA
254	Flange ring FT 265.	NA	NA	NA	NA	NA	NA	NA	M	NA	NA	NA	NA	NA	NA
255	Flange FF 265.	NA	NA	NA	NA	NA	NA	NA	M	NA	NA	NA	NA	NA	NA

[1] Certain variant codes cannot be used simultaneously.

S = Included as standard.
M = On modification of a stocked motor, or on new manufacture, the number per order may be limited.
P = New manufacture only.
R = On request.
NA = Not applicable.

Code [1]/Variant		56	63	71	80	90	100	112	132	160	180	200	225	250	280
260	Flange FT 115.	NA	NA	NA	NA	M	M	NA	NA	NA	NA	NA	NA	NA	NA
306	IM 1001 foot mounted, from IM 3601 (B3 from B14).	M	NA	M	M	M	M	M	NA	NA	NA	NA	NA	NA	NA
307	IM 2101 foot/flange mounted, IEC flange, from IM 3601 (B34 from B14).	NA	NA	M	M	M	M	M	NA	NA	NA	NA	NA	NA	NA
308	IM 2001 foot/flange mounted, IEC flange, from IM 3601 (B35 from B14).	NA	NA	M	M	M	M	M	NA	NA	NA	NA	NA	NA	NA
309	IM 1001 foot mounted, from IM 3001 (B3 from B5).	NA	NA	M	M	M	M	M	NA	NA	NA	NA	NA	NA	NA
310	IM 2101 foot/flange mounted, IEC flange, from IM 3001 (B34 from B5).	NA	NA	M	M	M	M	M	NA	NA	NA	NA	NA	NA	NA
311	IM 2001 foot/flange mounted, IEC flange, from IM 3001 (B35 from B5).	NA	NA	M	M	M	M	M	NA	NA	NA	NA	NA	NA	NA
312	IM 1001 foot mounted, from IM 2101 (B3 from B34).	NA	NA	M	M	M	M	M	NA	NA	NA	NA	NA	NA	NA
313	IM 3601 flange mounted, IEC flange, from IM 2101 (B14 from B34).	NA	NA	M	M	M	M	M	NA	NA	NA	NA	NA	NA	NA
314	IM 3001 flange mounted, IEC flange, from IM 2101 (B5 from B34).	NA	NA	M	M	M	M	M	NA	NA	NA	NA	NA	NA	NA
315	IM 2001 foot/flange mounted, IEC flange, from IM 2101 (B35 from B34).	NA	NA	M	M	M	M	M	NA	NA	NA	NA	NA	NA	NA
316	IM 1001 foot mounted, from IM 2001 (B3 from B35).	NA	NA	M	M	M	M	M	M	NA	NA	NA	NA	NA	NA
317	IM 3601 flange mounted, IEC flange, from IM 2001 (B14 from B35).	NA	NA	M	M	M	M	M	NA	NA	NA	NA	NA	NA	NA
318	IM 3001 flange mounted, IEC flange, from IM 2001 (B5 from B35).	NA	NA	M	M	M	M	M	NA	NA	NA	NA	NA	NA	NA
319	IM 2101 foot/flange mounted, IEC flange, from IM 2001 (B34 from B35).	NA	NA	M	M	M	M	M	NA	NA	NA	NA	NA	NA	NA
Painting															
114	Special paint colour, standard grade.	M	M	M	M	M	M	M	M	M	M	M	M	M	M
179	Special paint specification.	NA	NA	NA	NA	P	P	P	P	R	R	R	R	R	R
Protection															
005	Metal protective roof, vertical motor, shaft down.	M	M	M	M	M	M	M	M	M	M	M	M	M	M
072	Radial seal at D-end.	M	M	M	M	M	M	M	M	R	R	R	R	R	R
073	Sealed against oil at D-end.	M	M	M	M	NA	NA	NA	NA	NA	NA	NA	NA	NA	NA
076	Draining holes with plugs. Felt plugs.	S	S	S	S	NA	NA	NA	NA	NA	NA	NA	NA	NA	NA
158	Degree of protection IP65.	M	M	M	M	M	M	M	P	NA	NA	NA	NA	NA	NA
211	Weather protected, IP xx W	NA	NA	NA	NA	P	P	P	P	NA	NA	NA	NA	NA	NA
403	Degree of protection IP56.	M	M	M	M	M	M	P	P	NA	NA	NA	NA	NA	NA
404	Degree of protection IP56, without fan and fan cover	P	P	P	P	P	P	P	P	NA	NA	NA	NA	NA	NA
784	Gamma-seal at D-end.	NA	NA	NA	NA	M	M	NA	NA	M	M	M	M	M	M
Rating & instruction plates															
002	Restamping voltage, frequency and output, continuous duty.	M	M	M	M	M	M	M	M	M	M	M	M	M	M
003	Individual serial number.	P	P	P	P	M	M	M	M	S	S	S	S	S	S
004	Additional text on std rating plate (max 12 digits on free text line)	NA	NA	NA	NA	NA	NA	M	M	NA	NA	NA	NA	NA	NA
095	Restamping output (maintained voltage, frequency), intermittent duty.	M	M	M	M	M	M	M	M	R	R	R	R	R	R
098	Stainless rating plate.	M	M	M	M	M	M	M	M	NA	NA	NA	NA	NA	NA
135	Mounting of additional identification plate, stainless.	NA	M	M	M	M	M	M	M	NA	NA	NA	NA	NA	NA
138	Mounting of additional identification plate, aluminum.	M	M	M	M	M	M	M	M	M	M	M	M	M	M
139	Additional identification plate delivered loose.	M	M	M	M	M	M	M	M	M	M	M	M	M	M
160	Additional rating plate affixed.	M	M	M	M	M	M	M	M	M	M	M	M	M	M

[1] Certain variant codes cannot be used simultaneously.

S = Included as standard.
M = On modification of a stocked motor, or on new manufacture, the number per order may be limited.
P = New manufacture only.
R = On request.
NA = Not applicable.

7

Code [1]/Variant		56	63	71	80	90	100	112	132	160	180	200	225	250	280
161	Additional rating plate delivered loose.	M	M	M	M	M	M	M	M	M	M	M	M	M	M
162	Rating plate fixed to stator.	NA	NA	NA	NA	M	M	M	M	S	S	S	S	S	S
163	Frequency converter rating plate. Rating data according to quotation.	NA	NA	NA	NA	NA	NA	NA	NA	M	M	M	M	M	M
198	Aluminum rating plate.	S	S	S	S	M	M	M	M	S	S	S	S	S	S
Shaft & rotor															
069	Two shaft extensions as per basic catalogue.	P	P	P	P	P	P	P	P	R	R	R	R	R	R
070	One or two special shaft extensions, standard shaft material.	P	P	P	P	P	P	P	P	R	R	R	R	R	R
131	Motor delivered with half key (Key not exceeding shaft diameter)	NA	NA	NA	NA	NA	NA	NA	NA	M	M	M	M	M	M
165	Shaft extension with open key-way.	P	P	P	P	P	P	P	P	NA	NA	NA	NA	NA	NA
410	Stainless steel shaft (standard or non-standard design).	P	P	P	P	P	P	P	P	NA	NA	NA	NA	NA	NA
Stator winding temperature sensors															
121	Bimetal detectors, break type (NCC), (3 in series), 130°C, in stator winding.	M	M	M	M	M	M	M	M	M	M	M	M	M	M
122	Bimetal detectors, break type (NCC), (3 in series), 150°C, in stator winding.	M	M	M	M	M	M	M	M	M	M	M	M	M	M
123	Bimetal detectors, break type (NCC), (3 in series), 170°C, in stator winding.	M	M	M	M	M	M	P	P	NA	NA	NA	NA	NA	NA
124	Bimetal detectors, break type (NCC), (3 in series), 140°C, in stator winding.	NA	NA	NA	NA	NA	NA	NA	NA	M	M	M	M	M	M
125	Bimetal detectors, break type (NCC), (2x3 in series), 150°C, in stator winding.	M	M	M	M	M	M	P	P	M	M	M	M	M	M
127	Bimetal detectors, break type (NCC), (3 in series, 130°C & 3 in series, 150°C), in stator winding.	M	M	M	M	M	M	P	P	M	M	M	M	M	M
321	Bimetal detectors, closing type (NO), (3 in parallel), 130°C, in stator winding.	NA	M	M	M	M	M	M	M	NA	NA	NA	NA	NA	NA
322	Bimetal detectors, closing type (NO), (3 in parallel), 150°C, in stator winding.	NA	M	M	M	M	M	M	M	NA	NA	NA	NA	NA	NA
323	Bimetal detectors, closing type (NO), (3 in parallel), 170°C, in stator winding.	NA	NA	NA	NA	P	P	P	P	NA	NA	NA	NA	NA	NA
325	Bimetal detectors, closing type (NO), (2x3 in parallel), 150°C, in stator winding.	NA	NA	NA	NA	P	P	P	P	NA	NA	NA	NA	NA	NA
327	Bimetal detectors, closing type (NO), (3 in parallel, 130°C & 3 in parallel, 150°C), in stator winding.	NA	NA	NA	NA	P	P	P	P	NA	NA	NA	NA	NA	NA
435	PTC - thermistors (3 in series), 130°C, in stator winding.	M	M	M	M	M	M	M	M	M	M	M	M	M	M
436	PTC - thermistors (3 in series), 150°C, in stator winding.	M	M	M	M	M	M	M	M	M	M	S	S	S	S
437	PTC - thermistors (3 in series), 170°C, in stator winding.	M	M	M	M	M	M	M	M	NA	NA	NA	NA	NA	NA
439	PTC - thermistors (2x3 in series), 150°C, in stator winding.	M	M	M	M	M	M	M	P	M	M	M	M	M	M
440	PTC - thermistors (3 in series, 110°C & 3 in series, 130°C), in stator winding.	M	M	M	M	NA	NA	NA	NA	NA	NA	NA	NA	NA	NA
441	PTC - thermistors (3 in series, 130°C & 3 in series, 150°C), in stator winding.	M	M	M	M	M	M	P	M	M	M	M	M	M	M
442	PTC - thermistors (3 in series, 150°C & 3 in series, 170°C), in stator winding.	M	M	M	M	NA	NA	NA	NA	M	M	M	M	M	M
445	Pt-100 2-wire in stator winding, 1 per phase	NA	NA	NA	NA	NA	NA	NA	NA	M	M	M	M	M	M
446	Pt-100 2-wire in stator winding, 2 per phase	NA	NA	NA	NA	NA	NA	NA	NA	M	M	M	M	M	M
Terminal box															
015	Motor supplied in D connection.	M	M	M	M	M	M	NA	NA	M	M	M	M	M	M
016	9 terminals in terminal box	NA	NA	NA	NA	P	P	P	P	NA	NA	NA	NA	NA	NA
017	Motor supplied in Y connection.	M	M	M	M	M	M	NA	NA	M	M	M	M	M	M

[1] Certain variant codes cannot be used simultaneously.

S = Included as standard.
M = On modification of a stocked motor, or on new manufacture, the number per order may be limited.
P = New manufacture only.
R = On request.
NA = Not applicable.

7

Code [1]/Variant		56	63	71	80	90	100	112	132	160	180	200	225	250	280
018	D connection in terminal box (reconnection from Y), single phase Steinmetz.	NA	NA	NA	NA	M	M	NA	NA	NA	NA	NA	NA	NA	NA
019	Larger than standard terminal box	NA	NA	NA	NA	NA	NA	NA	NA	R	R	R	R	R	NA
021	Terminal box LHS (seen from D-end).	NA	NA	M	M	P	P	NA	NA	NA	NA	P	P	P	P
022	Cable entry LHS (seen from D-end).	M	M	S	S	NA	NA	NA	NA	P	P	P	P	P	P
136	Extended cable connection, standard terminal box.	M	M	M	M	M	M	NA	NA	R	R	R	R	R	R
137	Extended cable connection, low terminal box, “Flying leads”.	M	M	M	M	P	P	P	P	NA	NA	NA	NA	NA	NA
157	Terminal box degree of protection IP65.	P	P	P	P	NA	NA	NA	NA	S	S	S	S	S	S
180	Terminal box RHS (seen from D-end).	NA	NA	M	M	P	P	P	NA	NA	NA	P	P	P	P
187	Cable glands of non-standard design.	NA	NA	NA	NA	NA	NA	NA	NA	R	R	R	R	R	R
230	Standard metal cable glands.	M	M	M	M	M	M	M	M	M	M	M	M	M	M
375	Standard plastic cable gland	M	M	M	M	M	M	M	M	NA	NA	NA	NA	NA	NA
376	Two standard plastic cable glands	M	M	M	M	M	M	M	M	NA	NA	NA	NA	NA	NA
418	Separate terminal box for auxiliaries, std. material	NA	NA	NA	NA	NA	NA	NA	NA	M	M	M	M	M	M
731	Two standard metal cable glands.	M	M	M	M	M	M	M	M	M	M	M	M	M	M
732	Standard cable gland, EEx d IIB, armoured cable.	M	M	M	M	NA	NA	NA	NA	NA	NA	NA	NA	NA	NA
738	Prepared for metric cable glands.	NA	NA	NA	NA	NA	NA	NA	NA	S	S	S	S	S	S
Testing															
140	Test confirmation	M	M	M	M	NA	NA	NA	NA	M	M	M	M	M	M
145	Type test report from a catalogue motor, 400V 50Hz.	M	M	M	M	M	M	M	M	M	M	M	M	M	M
146	Type test with report for motor from specific delivery batch.	P	P	M	M	M	M	M	M	M	M	M	M	M	M
147	Type test with report for motor from specific delivery batch, customer witnessed.	P	P	M	M	M	M	M	M	M	M	M	M	M	M
148	Routine test report.	P	M	M	M	M	M	M	M	M	M	M	M	M	M
149	Test according to separate test specification.	NA	NA	M	M	M	M	M	M	R	R	R	R	R	R
153	Reduced test for classification society.	P	M	M	M	M	M	M	M	M	M	M	M	M	M
221	Type test and multi-point load test with report for motor from specific delivery batch.	NA	NA	M	M	M	M	M	M	M	M	M	M	M	M
222	Torque/speed curve, type test and multi-point load test with report for motor from specific delivery batch.	NA	NA	M	M	M	M	M	M	M	M	M	M	M	M
760	Vibration level test	P	P	P	P	M	M	M	M	M	M	M	M	M	M
761	Vibration spectrum test.	NA	NA	NA	NA	NA	NA	NA	NA	R	R	R	R	R	R
762	Noise level test.	P	P	P	P	M	M	M	M	M	M	M	M	M	M
763	Noise spectrum test.	NA	NA	NA	NA	NA	NA	NA	NA	R	R	R	R	R	R
764	Complete test with ABB frequency converter.	NA	NA	NA	NA	NA	NA	NA	NA	R	R	R	R	R	R
Variable speed drives															
181	Rating plate with ABB standard loadability values for VSD operation. Other auxiliaries for VSD operation to be selected as necessary.	S	S	S	S	NA	NA	NA	NA	NA	NA	NA	NA	NA	NA
182	Pulse sensor mounted as specified.	NA	NA	NA	NA	NA	NA	NA	NA	R	R	R	R	R	R
470	Prepared for hollow shaft pulse tacho (L&L equivalent).	NA	NA	NA	NA	NA	NA	NA	NA	M	M	M	M	M	M
472	1024 pulse tacho (L&L 861).	NA	NA	NA	NA	NA	NA	NA	NA	R	R	R	R	R	R
473	2048 pulse tacho (L&L 861).	NA	NA	NA	NA	NA	NA	NA	NA	R	R	R	R	R	R
570	Prepared for hollow shaft pulse tacho (L&L 503).	NA	NA	NA	NA	NA	NA	NA	NA	M	M	M	M	M	M
701	Insulated bearing at N-end.	NA	NA	NA	NA	NA	NA	NA	NA	NA	NA	M	M	M	M
704	EMC cable gland.	NA	NA	NA	NA	P	P	P	P	M	M	M	M	M	M
Y/D starting															
118	Terminals for Y/D start at high speed (two speed windings).	NA	NA	NA	NA	P	P	P	P	NA	NA	NA	NA	NA	NA

[1] Certain variant codes cannot be used simultaneously.

S = Included as standard.
M = On modification of a stocked motor, or on new manufacture, the number per order may be limited.
P = New manufacture only.
R = On request.
NA = Not applicable.

7

Dust ignition proof Ex tD (DIP) 3D cast iron motors - Variant codes

Code [1] / Variant		71	80	90	100	112	132	160	180	200	225	250	280	315	355	400
Balancing																
052	Vibration acc. to Grade A (IEC 60034-14).	S	S	S	S	S	S	S	S	S	S	S	S	S	S	S
417	Vibration acc. to Grade B (IEC 60034-14).	NA	NA	NA	NA	NA	NA	P	P	P	P	P	P	P	P	P
424	Full key balancing.	NA	NA	NA	NA	NA	NA	P	P	P	P	P	P	P	P	P
Bearings and Lubrication																
036	Transport lock for bearings.	NA	NA	NA	NA	NA	NA	M	M	M	M	M	P	P	P	P
037	Roller bearing at D-end.	NA	NA	NA	NA	NA	NA	M	M	M	M	M	M	M	NA	NA
040	Heat resistant grease.	S	S	S	S	S	S	S	S	S	S	S	S	S	S	S
041	Bearings regreasable via grease nipples.	NA	NA	NA	NA	NA	NA	S	S	S	S	S	S	S	S	S
043	SPM nipples.	NA	NA	NA	NA	NA	NA	S	S	S	S	S	S	S	S	S
058	Angular contact bearing at D-end, shaft force away from bearing.	NA	NA	NA	NA	NA	NA	P	P	P	P	P	P	P	P	P
107	Pt100 2-wire in bearings.	NA	NA	NA	NA	NA	NA	P	P	P	P	P	P	P	P	P
130	Pt100 3-wire in bearings.	NA	NA	NA	NA	NA	NA	P	P	P	P	P	P	P	P	P
194	2Z bearings greased for life at both ends.	S	S	S	S	S	S	M	M	M	M	M	NA	NA	NA	NA
433	Outlet grease collector.	NA	NA	NA	NA	NA	NA	NA	NA	NA	NA	NA	P	P	P	P
796	Grease nipples JIS B 1575 PT 1/8 Type A.	NA	NA	NA	NA	NA	NA	P	P	P	P	P	P	P	P	P
797	Stainless steel SPM nipples.	NA	NA	NA	NA	NA	NA	M	M	M	M	M	M	M	P	P
798	Stainless steel grease nipples.	NA	NA	NA	NA	NA	NA	M	M	M	M	M	M	M	P	P
Brakes																
412	Built-on brake.	NA	NA	NA	NA	NA	NA	R	R	R	R	R	R	R	R	R
Branch standard designs																
142	“Manilla connection”.	NA	NA	NA	NA	NA	NA	R	R	R	R	R	R	R	R	R
178	Stainless steel / acid proof bolts.	M	M	M	M	M	M	M	M	M	M	M	M	M	P	P
204	Jacking bolts for foot mounted motors.	NA	NA	NA	NA	NA	NA	P	P	P	P	P	P	P	S	S
209	Non-standard voltage or frequency, (special winding).	NA	NA	NA	NA	NA	NA	P	P	P	P	P	P	P	P	P
396	Motor designed for ambient temperature -20°C to -40°C, wtih space heaters (code 450/451 must be added).	NA	NA	NA	NA	NA	NA	P	P	P	P	P	P	P	P	P
397	Motor designed for ambient temperature -40°C to -55°C, wtih space heaters (code 450/451 must be added).	NA	NA	NA	NA	NA	NA	P	P	P	P	P	P	P	P	P
398	Motor designed for ambient temperature -20°C to -40°C.	NA	NA	NA	NA	NA	NA	P	P	P	P	P	P	P	P	P
399	Motor designed for ambient temperature -40°C to -55°C.	NA	NA	NA	NA	NA	NA	P	P	P	P	P	P	P	P	P
786	Special design shaft upwards (V3, V36, V6) for outdoor mounting.	NA	NA	NA	NA	NA	NA	P	P	P	P	P	NA	NA	NA	NA
Cooling system																
044	Unidirectional fan for reduced noice level. Rotation clockwise seen from D-end. Available only for 2-pole motors.	NA	NA	NA	NA	NA	NA	NA	NA	NA	NA	NA	P	P	P	S
045	Unidirectional fan for reduced noice level. Rotation counter clockwise seen from D-end. Available only for 2-pole motors.	NA	NA	NA	NA	NA	NA	NA	NA	NA	NA	NA	P	P	P	S
068	Metal fan.	M	M	M	M	M	M	M	M	M	M	M	M	M	P	P
075	Cooling method IC418 (without fan).	NA	NA	NA	NA	NA	NA	R	R	R	R	R	R	R	R	NA

[1] Certain variant codes cannot be used simultaneously.

S = Included as standard.
M = On modification of a stocked motor, or on new manufacture, the number per order may be limited.
P = New manufacture only.
R = On request.
NA = Not applicable.

7

Code [1] / Variant		71	80	90	100	112	132	160	180	200	225	250	280	315	355	400
183	Separate motor cooling (fan axial, N-end).	NA	NA	NA	NA	NA	NA	P	P	P	P	P	P	P	P	P
422	Separate motor cooling (fan top or side, N-end).	NA	NA	NA	NA	NA	NA	NA	NA	NA	NA	NA	P	P	P	P
791	Stainless steel fan cover.	NA	NA	NA	NA	NA	NA	NA	NA	NA	P	P	P	P	P	P
Coupling																
035	Assembly of customer supplied coupling-half.	R	R	R	R	R	R	P	P	P	P	P	P	P	P	P
Documentation																
141	Binding dimension drawing.	M	M	M	M	M	M	M	M	M	M	M	M	M	M	M
Drain holes																
065	Plugged existing drain holes.	M	M	M	M	M	M	M	M	M	M	M	M	M	P	P
Earthing Bolt																
067	External earthing bolt.	S	S	S	S	S	S	S	S	S	S	S	S	S	S	S
Hazardous Environments																
452	DIP/Ex tD acc. to ATEX directive 94/9/EC, T= 125 °C, cat. 3D, IP55.	M	M	M	M	M	M	M	M	M	M	M	M	M	P	P
453	DIP/Ex tD acc. to ATEX directive 94/9/EC, T= 125 °C, cat. 2D, IP65.	R	R	R	R	R	R	M	M	M	M	M	M	M	P	P
454	DIP/Ex tD acc. to ATEX directive 94/9/EC, T= 125 °C, cat. 3D, IP65.	M	M	M	M	M	M	M	M	M	M	M	M	M	P	NA
804	DIP/Ex tD, IEC 61241, T125 °C, IP55 (zone 22).	M	M	M	M	M	M	M	M	M	M	M	M	M	P	P
805	DIP/Ex tD, IEC 61241, T125 °C, IP65 (zone 21).	R	R	R	R	R	R	M	M	M	M	M	M	M	P	P
806	DIP/Ex tD, IEC 61241, T125 °C, IP65 (zone 22).	M	M	M	M	M	M	M	M	M	M	M	M	M	P	P
814	Ex tD (DIP) motors, temperature class T 150C	M	M	M	M	M	M	M	M	M	M	M	M	M	P	P
Heating elements																
450	Heating element, 100-120V.	M	M	M	M	M	M	M	M	M	M	M	M	M	P	P
451	Heating element, 200-240V.	M	M	M	M	M	M	M	M	M	M	M	M	M	P	P
Insulation system																
014	Winding insulation class H.	NA	NA	NA	NA	NA	NA	P	P	P	P	P	P	P	P	P
405	Special winding insulation for frequency converter supply.	NA	NA	NA	NA	NA	NA	P	P	P	P	P	P	P	P	P
406	Winding for supply >690<=1000 Volts.	NA	NA	NA	NA	NA	NA	NA	NA	NA	NA	NA	P	P	P	P
Mounting arrangements																
008	IM 2101 foot/flange mounted, IEC flange, from IM 1001 (B34 from B3).	M	M	M	M	M	M	NA	NA	NA	NA	NA	NA	NA	NA	NA
009	IM 2001 foot/flange mounted, IEC flange, from IM 1001 (B35 from B3).	M	M	M	M	M	M	M	M	M	M	M	M	M	P	P
047	IM 3601 flange mounted, IEC flange, from IM 3001 (B14 from B5).	M	M	M	M	M	M	NA	NA	NA	NA	NA	NA	NA	NA	NA
066	Modified for non-standard mounting position (please specify IM xxxx), (must be ordered for all mounting arrangements exluding IM B3 (1001) and IM B5 (3001).	M	M	M	M	M	M	M	M	M	M	M	M	M	M	P
305	Additional lifting lugs.	NA	NA	NA	NA	NA	NA	NA	NA	NA	NA	NA	P	P	P	P
Painting																
106	Paint thickness = 80 µm.	NA	NA	NA	NA	NA	NA	S	S	S	S	S	S	S	S	S
109	Paint thickness = 120 µm.	NA	NA	NA	NA	NA	NA	M	M	M	M	M	M	M	P	P
110	Paint thickness = 160 µm.	NA	NA	NA	NA	NA	NA	M	M	M	M	M	M	M	P	P
111	Offshore two-pack polyamide cured epoxy paint 160 µm.	M	M	M	M	M	M	M	M	M	M	M	P	P	P	P
114	Special paint colour, standard grade.	M	M	M	M	M	M	M	M	M	M	M	M	M	P	P
115	Offshore zink primer painting.	NA	NA	NA	NA	NA	NA	P	P	P	P	P	P	P	P	P
179	Special paint specification.	NA	NA	NA	NA	NA	NA	R	R	R	R	R	R	R	R	R

[1] Certain variant codes cannot be used simultaneously.

S = Included as standard.
M = On modification of a stocked motor, or on new manufacture, the number per order may be limited.
P = New manufacture only.
R = On request.
NA = Not applicable.

7

Code [1] / Variant		71	80	90	100	112	132	160	180	200	225	250	280	315	355	400
Protection																
005	Metal protective roof, vertical motor, shaft down.	M	M	M	M	M	M	M	M	M	M	M	M	M	P	P
072	Radial seal at D-end.	NA	NA	NA	NA	NA	NA	M	M	M	M	M	P	P	P	P
073	Sealed against oil at D-end.	NA	NA	NA	NA	NA	NA	P	P	P	P	P	P	P	P	P
404	Degree of protection IP56, without fan and fan cover	NA	NA	NA	NA	NA	NA	P	P	P	P	P	P	P	NA	NA
783	Labyrinth sealing at D-end.	NA	NA	NA	NA	NA	NA	P	P	P	P	P	P	P	S	S
Rating & instruction plates																
002	Restamping voltage, frequency and output, continuous duty.	M	M	M	M	M	M	M	M	M	M	M	M	M	P	P
095	Restamping output (maintained voltage, frequency), intermittent duty.	NA	NA	NA	NA	NA	NA	M	M	M	M	M	P	P	P	P
098	Stainless rating plate.	S	S	S	S	S	S	S	S	S	S	S	S	S	S	S
135	Mounting of additional identification plate, stainless.	M	M	M	M	M	M	M	M	M	M	M	M	M	P	P
139	Additional identification plate delivered loose.	M	M	M	M	M	M	M	M	M	M	M	M	M	P	P
161	Additional rating plate delivered loose.	M	M	M	M	M	M	M	M	M	M	M	M	M	P	P
163	Frequency converter rating plate. Rating data according to quotation.	NA	NA	NA	NA	NA	NA	M	M	M	M	M	M	M	P	P
Shaft & rotor																
069	Two shaft extensions as per basic catalogue.	NA	NA	NA	NA	NA	NA	P	P	P	P	P	P	P	P	P
070	One or two special shaft extensions, standard shaft material.	NA	NA	NA	NA	NA	NA	P	P	P	P	P	P	P	P	P
164	Shaft extension with closed key-way.	NA	NA	NA	NA	NA	NA	S	S	S	S	S	R	R	R	R
165	Shaft extension with open key-way.	NA	NA	NA	NA	NA	NA	R	R	R	R	R	S	S	S	S
410	Stainless steel shaft (standard or non-standard design).	NA	NA	NA	NA	NA	NA	R	R	R	R	R	P	P	P	P
Standards and Regulations																
421	VIK design (Verband der Industriellen Energie- und Kraftwirtschaft e.V.).	M	M	M	M	M	M	P	P	P	P	P	P	P	P	P
773	EEMUA No 132 1988 design	NA	NA	NA	NA	NA	NA	P	P	P	R	R	R	R	R	R
775	Design according to SHELL DEP 33.66.05.31-Gen. January 1999 design.	M	M	M	M	M	M	M	M	M	M	M	M	M	P	P
778	GOST Export/Import Certificate (Russia).	NA	NA	NA	NA	NA	NA	M	M	M	M	M	M	M	P	P
779	SASO Export/Import Certificate (Saudi Arabia).	NA	NA	NA	NA	NA	NA	M	M	M	M	M	M	M	P	P
Stator winding temperature sensors																
120	KTY 84-130 (1 per phase) in stator winding	NA	NA	NA	NA	NA	NA	P	P	P	P	P	P	P	P	P
435	PTC - thermistors (3 in series), 130°C, in stator winding.	M	M	M	M	M	M	M	M	M	M	M	M	M	P	P
436	PTC - thermistors (3 in series), 150°C, in stator winding.	S	S	S	S	S	S	S	S	S	S	S	S	S	S	S
438	PTC -thermistors (3 in series), 190°C, in stator winding.	NA	NA	NA	NA	NA	NA	P	P	P	P	P	P	P	P	P
439	PTC - thermistors (2x3 in series), 150°C, in stator winding.	M	M	M	M	M	M	M	M	M	M	M	M	M	P	P
441	PTC - thermistors (3 in series, 130°C & 3 in series, 150°C), in stator winding.	NA	NA	NA	NA	NA	NA	M	M	M	M	M	M	M	P	P
445	Pt-100 2-wire in stator winding, 1 per phase.	NA	NA	NA	NA	NA	NA	P	P	P	P	P	P	P	P	P
446	Pt-100 2-wire in stator winding, 2 per phase.	NA	NA	NA	NA	NA	NA	P	P	P	P	P	P	P	P	P
502	Pt-100 3-wire in stator winding, 1 per phase.	NA	NA	NA	NA	NA	NA	P	P	P	P	P	P	P	P	P
503	Pt-100 3-wire in stator winding, 2 per phase.	NA	NA	NA	NA	NA	NA	P	P	P	P	P	P	P	P	P

[1] Certain variant codes cannot be used simultaneously.

S = Included as standard.
M = On modification of a stocked motor, or on new manufacture, the number per order may be limited.

P = New manufacture only.
R = On request.
NA = Not applicable.

7

Code [1] / Variant		71	80	90	100	112	132	160	180	200	225	250	280	315	355	400
Terminal box																
021	Terminal box LHS (seen from D-end).	NA	NA	NA	NA	NA	NA	P	P	P	P	P	P	P	P	P
022	Cable entry LHS (seen from D-end).	NA	NA	NA	NA	NA	NA	M	M	M	M	M	M	M	P	P
137	Extended cable connection, low terminal box, “Flying leads”.	NA	NA	NA	NA	NA	NA	P	P	P	P	P	P	P	P	P
180	Terminal box RHS (seen from D-end).	NA	NA	NA	NA	NA	NA	P	P	P	P	P	P	P	P	P
187	Cable glands of non-standard design.	NA	NA	NA	NA	NA	NA	R	R	R	R	R	R	R	R	R
380	Separate terminal box for temperature detectors, std. Material.	NA	NA	NA	NA	NA	NA	P	P	P	P	P	P	P	P	P
400	4 x 90 degr turnable terminal box.	S	S	S	S	S	S	M	M	S	S	S	S	S	S	S
402	Terminal box adapted for Al cables.	NA	NA	NA	NA	NA	NA	NA	NA	NA	NA	NA	S	S	S	S
413	Extended cable connection, no terminal box.	NA	NA	NA	NA	NA	NA	NA	NA	NA	NA	NA	P	P	P	P
418	Separate terminal box for auxiliaries, std. material.	NA	NA	NA	NA	NA	NA	P	P	P	P	P	P	P	P	P
447	Top mounted separate terminal box for monitoring equipment.	NA	NA	NA	NA	NA	NA	NA	NA	NA	NA	NA	M	M	P	NA
466	Terminal box at N-end.	NA	NA	NA	NA	NA	NA	R	R	R	R	R	P	P	P	P
468	Cable entry from D-end.	M	M	M	M	M	M	M	M	M	M	M	P	P	P	P
469	Cable entry from N-end.	M	M	M	M	M	M	M	M	M	M	M	P	P	P	P
567	Separate terminal box material: Cast Iron.	NA	NA	NA	NA	NA	NA	P	P	P	P	P	P	P	P	P
568	Separate terminal box for heating elements, std. Material.	NA	NA	NA	NA	NA	NA	P	P	P	P	P	P	P	P	P
569	Separate terminal box for brakes.	NA	NA	NA	NA	NA	NA	P	P	P	P	P	P	P	P	P
729	Cable flanges without holes/ Blank gland plates.	NA	NA	NA	NA	NA	NA	P	P	P	P	P	P	P	P	P
730	Prepared for NPT cable glands.	NA	NA	NA	NA	NA	NA	P	P	P	P	P	P	P	P	P
731	Two standard metal cable glands.	NA	NA	NA	NA	NA	NA	-	-	-	-	-	-	-	-	-
732	Standard cable gland, Ex d IIB, armoured cable.	NA	NA	NA	NA	NA	NA	M	M	M	M	M	M	M	P	P
733	Standard cable gland, Ex d IIB, non-armoured cable.	NA	NA	NA	NA	NA	NA	M	M	M	M	M	M	M	P	P
736	Standard cable gland Ex e acc. to EN-Standards	M	M	M	M	M	M	S	S	S	S	S	S	S	S	S
737	Standard cable gland Ex e with clamping device acc. to EN-Standards	M	M	M	M	M	M	M	M	M	M	M	M	M	P	P
741	Motor equipped with E x e terminal box (EN 50019)	NA	NA	NA	NA	NA	NA	M	M	M	M	M	M	M	P	P
743	Painted flange for cable glands.	NA	NA	NA	NA	NA	NA	M	M	M	M	M	M	M	P	P
744	Stainless steel flange for cable glands.	NA	NA	NA	NA	NA	NA	M	M	M	M	M	M	M	P	P
745	Painted steel flange equipped with brass cable glands.	NA	NA	NA	NA	NA	NA	M	M	M	M	M	M	M	P	P
746	Stainless steel cable flange equipped with standard brass cable glands.	NA	NA	NA	NA	NA	NA	P	P	P	P	P	P	P	P	P
Testing																
140	Test confirmation.	M	M	M	M	M	M	NA	NA	NA	NA	NA	NA	NA	NA	NA
145	Type test report from a catalogue motor, 400V 50Hz.	M	M	M	M	M	M	M	M	M	M	M	M	M	P	P
146	Type test with report for motor from specific delivery batch.	NA	NA	NA	NA	NA	NA	P	P	P	P	P	P	P	P	P
148	Routine test report.	M	M	M	M	M	M	M	M	M	M	M	M	M	P	P
150	Customer witnessed testing. Specify test procedure with other codes.	NA	NA	NA	NA	NA	NA	P	P	P	P	P	P	P	P	P
221	Type test and multi-point load test with report for motor from specific delivery batch.	NA	NA	NA	NA	NA	NA	P	P	P	P	P	P	P	P	P
222	Torque/speed curve, type test and multi-point load test with report for motor from specific delivery batch.	NA	NA	NA	NA	NA	NA	P	P	P	P	P	P	P	P	P
760	Vibration level test.	NA	NA	NA	NA	NA	NA	M	M	M	M	M	M	M	P	P

[1] Certain variant codes cannot be used simultaneously.

S = Included as standard.
M = On modification of a stocked motor, or on new manufacture, the number per order may be limited.

P = New manufacture only.
R = On request.
NA = Not applicable.

7

Code [1] / Variant		71	80	90	100	112	132	160	180	200	225	250	280	315	355	400
761	Vibration spectrum test.	NA	NA	NA	NA	NA	NA	P	P	P	P	P	P	P	P	P
762	Noise level test.	NA	NA	NA	NA	NA	NA	M	M	M	M	M	M	M	P	P
763	Noise spectrum test.	NA	NA	NA	NA	NA	NA	P	P	P	P	P	P	P	P	P
764	Test with ABB frequency converter available at ABB test field. ABB standard test procedure.	NA	NA	NA	NA	NA	NA	P	P	P	P	P	P	P	P	P
Variable speed drives																
181	Rating plate with ABB standard loadability values for VSD operation. Other auxiliaries for VSD operation to be selected as necessary.	NA	NA	NA	NA	NA	NA	M	M	M	M	M	M	M	P	P
182	Pulse sensor mounted as specified.	NA	NA	NA	NA	NA	NA	R	R	R	R	R	P	P	P	P
429	Separate motor cooling (fan top, N-end) and 1024 pulse tacho (Leine & Linde 861) mounted.	NA	NA	NA	NA	NA	NA	NA	NA	NA	NA	NA	P	P	P	P
470	Prepared for hollow shaft pulse tacho (L&L equivalent).	NA	NA	NA	NA	NA	NA	P	P	P	P	P	P	P	P	P
472	1024 pulse tacho (L&L 861).	NA	NA	NA	NA	NA	NA	P	P	P	P	P	P	P	P	P
473	2048 pulse tacho (L&L 861).	NA	NA	NA	NA	NA	NA	P	P	P	P	P	P	P	P	P
474	Separate motor cooling (fan axial, N-end) and prepared for hollow shaft tacho (L&L equivalent).	NA	NA	NA	NA	NA	NA	P	P	P	P	P	P	P	P	P
476	Separate motor cooling (fan axial, N-end) and 1024 pulse tacho (L&L 861).	NA	NA	NA	NA	NA	NA	R	R	R	R	R	R	R	R	R
477	Separate motor cooling (fan axial, N-end) and 2048 pulse tacho (L&L 861).	NA	NA	NA	NA	NA	NA	R	R	R	R	R	R	R	R	R
478	Separate motor cooling (fan top, N-end) and prepared for hollow shaft tacho (L&L equivalent).	NA	NA	NA	NA	NA	NA	NA	NA	P	P	P	P	P	P	P
479	Mounting of other type of pulse tacho with shaft extension, tacho not included.	NA	NA	NA	NA	NA	NA	R	R	R	R	R	P	P	P	P
486	Separate motor cooling (fan top, N-end) and prepared for DC-tacho.	NA	NA	NA	NA	NA	NA	NA	NA	P	P	P	P	P	P	P
510	Separate motor cooling (fan top, N-end) and 2048 pulse tacho (Leine & Linde 861) mounted	NA	NA	NA	NA	NA	NA	NA	NA	NA	NA	NA	P	P	P	P
680	2048 pulse tacho, Ex d, tD, L&L 841910001	NA	NA	NA	NA	NA	NA	R	R	R	R	R	R	R	R	R
701	Insulated bearing at N-end.	NA	NA	NA	NA	NA	NA	NA	NA	NA	NA	NA	M	M	P	P
704	EMC cable gland.	NA	NA	NA	NA	NA	NA	M	M	M	M	M	M	M	P	P
747	1024 pulse tacho, Ex d, tD, L&L 841910002	NA	NA	NA	NA	NA	NA	R	R	R	R	R	R	R	R	R
Y/D starting																
117	Terminals for Y/D start at both speeds (two speed windings).	NA	NA	NA	NA	NA	NA	R	R	R	R	R	P	P	R	R
118	Terminals for Y/D start at high speed (two speed windings).	NA	NA	NA	NA	NA	NA	R	R	R	R	R	P	P	R	R
119	Terminals for Y/D start at low speed (two speed windings).	NA	NA	NA	NA	NA	NA	R	R	R	R	R	P	P	R	R

7

[1] Certain variant codes cannot be used simultaneously.

S = Included as standard.
M = On modification of a stocked motor, or on new manufacture, the number per order may be limited.

P = New manufacture only.
R = On request.
NA = Not applicable.

DIP motors, aluminum frame, 2 D, 3 D

Dimension drawings

Foot-mounted motor IM 1001, IM B3

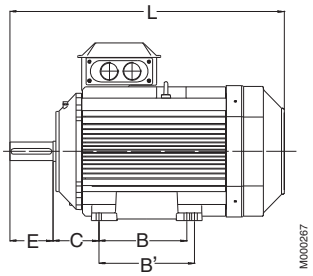

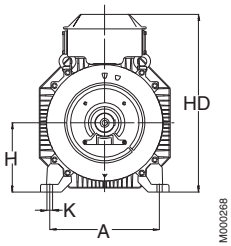

Flange-mounted motor IM 3001, IM B5

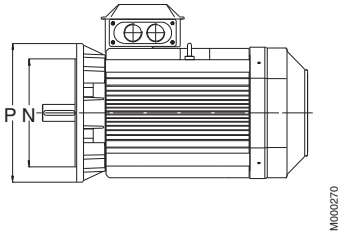

Shaft extension

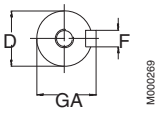

Flanges

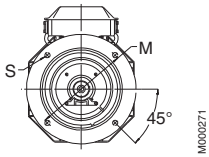

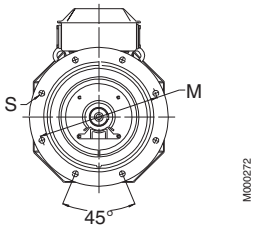

Sizes 90-180

Sizes 200-250

Motor size		IM 1001, IM B3 AND IM 3001, IM B5											IM 1001, IM B3							IM 3001, IM B5			
		D poles		GA poles		F poles		E poles		L max poles		O	A	B	B'	C	HD	K	H	M	N	P	S
		2	4-8	2	4-8	2	4-8	2	4-8	2	4-8												
M2VAD	**71**	14	14	16	16	5	5	30	30	238	238	20	112	90	–	45	176	7	71	130	110	160	10
	80	19	19	21.5	21.5	6	6	40	40	265	265	25	125	100	–	50	190	10	80	165	130	200	12
M3AAD	**90 S**	24	24	27	27	8	8	50	50	295	295	30	140	100	–	56	212	10	90	165	130	200	12
	90 L	24	24	27	27	8	8	50	50	320	320	30	140	125	–	56	212	10	90	165	130	200	12
	100 L	28	28	31	31	8	8	60	60	358.5	385.5	35	160	140	–	63	236	12	100	215	180	250	15
	112 M	28	28	31	31	8	8	60	60	361	361	35	190	140	–	70	258	12	112	215	180	250	14.5
	132	38	38	41	41	10	10	80	80	447	447	50	216	140	178	89	295.5	12	132	265	230	300	14.5
	160	42	42	45	45	12	12	110	110	602.5	602.5	50	254	210	254	108	370	15	160	300	250	350	19
	180 M	48	48	51.5	51.5	14	14	110	110	602.5	602.5	55	279	241	279	121	390	15	180	300	250	350	19
	180 L	48	48	51.5	51.5	14	14	110	110	643.5	643.5	55	279	241	279	121	390	15	180	300	250	350	19
	200 LA	55	55	59	59	16	16	110	110	711.5	711.5	55	318	267	305	133	425	18	200	350	300	400	19
	200 L 2-4	55	55	59	59	16	16	110	110	732	732	55	318	267	305	133	425	18	200	350	300	400	19
	225 M	55	65	59	64	16	18	110	140	773	843	60	356	286 [1)]	311	149	525.5	18	225	400	350	450	19
	225 S		60		64		18		140		803	60	356	286	311 [1)]	149	525.5	18	225	400	350	450	19
	250 M	60	65	64	69	18	18	140	140	866	866	65	406	311 [1)]	349	168	571	22	250	500	450	550	19
M3AA	**160 M/MA 2-8, L 2-6, LB 2-4**	42	42	45	45	12	12	110	110	602.5	602.5	50	254	210	254	108	370	15	160	300	250	350	19
	160 L 8, LB 6-8	42	42	45	45	12	12	110	110	643.5	643.5	50	254	210	254	108	370	15	160	300	250	350	19
	180 M 2-4, L 6-8, LB 2	48	48	51.5	51.5	14	14	110	110	680	680	55	279	241	279	121	405	15	180	300	250	350	19
	180 L 4, LB 4-8	48	48	51.5	51.5	14	14	110	110	700.5	700.5	55	279	241	279	121	405	15	180	300	250	350	19
	200 MLD-2.-C 4	55	55	59	59	16	16	110	110	814	814	55	318	267	305	133	533	18	200	350	300	400	19
	200 all exc. above	55	55	59	59	16	16	110	110	774	774	55	318	267	305	133	533	18	200	350	300	400	19
	225 SMB, -C	55	60	59	64	16	18	110	140	836	836	60	356	286	311	149	578	18	225	400	350	450	19
	225 SMA, -B, -C	55	60	59	64	16	18	110	140	866	891	60	356	286	311	149	578	18	225	400	350	450	19
	225 SMD	55	60	59	64	16	18	110	140	861	891	60	356	286	311	149	578	18	225	400	350	450	19
	250 SMA, -B	60	65	64	69	18	18	140	140	875	875	65	406	311	349	168	626	22	250	500	450	550	19
	250 SMC	60	65	64	69	18	18	140	140	900	900	65	406	311	349	168	626	22	250	500	450	550	19
	280 SMA	65	75	69	79.5	18	20	140	140	875	875	65	457	368	419	190	656	24	280	500	450	550	19
	280 SMB	65	75	69	79.5	18	20	140	140	900	900	65	457	368	419	190	656	24	280	500	450	550	19

IM 3601, IM B14

Motor size	HB	LA	M	N	P	S	T
71							
80							
90	122	14	115	95	140	M8	3
100	136	16	130	110	160	M8	3.5
112	146	20	130	130	160	M8	3.5
132	163.5	18	165	165	200	M10	3.5

Tolerances:

A, B	± 0,8
D, DA	ISO k6 < Ø 50mm ISO m6 > Ø 50mm
F, FA	ISO h9
H	-0.5
N	ISO j6
C, CA	± 0.8

Above table gives the main dimensions in mm.

For detailed drawings please check our web-site 'www.abb.com/motors&generators' or contact ABB.

7

DIP motors, cast iron frame, 2 D

Dimension drawings

Foot-mounted motor IM 1001, IM B3 Flange-mounted motor IM 3001, IM B5

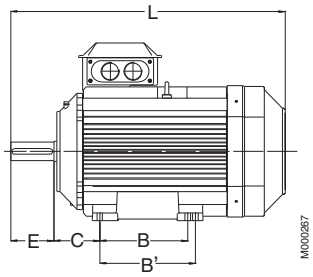

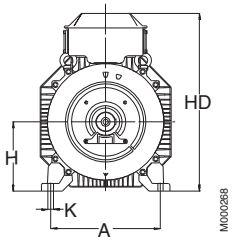

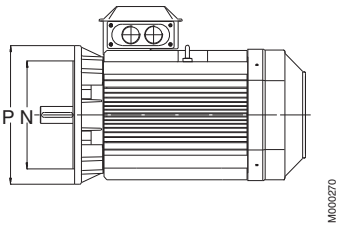

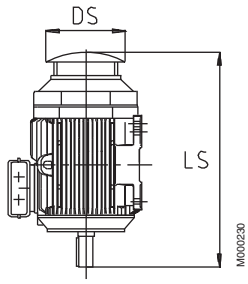

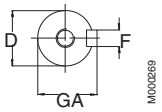

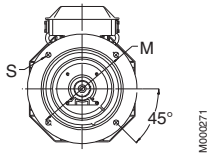

Sizes 71-200

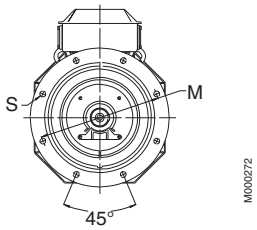

Sizes 225-355

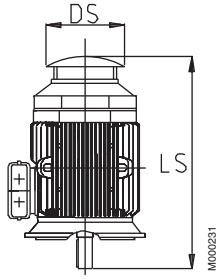

Protective roof, variant code 005

Motor size	IM 1001, IM B3 AND IM 3001, IM B5											IM 1001, IM B3							IM 3001, IM B5				Protective roof		
	D poles		GA poles		F poles		E poles		L max poles		O	A	B	B'	C	HD	K	H	M	N	P	S	DS	LS poles	
	2	4-8	2	4-8	2	4-8	2	4-8	2	4-8														2	4-8
80	19	19	21.5	21.5	6	6	40	40	340	340	20	125	100	125	50	235	10	80	165	130	200	12	160	360	360
90	24	24	27	27	8	8	50	50	405	405	20	140	100	125	56	260	10	90	165	130	200	12	180	430	430
100	28	28	31	31	8	8	60	60	440	440	25	160	140	–	63	280	12	100	215	180	250	14.5	195	465	465
112	28	28	31	31	8	8	60	60	440	440	25	190	140	–	70	295	12	112	215	180	250	14.5	195	465	465
132	38	38	41	41	10	10	80	80	540	540	30	216	140	178	89	340	12	132	265	230	300	14.5	260	570	570
160	42	42	45	45	12	12	110	110	711	711	45	254	210	254	108	388	14.5	160	300	250	350	18.5	328	756	756
180	48	48	51.5	51.5	14	14	110	110	706	706	50	279	241	279	121	426	14.5	180	300	250	350	18.5	359	756	756
200	55	55	59	59	16	16	110	110	774	774	70	318	267	305	133	536	18.5	200	350	300	400	18.5	414	844	844
225	55	60	59	64	16	18	110	140	841	871	80	356	286	311	149	583	18.5	225	400	350	450	18.5	462	921	951
250	60	65	64	69	18	18	140	140	875	875	90	406	311	349	168	646	24	250	500	450	550	18.5	506	965	965
280	65	75	69	79.5	18	20	140	140	1088	1088	100	457	368	419	190	759	24	280	500	450	550	18	555	1190	1190
315 SM_	65	80	69	85	18	22	140	170	1174	1204	115	508	406	457	216	852	30	315	600	550	660	23	624	1290	1320
315 ML_	65	90	69	95	18	25	140	170	1285	1315	115	508	457	508	216	852	30	315	600	550	660	23	624	1401	1431
355 SM_	70	100	62.5	90	20	28	140	210	1409	1479	130	610	500	560	254	958	35	355	740	680	800	23	720	1476	1546
355 ML_	70	100	62.5	90	20	28	140	210	1514	1584	130	610	560	630	254	958	35	355	740	680	800	23	720	1528	1703
355 LK_	70	100	62.5	90	20	28	140	210	1764	1834	130	610	710	900	254	958	35	355	740	680	800	23	720	1633	1703
400 L_	80	110	85	126	22	28	170	210	1851	1891	150	710	900	1000	224	1045	35	400	940	880	1000	28	810	1860	1900
400 LK_	80	100	85	106	22	28	170	210	1851	1891	150	686	710	800	280	1045	35	400	740	680	800	24	810	1860	1900
450	80	120	85	127	22	32	170	210	2147	2187	180	800	1000	1120	250	1169	42	450	1080	1000	1150	28	On request		

7

IM 3601, IM B14 - Available flange alternatives, see also variant codes.

Flange size	Variant code	Flange dimensions P	M	N	S	Motor size 80-132 80	90	100	112	132
FT100	258	120	100	80	M6	S	NA	NA	NA	NA
FT115	260	140	115	95	M8	P	S	NA	NA	NA
FT130	229	160	130	110	M8	P	P	S	S	NA
FT165	236	200	165	130	M10	NA	NA	NA	NA	S
FT215	246	250	215	180	M12	NA	NA	P	P	P
FT265	256	300	265	230	M12	NA	NA	NA	NA	P
FT100	257	120	100	80	M7	S	M	NA	NA	NA
FT115	259	140	115	95	M10	M	S	NA	NA	NA
FT130	228	160	130	110	M10	M	M	S	S	NA
FT165	235	200	165	130	M12	M	M	M	M	S
FT215	245	250	215	180	M14.5	NA	NA	M	M	M
FT265	255	300	265	230	M14.5	NA	NA	NA	NA	M

S = Standard flange
M = Option
NA = Not possible

Tolerances:

A, B	± 0,8
D, DA	ISO k6 < Ø 50mm ISO m6 > Ø 50mm
F, FA	ISO h9
H	-0.5
N	ISO j6
C, CA	± 0.8

Above table gives the main dimensions in mm.

For detailed drawings please check our web-site 'www.abb.com/motors&generators' or contact ABB.

DIP motors, cast iron frame, 3 D

Dimension drawings

Foot-mounted motor IM 1001, IM B3 Flange-mounted motor IM 3001, IM B5

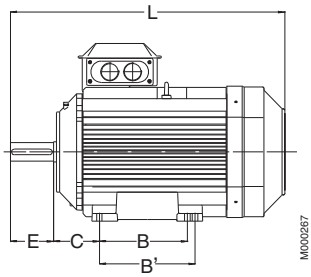

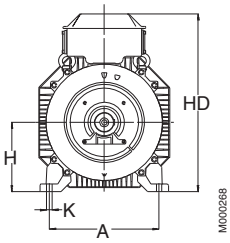

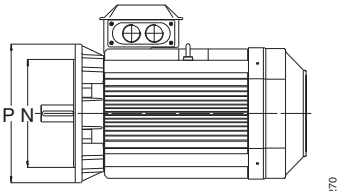

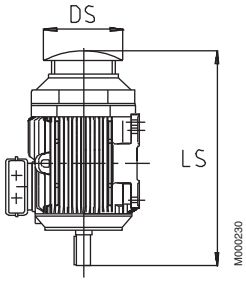

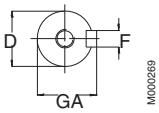

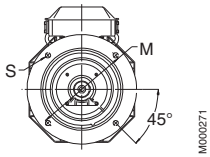

Sizes 71-200

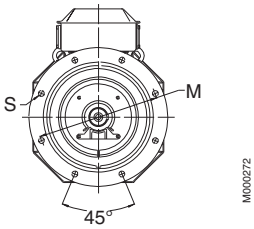

Sizes 225-355

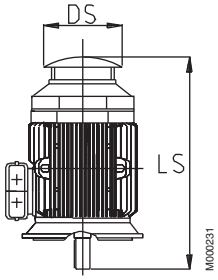

Protective roof, variant code 005

Motor size	IM 1001, IM B3 AND IM 3001, IM B5											IM 1001, IM B3							IM 3001, IM B5				Protective roof		
	D poles		GA poles		F poles		E poles		L max poles		O	A	B	B'	C	HD	K	H	M	N	P	S	DS	LS poles	
	2	4-8	2	4-8	2	4-8	2	4-8	2	4-8														2	4-8
71	14	14	16	16	5	5	30	30	255	255	20	112	90	115	45	200	7	71	130	110	160	10			
80	19	19	21,5	21,5	6	6	40	40	285	285	20	125	100	135	50	230	10	80	165	130	200	12			
90 S	24	24	27	27	8	8	50	50	310	310	20	140	100	140	56	250	10	90	165	130	200	12			
90 L	24	24	27	27	8	8	50	50	335	335	20	140	125	165	56	250	10	90	165	130	200	12			
100	28	28	31	31	8	8	60	60	380	380	25	160	140	180	63	285	12	100	215	180	250	14.5			
112	28	28	31	31	8	8	60	60	395	395	25	190	140	190	70	310	12	112	215	180	250	14.5			
132 S	38	38	41	41	10	10	80	80	465	465	30	216	140	205	89	350	12	132	265	230	300	14.5			
132 M	38	38	41	41	10	10	80	80	505	505	30	216	170	240	89	350	12	132	265	230	300	14.5			
160	42	42	45	45	12	12	110	110	711	711	45	254	210	254	108	388	14.5	160	300	250	350	18.5	328	756	756
180	48	48	51.5	51.5	14	14	110	110	706	706	50	279	241	279	121	426	14.5	180	300	250	350	18.5	359	756	756
200	55	55	59	59	16	16	110	110	774	774	70	318	267	305	133	536	18.5	200	350	300	400	18.5	414	844	844
225	55	60	59	64	16	18	110	140	841	871	80	356	286	311	149	583	18.5	225	400	350	450	18.5	462	921	951
250	60	65	64	69	18	18	140	140	875	875	90	406	311	349	168	646	24	250	500	450	550	18.5	506	965	965
280	65	75	69	79.5	18	20	140	140	1088	1088	100	457	368	419	190	759	24	280	500	450	550	18	555	1190	1190
315 SM_	65	80	69	85	18	22	140	170	1174	1204	115	508	406	457	216	852	30	315	600	550	660	23	624	1290	1320
315 ML_	65	90	69	95	18	25	140	170	1285	1315	115	508	457	508	216	852	30	315	600	550	660	23	624	1401	1431
355 SM_	70	100	62.5	90	20	28	140	210	1409	1479	130	610	500	560	254	958	35	355	740	680	800	23	720	1476	1546
355 ML_	70	100	62.5	90	20	28	140	210	1514	1584	130	610	560	630	254	958	35	355	740	680	800	23	720	1528	1703
355 LK_	70	100	62.5	90	20	28	140	210	1764	1834	130	610	710	900	254	958	35	355	740	680	800	23	720	1633	1703
400 L_	80	110	85	126	22	28	170	210	1851	1891	150	710	900	1000	224	1045	35	400	940	880	1000	28	810	1860	1900
400 LK_	80	100	85	106	22	28	170	210	1851	1891	150	686	710	800	280	1045	35	400	740	680	800	24	810	1860	1900

IM 3601, IM B14

Motor size	Flange size	Flange dimensions				
		P	M	N	S	T
71	C105	105	85	70	M6	2.5
71	C140	140	115	95	M8	3
80	C120	120	100	80	M6	3
80	C160	160	130	110	M8	3.5
90	C140	140	115	95	M8	3
90	C160	160	130	110	M8	3.5
100,112	C160	160	130	110	M8	3.5
100,112	C200	200	165	130	M10	3.5

Tolerances:

A, B	± 0,8
D, DA	ISO k6 < Ø 50mm
	ISO m6 > Ø 50mm
F, FA	ISO h9
H	-0.5
N	ISO j6
C, CA	± 0.8

Above table gives the main dimensions in mm.

For detailed drawings please check our web-site 'www.abb.com/motors&generators' or contact ABB.

7

Dust ignition proof motor construction

Typical exploded view of cast iron motors, frame size 315

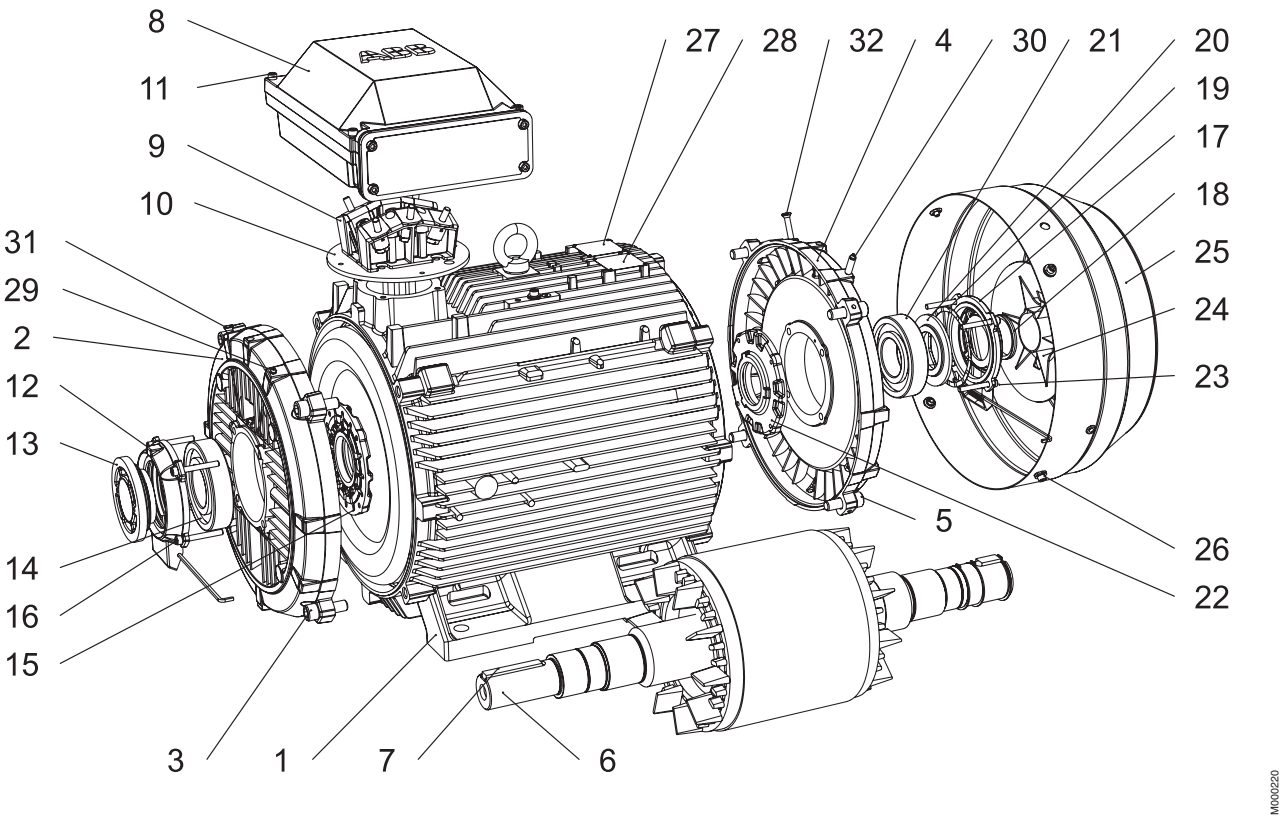

1	Stator frame
2	Endshield, D-end
3	Screws for endshield, D-end
4	Endshield, N-end
5	Screws for endshield, N-end
6	Rotor with shaft
7	Key, D-end
8	Terminal box
9	Terminal board
10	Intermediate flange
11	Screws for terminal box cover
12	Outer bearing cover, D-end
13	Valve disc with labyrinth seal, D-end; standard in 2-pole motors (V-ring in 4-8 pole)
14	Bearing, D-end
15	Inner bearing cover, D-end
16	Screws for bearing cover, D-end
17	Outer bearing cover, N-end
18	Seal, N-end
19	Wave spring
20	Valve disc, N-end
21	Bearing, N-end
22	Inner bearing cover, N-end
23	Screws for bearing cover, N-end
24	Fan
25	Fan cover
26	Screws for fan cover
27	Rating plate
28	Regreasing plate
29	Grease nipple, D-end
30	Grease nipple, N-end
31	SPM nipple, D-end
32	SPM nipple, N-end

Dust ignition proof motors with aluminum frame sizes 71-100 in brief, basic design – Categories 2D and 3D

Motor size			M2VAD		M3AAD	
			71	80	90	100
Stator	Material		Die-cast aluminum alloy.			
	Paint color shade		Munsell blue 8B 4.5/3.25 / NCS 4822-B05G.			
	Paint		Epoxy polyester powder paint, ≥ 30 µm.		Powder coating based on polyester resin ≥ 30 µm.	
Feet	Material		Die-cast alumim alloy. Loose feet			
Bearing end shields	Material		Diecast aluminum alloy.			
	Paint color shade		Munsell blue 8B 4.5/3.25 / NCS 4822-B05G.			
	Paint		Epoxy polyester powder paint, ≥ 30 µm.		Powder coating based on polyester resin ≥ 30 µm.	
Bearings	D-end	2-pole	6203-2Z/C3	6204-2Z/C3	6205-2RS/C3	6306-2RS/C3
		4-8 pole				
	N-end	2-pole	6202-2Z/C3	6203-2Z/C3	6204-2RS/C3	6205-2RS/C3
		4-8 pole				
Axially-locked bearings	Inner bearing cover		Spring washer at the N-end.		D-end	
Bearing seal	D-end		V-ring.			
	N-end		Labyrinth seal.		V-ring.	
Lubrication			Permanently lubricated bearings.			
Terminal box	Material		Die-cast aluminum alloy.			
	Surface treatment		Similar to stator.			
	Screws		Steel 5G. Galvanised and yellow chromated.			
Connections	Knock-out openings		2 x M20 x Pg16		4 x M25	
	Terminal box		Screw terminal. 6 terminals.			
	Screws		M4			
	Max Cu-area, mm^2		6			
Fan	Material		Polypropylene. Reinforced with 20% glass fibre.		Aluminum fan.	
Fan cover	Material		Steel			
Stator winding	Material		Copper			
	Impregnation		Polyester varnish. Tropicalised.			
	Insulation class		Insulation class F. Temperature rise class B, unless otherwise stated.			
	Winding protection		Optional.		PTC-thermistors, 150°C.	
Rotor winding	Material		Die-cast aluminum.			
Balancing method			Half key balancing.			
Key ways			Closed key way.			
Heating elements			25 W			
Drain holes			Drain holes with closable plastic plugs. Open on delivery.		Not included, drain holes sealed on delivery.	
External earthing bolt			As standard.			
Enclosure			DIP 2D = IP 65, DIP 3D = IP 55.			
Cooling method			IC 411.			

Dust ignition proof motors with aluminum frame types M3AAD 112-280 in brief, basic design – Category 2D and 3D

Motor size			M3AAD							
			112	132	160	180	200	225	250	280
Stator	Material		Die-cast aluminum alloy.				Extruded aluminum alloy.			
	Paint colour shade		Munsell blue 8B 4.5/3.25 / NCS 4822-B05G.							
	Paint		Two-component polyurethane paint ≥ 40 µm.							
Feet	Material		Aluminum alloy. Integrated with the stator.				Cast iron, bolted to the stator.			Cast iron
Bearing end shields	Material		Flanged bearing end shields in cast iron, other aluminum alloy				Cast iron			
	Paint colour shade		Munsell blue 8B 4.5/3.25 / NCS 4822-B05G.							
	Paint		Two-component polyurethane paint ≥ 40 µm.							
Bearings	D-end	2-pole	6206-2RS/C3	6208-2RS/C3	6309-2RS/C3	6310-2RS/C3	6312-2RS/C3	6313-2RS/C3	6315-2RS/C3	6315-2RS/C3
		4-8 pole								6316-2RS/C3
	N-end	2-pole	6205-2RS/C3 [1]	6206-2RS/C3 [2]	6209-2RS/C3	6209-2RS/C3	6210-2RS/C3	6212-2RS/C3	6213-2RS/C3	6213-2RS/C3
		4-8 pole								6213-2RS/C3
			[1] 6205-2RS/C3 1-speed Basic design; 6206-2RS/C3 High output design and 2-speed. [2] 6206-2RS/C3 for 132 S/M 1-speed & 132 SBB; 6208-2RS/C3 for 132 M 2-speed & 132 SC/MB/MC/MBA.							
Axially-locked bearings	Inner bearing cover		D-end.							
Bearing seal	D-end		V-ring.				Outer V-rings.			
	N-end		V-ring.				Outer V-rings.			
Lubrication			Permanently lubricated bearings.							
Terminal box	Material		Die-cast alum. alloy. Base integrated with stator.				Deep-drawn steel sheet, bolted to stator.			
	Surface treatment		Similar to stator.				Phosphated. Polyester paint.			
	Screws		Steel 5G. Galvanised.							
Connections	Knock-out openings		4 x (M25 + M20)		2 x (2 x M40 + M16)					
	Flange-openings						2 x FL 13.2 x M40			2xFL21. 2 x M63
	Flange-openings						2 x FL 21.2 x M63 (voltage code S)			
	Terminal box		Cable lugs, 6 terminals.							
	Screws		M5		M6		M10			
	Max Cu-area, mm²		10		35		70			
Fan	Material		Aluminum fan.							
Fan cover	Material		Steel sheet.							
Stator winding	Material		Copper.							
	Impregnation		Polyester varnish.							
	Insulation class		Insulation class F. Temperature rise class B, unless otherwise stated.							
	Winding protection		PTC-thermistors, 150°C							
Rotor winding	Material		Die-cast aluminum.							
Balancing method			Half key balancing.							
Key ways			Closed key way.							
Heating elements			25 W			50 W				
Drain holes			Not included, drain holes sealed on delivery.							
External earthing bolt			As standard.							
Enclosure			IP 65.							
Cooling method			IC 411.							

7

Dust ignition proof motors with aluminum frame types M3AA 112-280 in brief, basic design – Category 2D and 3D

Motor size			M3AA							
			112	132	160	180	200	225	250	280
Stator	Material		Die-cast aluminum alloy.				Extruded aluminum alloy.			
	Paint colour shade		Munsell blue 8B 4.5/3.25 / NCS 4822-B05G.							
	Paint		Polyester powder paint ≥ 50 µm.							
Feet	Material		Aluminum alloy. Integrated with the stator.				Aluminim alloy, bolted to the stator.			Cast iron
Bearing end shields	Material		Die-cast aluminum alloy.			Flanged bearing end shields of cast iron, other die-cast aluminum alloy				Cast iron
	Paint colour shade		Munsell blue 8B 4.5/3.25 / NCS 4822-B05G.							
	Paint		Polyester powder paint ≥ 50 µm.							
Bearings	D-end	2-pole	6206-2Z/C3	6208-2Z/C3	6309-2Z/C3	6310-2Z/C3	6312/C3	6313/C3	6315/C3	6315/C3
		4-8 pole								6316/C3
	N-end	2-pole	6205-2Z/C3	6206-2Z/C3	6209-2Z/C3	6209-2Z/C3	6210/C3	6212/C3	6213/C3	6213/C3
		4-8 pole								6213/C3
Axially-locked bearings	Inner bearing cover		D-end 112-132: Foot motor - a spring washer at N-end presses the rotor against D-end.							
Bearing seal	D-end		V-ring.				Outer and inner V-rings.			
	N-end		Labyrinth seal.				Outer and inner V-rings.			
Lubrication			Permanently lubricated bearings. Grease for bearing temperatures -40 to +160°C.				Valve lubrication. Grease for bearing temperatures -40 to +150°C.			
Terminal box	Material		Die-cast aluminum alloy. Base integrated with stator.				Deep-drawn steel sheet, bolted to stator.			
	Surface treatment		Similar to stator.				Phosphated. Polyester paint.			
	Screws		Steel 5G. Galvanised.							
Connections	Knock-out openings		4 x (M25 + M20)		2 x (2 x M40 + M16)					FL 21, 2 x M63 1 x M16
	Flange-openings						2 x FL 13.2 x M40 2 x FL 21.2 x M63 (volt. code S)			
	Terminal box		Cable lugs, 6 terminals.							
	Screws		M5		M6		M10			
	Max Cu-area, mm²		10		35		70			
Fan	Material		Polypropylene. Reinforced with 20% glass fibre.							
Fan cover	Material		Polypropylene.		Steel sheet. Phosphated. Polyester paint.					
Stator winding	Material		Copper.							
	Impregnation		Polyester varnish. Tropicalised.							
	Insulation class		Insulation class F. Temperature rise class B, unless otherwise stated.							
	Winding protection		Optional.				PTC-thermistors, 150°C			
Rotor winding	Material		Die-cast aluminum.							
Balancing method			Half key balancing.							
Key ways			Closed key way.							
Heating elements			25 W			50 W				
Drain holes			Drain holes with closable plastic plugs. Closed on delivery.							
Enclosure			IP 55.							
Cooling method			IC 411.							

7

Dust ignition proof motors with aluminum frame types M2AA 112-250 in brief, basic design – Category 2D and 3D

Motor size		M2AA						
		112	132	160	180	200	225	250
Stator	Material	Die-cast aluminum alloy.					Extruded aluminum alloy.	
	Paint color shade	Blue, Munsell 8B 4.5/3.25 / NCS 4822 B05G						
	Paint	Polyester powder paint, thickness ≥ 50 µm						
Feet	Material	Aluminum alloy. Integrated with the stator.			Cast iron bolted to the stator.			
Bearing end shields	Material	Die-cast aluminum alloy.			Flanged bearing end shields of cast iron, other die-cast aluminum.			
	Paint color shade	Blue, Munsell 8B 4.5/3.25 / NCS 4822 B05G						
	Paint	Polyester powder paint, thickness ≥ 50 µm						
Bearings	D-end	6206 -2Z/C3	6208-2Z/C3	6309-2Z/C3	6310-2Z/C3	6312/C3	6313/C3	6315/C3
	N-end	6205-2Z/C3	6206-2Z/C3	6209-2Z/C3	6209-2Z/C3	6209-2Z/C3	6210-C3	6212-C3
Axially-locked bearings	Inner bearing cover	D-end. [1]		D-end.				
		[1] Sizes 112-132: A spring washer at the N-end presses the motor towards the D-end.						
Bearing seal	D-end	V-ring.					Outer and inner V-rings.	
	N-end	Labyrinth seal					Outer and inner V-rings.	
Lubrication		Permanently lubricated bearings. Grease for bear. tempr. -40 to +160°C.					Valve lubrication.Grease for bear. temp. -40 to +160°C.	
Terminal box	Material	Die-cast aluminum alloy. Base integrated with stator.					Deep-drawn steel sheet, bolted to stator.	
	Surface treatment	Similar to stator.					Phosphated. Polyester paint.	
	Srews	Steel 5G. Galvanised.						
Connections	Knock-out openings	4 (M25 + M20)		2 x (2 x M40 + M16)				
	Flange-openings						2 x FL 13.2 x M40 2 x FL 21.2 x M63 (voltage code S	
	Terminal box	Cable lugs. 6 terminals.						
	Screws	M5		M6			M10	
	Max Cu-area, mm2	10		35			70	
Fan	Material	Polypropylene. Reinforced with 20% glass fibre.						
Fan cover	Material	Polypropylene.		Steel sheet. Phosphated. Polyester paint.				
Stator winding	Material	Copper						
	Impregnation	Polyester vanish. Tropicalised.						
	Insulation class	Insulation class F. Temperature rise class B, unless otherwise stated.						
	Winding protection	Optional.					PTC-thermistors, 150°C	
Rotor winding	Material	Die-cast aluminum.						
Balancing method		Half key balancing.						
Key ways		Closed key way						
Heating elements		25 W			50 W			
Drain holes		Drain holes with closable plastic plugs. Closed on delivery.						
Enclosure		IP55.						
Cooling method		IC411.						

Dust ignition proof cast iron motors in brief, basic design - 2D

Motor size		80	90	100	112	132	160	180
Stator	Material	Cast iron EN-GJL-200						
	Paint colour shade	Blue, Munsell 8B 4.5/3.25 / NCS 4822 B05G						
	Paint	Two-pack epoxy paint, thickness > 80 µm.						
Bearing end shields	Material	Cast iron EN-GJL-150					Cast iron EN-GJL-200	
	Paint colour shade	Blue, Munsell 8B 4.5/3.25 / NCS 4822 B05G						
	Paint	Two-pack epoxy paint, thickness > 80 µm.						
Bearings	D-end 2-pole	6205-2Z/C3	6205-2Z/C3	6206-2Z/C3	6206-2Z/C3	6208-2Z/C3	6309/C3	6310/C3
	4-8 pole							
	N-end 2-pole	6205-2Z/C3	6205-2Z/C3	6206-2Z/C3	6206-2Z/C3	6208-2Z/C3	6309/C3	6309/C3
	4-8 pole							
Axially locked bearings	Inner bearing cover	On request					As standard, locked at D-end	
Bearing seal		2RS-integral seals					Gamma-ring as std, radial seal on request	
Lubrication		Permanent grease lubrication.					Regreasable bearings as std, lifetime lubrication as option	
SPM-nipples		–					As standard	
Rating plate	Material	Stainless steel 0.80 Cr 18 Ni9					Stainless steel	
Terminal box	Frame material	Cast iron EN-GJL-150					Cast iron EN-GJL-200	
	Cover material	Cast ironEN-GJL-150					Cast iron EN-GJL-200	
	Screws	Steel 5G, coated with zinc and yellow chromated						
Connections	Cable entries	2xM25x1.5		2xM32x1.5			2xM40x1.5	
	Terminals	6 terminals for connection with cable lugs (not included)						
Fan	Material	Reinforced glass fiber laminate or aluminum						
Fan cover	Material	Steel					Zinc coated steel	
	Paint colour shade	Blue, Munsell 8B 4.5/3.25 / NCS 4822 B05G						
	Paint	Two-pack epoxy paint, thickness > 80 µm.						
Stator winding	Material	Copper						
	Insulation	Insulation class F						
	Winding protection	3 pcs thermistors						
Rotor winding	Material	Pressure die-cast aluminum						
Balancing method		Half key balancing						
Key ways		Open key way					Closed key-way	
Heating elements	Optional	25 W					25 W	50 W
Drain holes		Optional					As standard, open on delivery	
External earthing bolt		As standard						
Enclosure		IP 55, higher protection on request						
Cooling method		IC 411						

Dust ignition proof cast iron motors in brief, basic design - 2D

Motor size		200	225	250	280	315	355	400
Stator	Material	Cast iron EN-GJL-200 / GG 20 / GRS 200						
	Paint colour shade	Blue, Munsell 8B 4.5/3.25 / NCS 4822 B05G						
	Paint	Two-pack epoxy paint, thickness > 80 µm.						
Bearing end shields	Material	Cast iron EN-GJL-200 / GG 20 / GRS 200			Cast iron EN-GJL-200/GG20/GRS 200, EN-GJL-250/GG25/GRS 250, EN-GJS-400/GG40/GRS 400			
	Paint colour shade	Blue, Munsell 8B 4.5/3.25 / NCS 4822 B05G						
	Paint	Two-pack epoxy paint, thickness > 80 µm.						
Bearings	D-end 2-pole	6312/C3	6313/C3	6315/C3	6316/C3	6316/C3	6316M/C3	6317/C3
	4-8 pole	6312/C3	6313/C3	6315/C3	6316/C3	6319/C3	6322/C3	6324/C3
	N-end 2-pole	6310/C3	6312/C3	6313/C3	6316/C3	6319/C3	6316M/C3	6317/C3
	4-8 pole	6310/C3	6312/C3	6313/C3	6316/C3	6316/C3	6316/C3	6319/C3
Axially locked bearings	Inner bearing cover	As standard, locked at D-end						
Bearing seal		Gamma-ring as standard, radial seal on request			V-ring as standard, radial seal on request			
Lubrication		Regreasable bearings as standard, lifetime lubrication as option			Regreasable bearings, regreasing nipples, M10x1			
SPM-nipples		As standard			Optional		As standard	
Rating plate	Material	Stainless steel						
Terminal box	Frame material	Cast iron EN-GJL-200/GG 20/GRS 200			Cast iron EN-GJL-150 /GG15 / GRS 150			
	Cover material	Cast iron EN-GJL-200/GG 20/GRS 200			Cast iron EN-GJL-150 /GG15 / GRS 150			
	Cover screws material	Steel 5G, coated with zinc and yellow chromated						
Connections	Cable entries	2xM50x1.5			2xM63x1.5		2xØ60/80 2xØ60	2xØ80 2xØ60/80
	Terminals	6 terminals for connection with cable lugs (not included)						
Fan	Material	Reinforced glass fiber laminate or aluminum			Reinforced glass fiber, aluminum or polypropylene with metal hub			
Fan cover	Material	Zinc coated steel			Steel			
	Paint colour shade	Blue, Munsell 8B 4.5/3.25 / NCS 4822 B05G						
	Paint	Two-pack polyester paint, thickness > 80 µm			Two-pack epoxy polyester paint, thickness > 80 µm.			
Stator winding	Material	Copper						
	Insulation	Insulation class F						
	Winding protection	3 pcs thermistors						
Rotor winding	Material	Pressure die-cast aluminum			Pressure die-cast aluminum or copper			
Balancing method		Half key balancing						
Key ways		Closed key way			Open key way			
Heating elements	Optional	50 W				2 x 50 W	2 x 65 W	
Drain holes		As standard, open on delivery						
External earthing bolt		As standard						
Enclosure		IP 55, higher protection on request						
Cooling method		IC 411						

Dust ignition proof cast iron motors in brief, basic design - 3D

Motor size		71	80	90	100	112	132
Stator	Material	Cast iron EN-GJL-200					
	Paint colour shade	Blue, Munsell 8B 4.5/3.25 / NCS 4822 B05G					
	Paint	Two-pack epoxy paint, thickness > 80 µm.					
Bearing end shields	Material	Cast iron EN-GJL-150					
	Paint colour shade	Blue, Munsell 8B 4.5/3.25 / NCS 4822 B05G					
	Paint	Two-pack epoxy paint, thickness > 80 µm.					
Bearings	D-end 2-pole	6202 WC3	6204 DDUC3	6205 DDUC3	6206 DDUC3	6207 DDUC3	6208 DDUC3
	4-8 pole						
	N-end 2-pole	6202 WC3	6204 DDUC3	6205 DDUC3	6206 DDUC3	6206 DDUC3	6207 DDUC3
	4-8 pole						
Axially locked bearings	Inner bearing cover	On request					
Bearing seal		2RS-integral seals					
Lubrication		Permanent grease lubrication.					
SPM-nipples		–					
Rating plate	Material	Stainless steel 0.80 Cr 18 Ni9					
Terminal box	Frame material	Cast iron EN-GJL-150					
	Cover material	Cast ironEN-GJL-150					
	Screws	Steel 5G, coated with zinc and yellow chromated					
Connections	Cable entries	2xM25x1.5			2xM32x1.5		
	Terminals	6 terminals for connection with cable lugs (not included)					
Fan	Material	Reinforced glass fiber laminate or aluminum					
Fan cover	Material	Steel					
	Paint colour shade	Blue, Munsell 8B 4.5/3.25 / NCS 4822 B05G					
	Paint	Two-pack epoxy paint, thickness > 80 µm.					
Stator winding	Material	Copper					
	Insulation	Insulation class F					
	Winding protection	On request					
Rotor winding	Material	Pressure die-cast aluminum					
Balancing method		Half key balancing					
Key ways		Open key way					
Heating elements	Optional	25 W					
Drain holes		Optional					
External earthing bolt		As standard					
Enclosure		IP 55, higher protection on request					
Cooling method		IC 411					

Dust ignition proof cast iron motors in brief, basic design - 3D

Motor size		160	180	200	225	250	280	315	355	400
Stator	Material	Cast iron EN-GJL-200 / GG 20 / GRS 200								
	Paint colour shade	Blue, Munsell 8B 4.5/3.25 / NCS 4822 B05G								
	Paint	Two-pack epoxy paint, thickness > 80 µm.								
Bearing end shields	Material	Cast iron EN-GJL-200		Cast iron EN-GJL-200 / GG 20 / GRS 200			Cast iron EN-GJL-200/GG20/GRS 200, EN-GJL-250/GG25/GRS 250, EN-GJS-400/ GG40/GRS 400			
	Paint colour shade	Blue, Munsell 8B 4.5/3.25 / NCS 4822 B05G								
	Paint	Two-pack epoxy paint, thickness > 80 µm.								
Bearings	D-end 2-pole	6309/C3	6310/C3	6312/C3	6313/C3	6315/C3	6316/C3	6316/C3	6316M/C3	6317/C3
	4-8 pole							6319/C3	6322/C3	6324/C3
	N-end 2-pole	6309/C3	6309/C3	6310/C3	6312/C3	6313/C3	6316/C3	6319/C3	6316M/C3	6317/C3
	4-8 pole							6316/C3	6316/C3	6319/C3
Axially locked bearings	Inner bearing cover	As standard, locked at D-end								
Bearing seal		Gamma-ring as std, radial seal on request					V-ring as standard, radial seal on request			
Lubrication		Regreasable bearings as std, lifetime lubrication as option					Regreasable bearings, regreasing nipples, M10x1			
SPM-nipples		As standard					Optional		As standard	
Rating plate	Material	Stainless steel								
Terminal box	Frame material	Cast iron EN-GJL-200		Cast iron EN-GJL-200/GG 20/GRS 200			Cast iron EN-GJL-150 /GG15 / GRS 150			
	Cover material	Cast iron EN-GJL-200		Cast iron EN-GJL-200/GG 20/GRS 200			Cast iron EN-GJL-150 /GG15 / GRS 150			
	Cover screws material	Steel 5G, coated with zinc and yellow chromated								
Connections	Cable entries	2xM40x1.5		2xM50x1.5			2xM63x1.5		2xØ60/80 2xØ60	2xØ80 2xØ60/80
	Terminals	6 terminals for connection with cable lugs (not included)								
Fan	Material	Reinforced glass fiber laminate or aluminum					Reinforced glass fiber, aluminum or polypropylene with metal hub			
Fan cover	Material	Zinc coated steel					Steel			
	Paint colour shade	Blue, Munsell 8B 4.5/3.25 / NCS 4822 B05G								
	Paint	Two-pack polyester paint, thickness > 80 µm					Two-pack epoxy polyester paint, thickness > 80 µm.			
Stator winding	Material	Copper								
	Insulation	Insulation class F								
	Winding protection	3 pcs thermistors								
Rotor winding	Material	Pressure die-cast aluminum					Pressure die-cast aluminum or copper			
Balancing method		Half key balancing								
Key ways		Closed key-way					Open key way			
Heating elements	Optional	25 W	50 W	50 W				2 x 50 W	2 x 65 W	
Drain holes		As standard, open on delivery								
External earthing bolt		As standard								
Enclosure		IP 55, higher protection on request								
Cooling method		IC 411								

7

Certificate examples

Nemko

Page 1 of 4

[1] EC-TYPE EXAMINATION CERTIFICATE

[2] Equipment Intended for use in Potentially Explosive Atmospheres Directive 94/9/EC

[3] Type Examination Certificate Number: Nemko 04ATEX1448

[4] Equipment: Asynchronous motors

[5] Applicant: ABB Automation Technologies AB
LV Motors

[6] Address: Örjansgränd 10
SE-721 70 Västerås
Sweden

[7] This equipment and any acceptable variation thereto are specified in the schedule to this certificate and the documents therein referred to.

[8] Nemko AS, notified body number 0470 in accordance with Article 9 of Council Directive 94/9/EC of 23 March 1994, certifies that this equipment or protective system has been found to comply with the Essential Health and Safety requirements relating to the design and construction of equipment and protective systems intended for use in potentially explosive atmospheres given in Annex II to the Directive.

[9] The examination and test results are recorded in confidential report no. 22852Ex01-03

[10] Compliance with the Essential Health and Safety Requirements, with the exception of those listed in the schedule of this certificate, has been assessed by reference to:

CENELEC EN 50014: 1997 +A1:1999, A2:1999
CENELEC EN 50281-1-1: 1998
IEC 61241-0:2004
IEC 61241-1:2004
CENELEC EN 61241-1:2004

[11] If the sign "X" is placed after the certificate number, it indicates that the equipment is subject to special conditions for safe use specified in the schedule to this certificate.

[12] This EC-TYPE EXAMINATION CERTIFICATE relates only to the design, examination and tests of the specified equipment or protective system in accordance to the directive 94/9/EC.
Further requirements of the Directive apply to the manufacturing process and supply of this equipment or protective system. These are not covered by this certificate.

[13] The marking of the equipment shall include the following:

II 2 D T125°C

Ex tD A21 T125°C

Oslo, 2005-02-11

Rolf Hoel
Certification Department

This certificate and its schedules may only be reproduced in its entirety and without any change

Postal address:	*Office address:*	*Telephone:*	*Enterprise number:*
P.O.Box 73 Blindern N-0314 OSLO, NORWAY	Gaustadalléen 30 0373 OSLO	+47 22 96 03 30 *Fax:* +47 22 96 05 50	NO 974404532

M000239

LCIE

1 ATTESTATION D'EXAMEN CE DE TYPE

2 Appareils et systèmes de protection destinés à être utilisés en atmosphères explosibles
Directive 94/9/CE

3 Numéro de l'attestation CE de type
LCIE 02 ATEX 6028

4 Appareil ou système de protection

Moteur asynchrone
Type : M3GP 280... et M3GP 315...

5 Demandeur : ABB OY, Electrical Machines, LV Motors

6 Adresse : PO Box 633
Strömbergin Puistotie 5A
65101 VAASA FINLANDE

7 Cet appareil ou système de protection et ses variantes éventuelles acceptées est décrit dans l'annexe de la présente attestation et dans les documents descriptifs cités en annexe.

8 Le LCIE, organisme notifié sous la référence 0081 conformément à l'article 9 de la directive 94/9/CE du Parlement européen et du Conseil du 23 mars 1994, certifie que cet appareil ou système de protection est conforme aux exigences essentielles en ce qui concerne la sécurité et la santé pour la conception et la construction d'appareils et de systèmes de protection destinés à être utilisés en atmosphères explosibles, données dans l'annexe II de la directive. Les vérifications et épreuves figurent dans notre rapport confidentiel N° 38 334 010 0010 A.

9 Le respect des exigences essentielles en ce qui concerne la sécurité et la santé est assuré par la conformité aux documents suivants :
- EN 50014 (1997)
- EN 50281-1-1 (1998)
- EN 50021 (1999)

10 Le signe X lorsqu'il est placé à la suite du numéro de l'attestation, indique que ce matériel ou système de protection est soumis aux conditions spéciales pour une utilisation sûre, mentionnées dans l'annexe de la présente attestation.

11 La présente attestation d'examen CE de type porte uniquement sur la conception, l'examen et l'essai de l'équipement ou du système de protection spécifié conformément à la directive 94/9/CE.
Toutes autres exigences de la Directive sont applicables au procédé de fabrication et de livraison de cet équipement ou système de protection. Ces derniers ne sont pas couverts par la présente attestation.

12 Le marquage de l'appareil ou du système de protection devra comporter, entre autres indications utiles, les mentions suivantes :

II 2 D et/ou 3G et/ou 3D
EEx nA II T1, T2 ou T3
IP 6X/5X, T ... °C (ex : T 120 °C, T 125 °C)

Fontenay-aux-Roses, le 04 mars 2002

Le Directeur de l'organisme certifi
Manager of the certification bo

Timbre sec/dry seal

Seul le texte en français peut engager la responsabilité du LCIE. Ce document ne peut être reproduit que dans son intég
The LCIE's liability applies only on the French text. This document may only be reproduced in full and without any chang

LABORATOIRE CENTRAL DES INDUSTRIES ELEC

Société anonyme à Directoire et Conseil de surveillance au capital de 15 745 984 euros - RCS Nanterre B 408 36

33, avenue du Général Leclerc - BP n° 8 - F 92266 FONTENAY-AUX-ROSES CEDEX - Tél. : +3

M000240

following Council Directive:

Directive 94/9/EC (ATEX of 23 March 1994).

In respect of product categories the motors are in conformity with provisions of the following harmonized standards:

EN 60079-0 (2004), EN 60079-1 (2004), EN 60079-7 (2003), EN 60079-15 (2005), EN 61241-0 (2006), EN 61241-1 (2004/2006).

Changings of the newest revisions of above standards do not effect the construction of the listed motors, which thus comply with the Essential Health and Safety Requirements in Annex II of said directive.

Note: When installing motors for converter supply applications additional requirements must be respected regarding the motor as well as the installation, as described in the dedicated addendum joined hereafter.

Signed by ----------
Jouni Ikäheimo

Title Product Development Manager

Date February 16th, 2007

ABB Oy

Motors Postal address P.O. Box 633 FI-65101 Vaasa FINLAND	Visiting Address Strömbergin Puistotie 5 A FI-65320 Vaasa FINLAND	Telephone +358 10 22 11 Telefax +358 10 22 47372	Internet www.abb.fi e-mail: first name.last name @fi.abb.com	Business Identity Code: 0763403-0 Domicile: Helsinki

M000209

7

7

High voltage Non-sparking Ex nA and Dust ignition proof motors

Totally enclosed squirrel cage three phase high voltage motors, Sizes 315 - 450, 110 to 750 kW

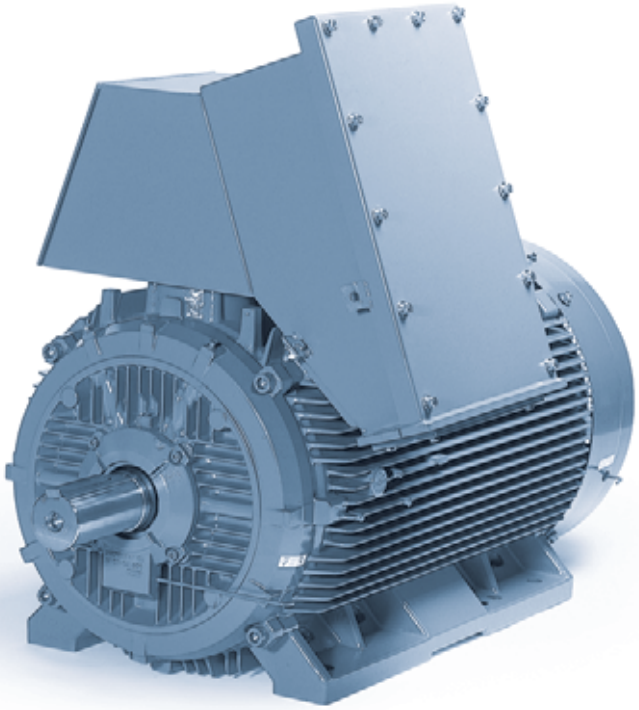

www.abb.com/motors&generators

> Motors

>> Motors and Generators for Hazardous Areas

Mechanical design.....200

Rating plates.....210

Ordering information.....211

Technical data.....212

Variant codes.....244

Dimension drawings.....246

Accessories.....249

Construction.....251

Cast iron motors in brief.....252

8

Mechanical design

This section describes standard high voltage motors for non-sparking and dust ignition protection, with limited optional features and accessories. In case you need an engineered cast iron motor, please contact your local ABB Sales office for further information.

Stator frame

The motor frames including feet and, bearing housing are made of cast iron. The terminal boxes are made of structural steel. Integrally cast feet allow a very rigid mounting and minimal vibration.

Motors can be supplied for foot mounting (horizontal), foot and flange mounting (horizontal) or flange mounting (vertical).

Protection against corrosion

Special attention has been paid to the finish of ABB's motors. All parts are treated by the method most appropriate to each material, giving reliable anti-corrosion protection under severe environmental conditions.

The color is blue, Munsel color code 8B, 4.5/3.25 (NCS4822-B05G the closest shade in other standards). Specific details of paint types are available on request.

Drain holes

Non-sparking and dust ignition proof category 3D high voltage motors are fitted with drain holes and closable plugs. The drain hole plugs are open on delivery and users must ensure that the drain holes face downward when mounting the motors.

For applications with a vertical mounting, the upper plug must be hammered home completely. In very dusty environments, both plugs should be hammered home.

By dust ignition proof category 2D high voltage motors drain holes are not included.

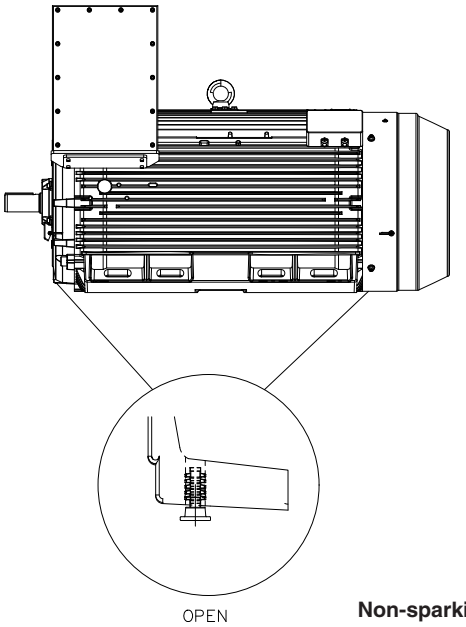

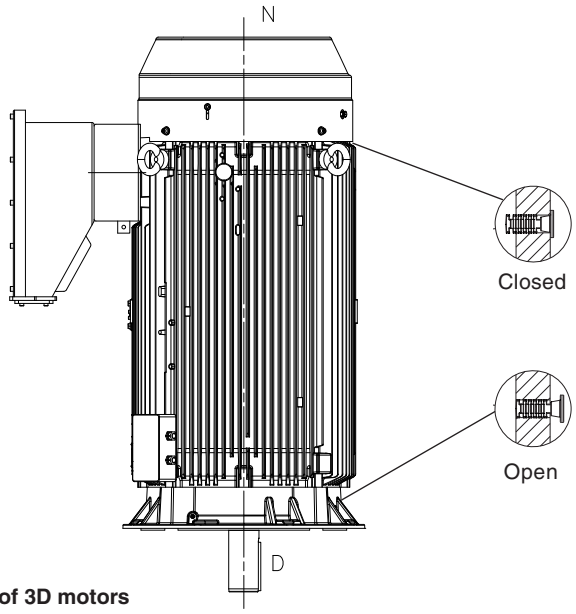

Non-sparking, dust ignition proof 3D motors
As standard with drain holes and closable plugs.

Dust ignition proof 2D motors
As standard without drain holes.

M000241

Terminal boxes

The high voltage terminal box is shown below. The main technical data are listed below.

Technical data:

Voltage (max.)	6.6 kV
Current (max.)	400 A
No of cables (max.)	1 per phase
Cross section of cables (max.)	300 mm^2/cable
Cable gland	blind gland plate (1 pcs)
Clearance (min.)	60 mm
Creepage (min.)	90 mm
Gross volume	47.3 dm^3
Usable volume	42.1 dm^3
Connection screws	M16 (3 pcs)
Connection nuts tightening torque	40 Nm
Ground connections	M12 (both in- and outside)
Weight	33 kg
Protection	IP 66
Standard	DIN 42962 TEIL 1, A2
Dynamic short circuit current	30 kA rms x 0.25s/ 75 kA peak

Materials:

Box	welded structural steel (thickness min. 3 mm)
Cable gland plate	steel
Connection screws	Bronze Bz
Isolators	epoxy casting resin or polyurethane resin
Grounding pad	stainless steel

Other features:

- rigid welded construction
- ample size for making connections of supply cables
- box turnable to allow cable entry from left or right side
- box turnable in steps of 90°
- either 3-phase or 1-phase cables can be connected
- pressure relief plate in the bottom of the box in case of an arching short circuit

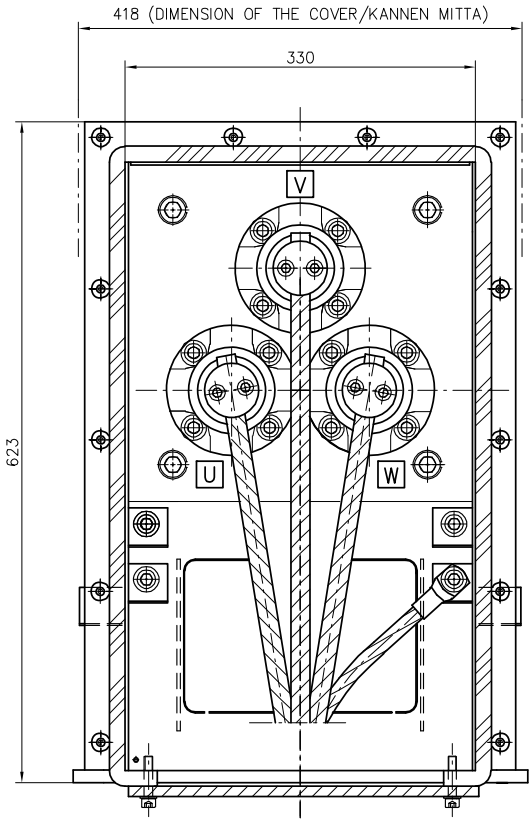

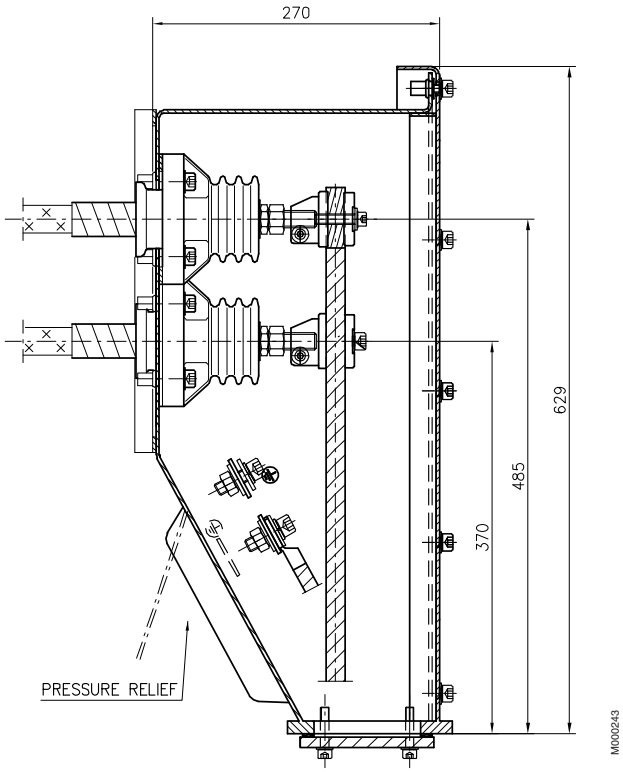

8

The high voltage star point terminal box is shown below (option, variant code 750). The main technical data are listed below.

Technical data:

Voltage (max.)	6.6 kV
Current (max.)	400 A
Cable gland	blind gland plate (1 pcs)
Creepage (min.)	90 mm
Gross volume	47.3 dm^3
Usable volume	42.1 dm^3
Connection screws	M16 (3 pcs)
Connection nuts tightening torque	40 Nm
Ground connections	M12 (both in- and outside)
Weight	33 kg
Protection	IP 66
Dynamic short circuit current	30kA rms x 0.25 s/ 75 kA peak

Materials:

Box	welded structural steel (thickness min. 3 mm)
Cable gland plate	steel
Connection screws	Bronze Bz
Connection bar	Copper Cu
Isolators	epoxy casting resin or polyurethane resin
Grounding pad	stainless steel

Other features:

- rigid welded construction
- box turnable to left or right side
- box turnable in steps of 90°
- pressure relief plate in the bottom of the box in case of an arching short circuit

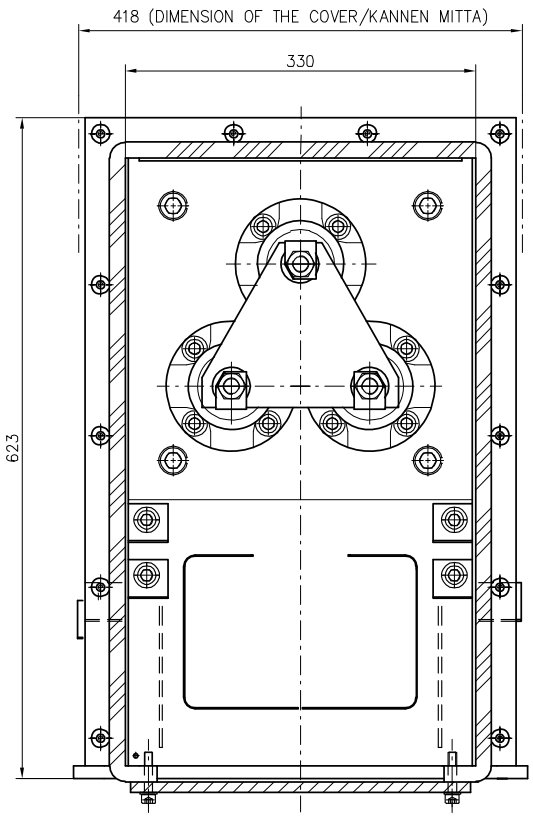

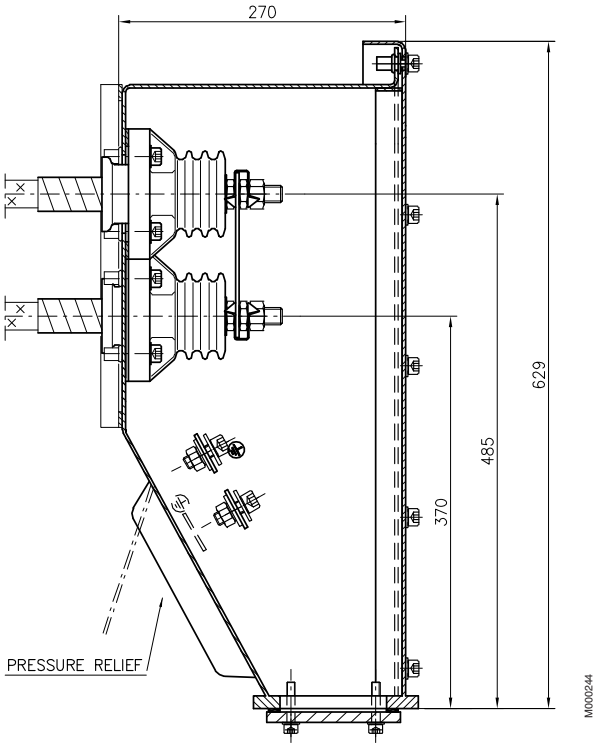

8

Star point terminal box (optional)

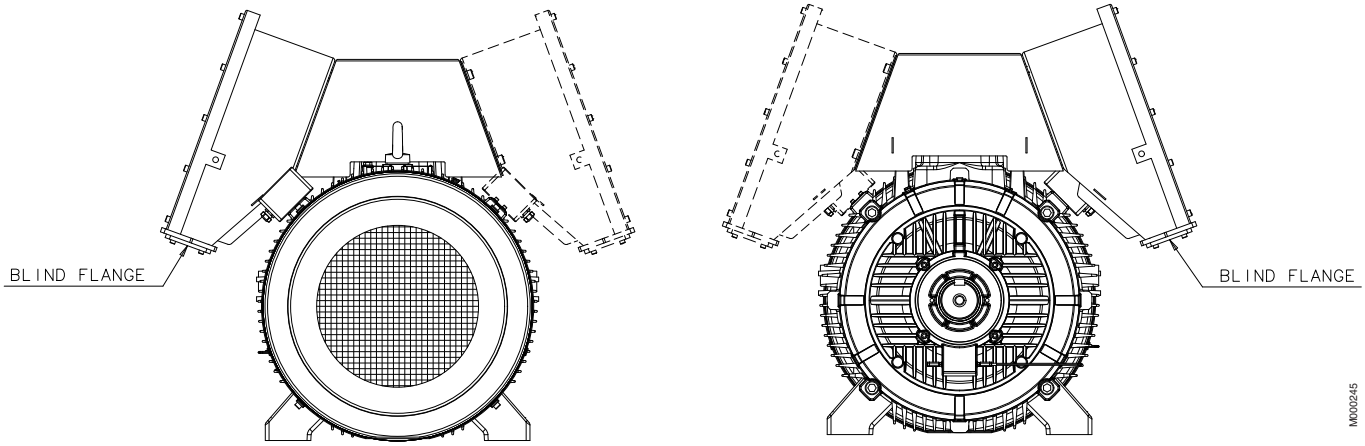

Delivery without main terminal box (optional)

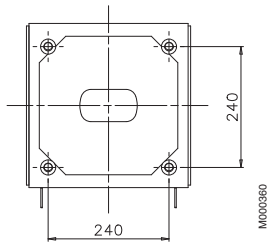

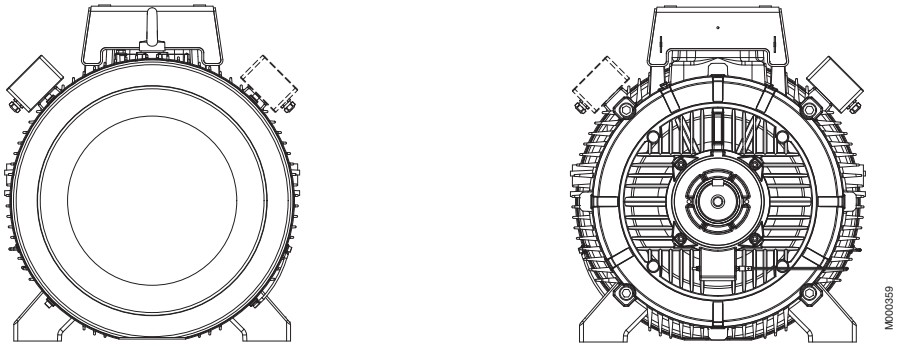

Dimensions for terminal box inlet, blind gland plate

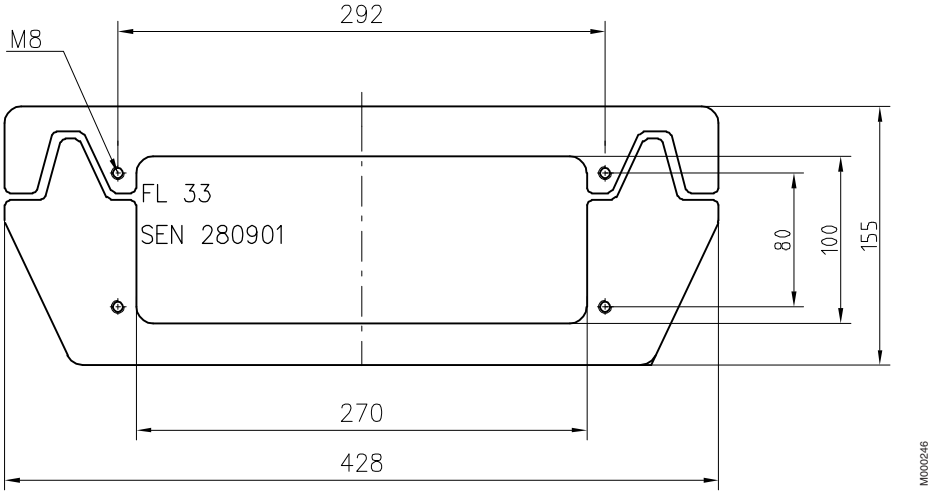

Auxiliary boxes

Auxiliary terminal box is used for control equipment and heating elements.

Specification:

- default one box
  - stator Pt-100
  - bearing Pt-100 (optional, variant code 107)
- separate box for heating elements

Specification:

Material designation	Al-Si10Mg (pressure die cast)
Material standard	EN 573-3
Surface treatment	RAL 7001 (grey)

Other features:

- equipped with assembly rail ARH 22 (DIN-35, 35x203 mm)
- main dimensions 125x222x81
- degree of protection IP 66 (IEC 529)
- gasket material polyurethane
- temperature resistance -55 - +80°C
- max. terminal blocks: 34 pcs 2.5 mm^2
  28 pcs 4.0 mm^2
- weight 1.6 kg

Accessory box

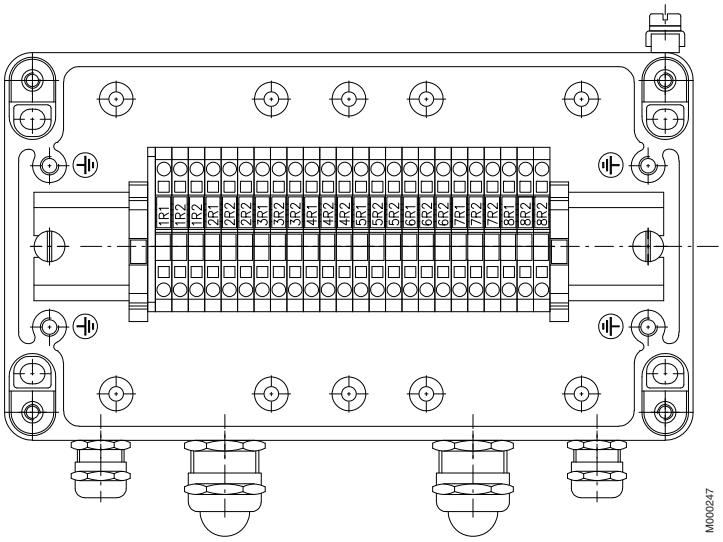

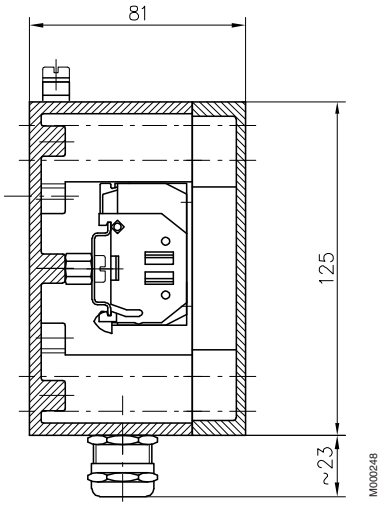

Accessory box for heating elements

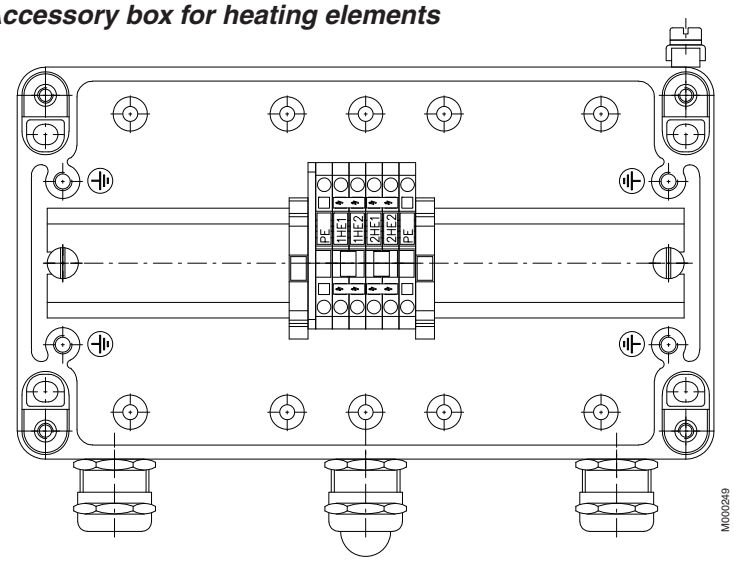

Bigger auxiliary box

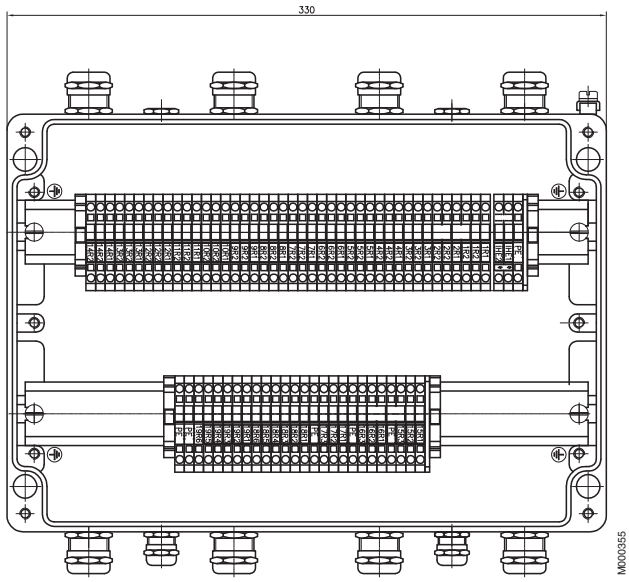

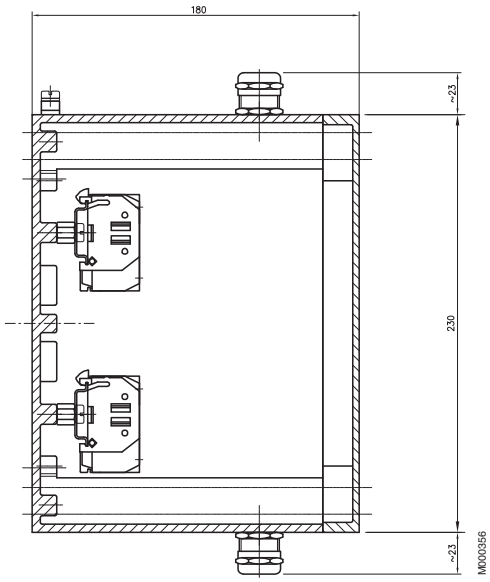

- one box as default
  - stator Pt-100 (6 pcs)
  - bearing Pt-100 (optional, variant code 107)
  - separate box for heating element (variant code 450/451)
  - dial type thermometers for bearings (optional, variant code 651/652)*
  - Pt-100 (12 pcs) inside stator slots (optional, variant code 653)*
  - Provision for vibration sensors (optional, variant code 654)*

  * The bigger auxiliary box is needed if any of these variant codes is selected.

Other features:
- equipped with assembly rail ARH 22 (DIN-35)
- main dimensions 230x330x180
- degree of protection IP66 (IEC 529)
- gasket material silicone
- temperature resistance -55 - +100°C
- weight 5.6 kg

Specification:

Material designation	Al-Si12Mg (die cast)
Material standard	EN 573-3
Surface treatment	RAL 7001 (grey)

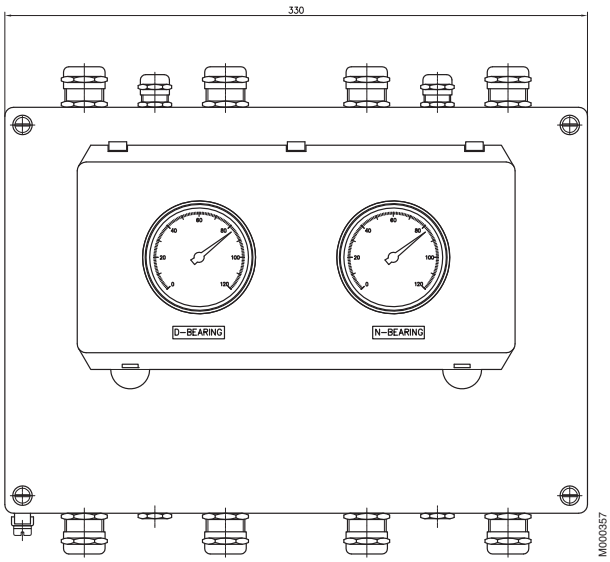

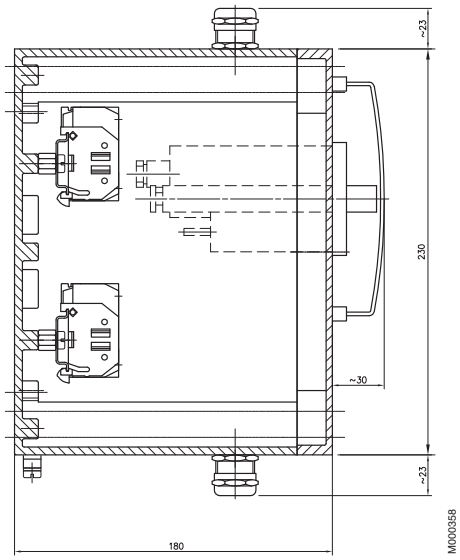

Option with bearing dial type thermometers
- Measuring range 0…120 °C
- Degree of protection: IP65 (IEC529)
- Temperature durability of display -40…+60 °C
- Ex i approved
- Temperature durability of capillary tube -40…+100 °C
- Without contacts (optional, variant codes 651)

Bearings

The motors are normally fitted with single-row deep groove ball bearings as listed in the table below.

If the bearing at the D-end is replaced with a roller bearing (NU-), higher radial forces can be handled. Roller bearings are suitable for belt drive applications.

Basic version with deep groove ball bearings

Motor size	Number of poles	Deep groove ball bearings	
		D-end	N-end
315	2	6316M/C3	6316M/C3
	4-6	6319/C3	6316/C3
355	2	6316M/C3	6316M/C3
	4-6	6322/C3	6316/C3
400	2	6317M/C3	6317M/C3
	4-8	6324/C3	6319/C3
450	2	6317M/C3	6317M/C3
	4-8	6326M/C3	6322/C3

Version with roller bearings, variant code 037

Motor size	Number of poles	Roller bearings, variant code 037
		D-end
315	4-6	NU 319/C3
355	4-6	NU 322/C3
400	4-8	NU 324/C3
450	4-8	NU 326/C3

Axially-locked bearings

All motors are equipped as standard with an axially-locked bearing at the D-end.

The bearing's outer ring is tightly locked between bearing's covers and tight fit of the housing fit.

The N-end bearing is axially free and can take the thermal expansion. Note! NU-bearing is axially locked at N-end.

Transport locking

Motors with roller bearings are fitted with a transport lock to prevent damage to the bearings during transport. All high voltage motors are fitted with a warning sign when the transport lock is fitted to prevent operational damage and alert operations.

Locking may also be fitted in other situations where the transport conditions are considered as potentially damaging.

Bearing seals

All high voltage motors are equipped with labyrinth sealed bearings.

Axially free (N-end)

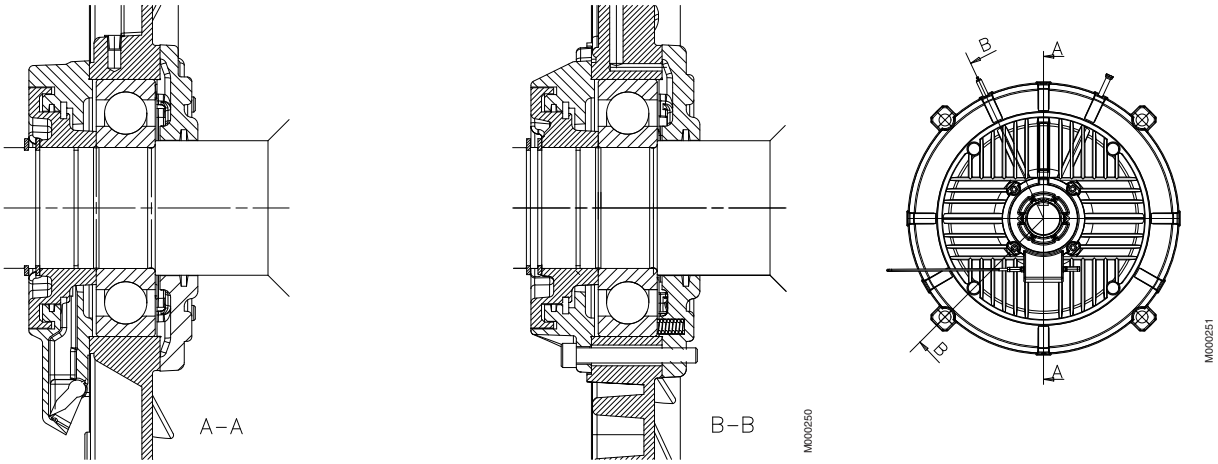

Axially locked (D-end)

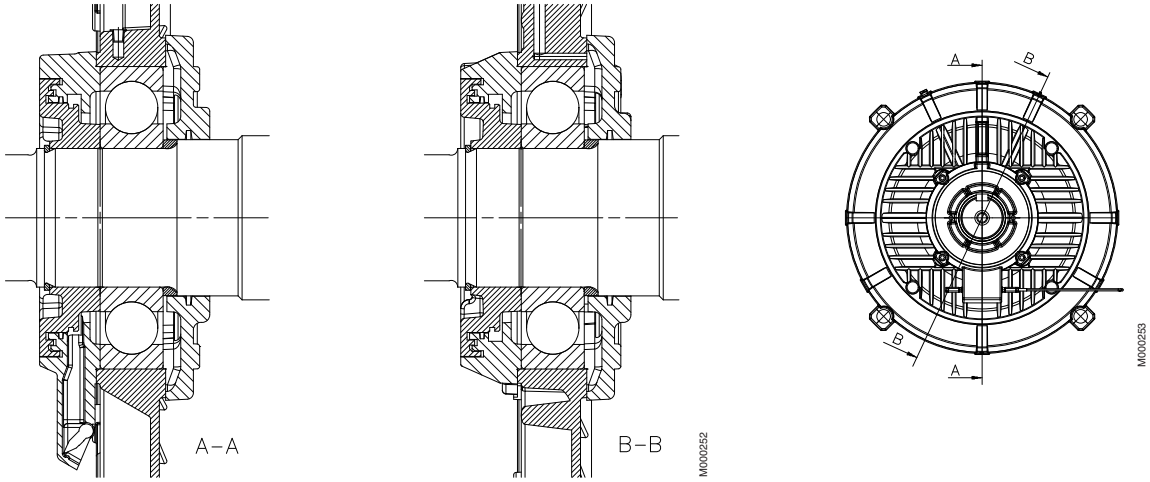

Vibration levels / Balancing

Motors are balanced according to ISO1940:1998 standard, balancing grade G2.5.

The following table lists the vibration values that the motors fulfil in compliance with IEC 60034-14.

Poles	Speed r/min	Design	Bearing housing vibration
2	1800 < n 3600	Standard	2.3 mm/s rms
≥ **4**	1800	Standard	2.3 mm/s rms

Bearing life

The nominal life L_{10} of a bearing is defined according to ISO 281 as the number of operating hours achieved or exceeded by 90% of identical bearings in a large test series under certain specified conditions. 50% of the bearings achieve at least five times this figure.

Lubrication

On delivery, the motors are pre-lubricated with high quality grease. The grease grade is stamped on the lubrication plate fastened to the motor frame. See page 152 for an example of a lubrication plate.

More information about lubrication and greases can be found in ABB's High Voltage Process Performance Manual delivered with the motor.

Motors with relubrication nipples

Motors are lubricated while running and the bearing system on all high voltage motors has been built so that a valve disc can be used for lubrication.

The grease outlet opening has closing valves at both ends that should be opened before greasing and closed 1-2 hours after regreasing. Closing the valves ensures that the construction is tight and dust or dirt cannot get inside the bearing.

Lubrication intervals

The lubrication interval is defined by following the L1-principle. This means that 99% of ABB's motors will achieve the normal service intervals. Values for the lubrication intervals can also be calculated according to the L10-principle, which are normally doubled compared to L1-values. Values are available from ABB on request.

The table below gives lubrication intervals for different speeds (according to the L1-principle). The values are valid for motors using the synthetic base oil mentioned in ABB's High Voltage Process Performance Motors Manual.

For more information, see ABB's High Voltage Process Performance Motors Manual.

Frame size	Ambient °C	3000 r/min	1500 r/min	<1000 r/min
Ball bearings, horizontal motor: lubrication intervals in duty hours				
315	25	5900	8800	8800
315	40 [1]	3000	6600	8800
355	25	4400	8800	8800
355	40 [1]	2200	5100	8800
400	25	3000	6600	8800
400	40 [1]	1500	3600	8000
450	25	3000	6600	8800
450	40 [1]	1500	3600	8000

[1] For generation code B motors, same lubrication intervals are valid for 50°C ambient.

Frame size	Ambient °C	3000 r/min	1500 r/min	<1000 r/min
Roller bearings: lubrication intervals in duty hours				
315	25	-	4400	8800
315	40 [1]	-	2200	5100
355	25	-	4400	4400
355	40 [1]	-	2200	2200
400	25	-	3000	4400
400	40 [1]	-	1500	2200
450	25	-	3000	4400
450	40 [1]	-	1500	2200

[1] For generation code B motors, same lubrication intervals are valid for 50°C ambient.

Frame size	Ambient °C	3000 r/min	1500 r/min	<1000 r/min
Ball bearings, vertical motor: lubrication intervals in duty hours				
315	25	-	6600	8800
315	40 [1]	-	3600	4400
355	25	-	4400	8800
355	40 [1]	-	2200	4400
400	25	-	3000	6600
400	40 [1]	-	1500	3600
450	25	-	3000	6600
450	40 [1]	-	1500	3600

[1] For generation code B motors, same lubrication intervals are valid for 50°C ambient.

Pulley diameter

When the desired bearing life has been determined, the minimum permissible pulley diameter can be calculated using F_R, as follows:

$$D = \frac{1.9 \cdot 10^7 \cdot K \cdot P}{n \cdot F_R}$$

where:

D = diameter of pulley, mm
P = power requirement, kW
n = motor speed, r/min
K = belt tension factor, dependent on belt type and type of duty. A common value for V-belts is 2.5.
F_R = permissible radial force

Permissible loadings on shaft

The tables give the maximum permissible radial force in Newtons, assuming zero axial force. The values are based on normal conditions at 50 Hz and calculated bearing lives L_{10h} for 40,000 hours.

Motors are foot-mounted IM 1001 (B3) version with force directed sideways. In some cases the strength of the shaft affects the permissible forces.

Permissible loads of simultaneous radial and axial forces will be supplied on request.

If the radial force is applied between points X_0 and X_{max}, the permissible force F_R can be calculated from the following formula:

$$F_R = F_{X0} - \frac{X}{E}(F_{X0} - F_{Xmax})$$

E = length of shaft extension in basic version

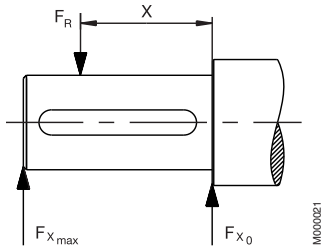

Permissible radial forces

Motor size	Poles	Length of shaft extension E (mm)	Ball bearings 40,000 hours F_{X0} (N)	Ball bearings FX_{max}(N)	Roller bearings 40,000 hours F_{X0} (N)	Roller bearings FX_{max}(N)
315LK	2	140	4850	4300	-	-
	4	170	7900	6850	25000	9500
	6	170	9050	7850	30000	9500
355LK	2	140	2350	2150	-	-
	4	210	9900	8600	25000	12000
	6	210	11500	9950	40000	12000
400L / LK	2	170	550	500	-	-
	4	210	8130	7160	25000	15000
	6-8	210	10190	8900	45000	15000
450L	2	170	-	-	-	-
	4	210	8950	7950	25000	20800
	6-8	210	10430	9250	50000	20800

Permissible axial forces

The following tables give the permissible axial forces in Newton, assuming zero radial force. The values are based on normal conditions at 50 Hz with standard bearings and calculated bearing lives L_{10h} 40,000 hours.

Given axial forces F_{AD}, assumes D-bearing locked by means of locking ring.

Mounting arrangement IM B3

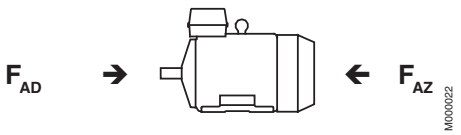

Motor size	40,000 hours 2-pole F_{AD} N	2-pole F_{AZ} N	4-pole F_{AD} N	4-pole F_{AZ} N	6-8-pole F_{AD} N	6-8-pole F_{AZ} N
315LK	2050	4050	4150	6150	5050	7050
355LK	850	4650	4350	8150	5650	9450
400L / LK	200	5200	2990	8990	3970	9970
450L	-	-	3200	9200	4220	10220

Mounting arrangement IM V1

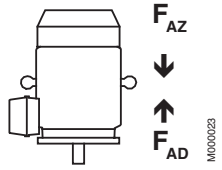

Motor size	40,000 hours 2-pole F_{AD} N	2-pole F_{AZ} N	4-pole F_{AD} N	4-pole F_{AZ} N	6-8-pole F_{AD} N	6-8-pole F_{AZ} N
315LK	-	-	7650	3750	9150	4350
355LK	-	-	10900	3850	12700	4600
400L / LK	-	-	11550	2780	15100	2480
450L	-	-	15420	800	19080	380

8

Rating plates

Rating plate

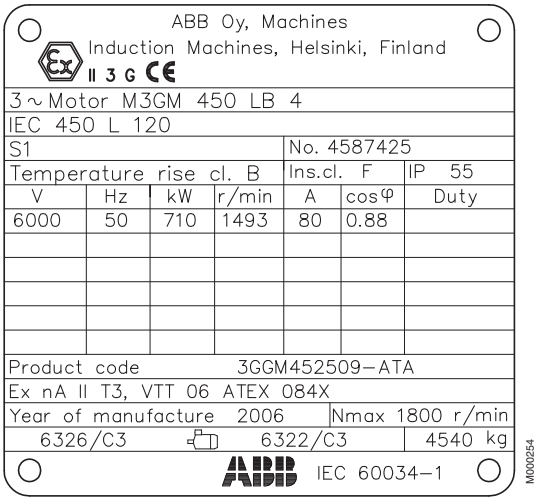

Lubrication plate

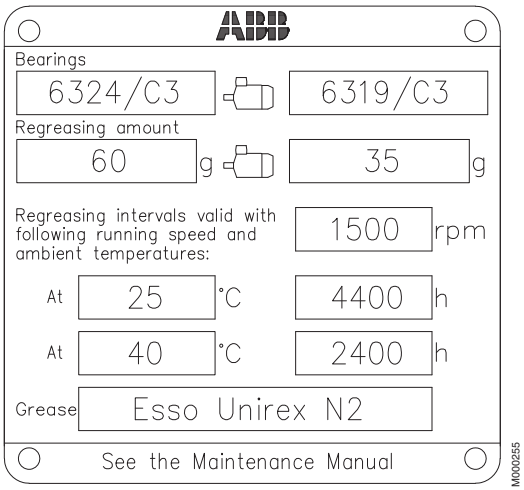

Restamping output, voltage, ambient and altitude

Motor catalogue ratings can be re-stamped as follows. Motor construction will not be changed but a new rating plate and data sheet can be created with variant code 002. In all the below cases or their combinations, please contact ABB for correct motor size and motor data. Bearing re-lubrication intervals as shown in this catalogue are valid also for re-stamped motors.

Output

Output can be re-stamped downwards from the catalogue data.

Voltage

Voltage can be re-stamped downwards up to 10% from the motor nominal voltage in the catalogue. Motor output has to be de-rated so that the motor absolute temperatures will not be higher compared to catalogue data.

Ambient temperature

Motor can be de-rated to higher ambient temperatures. Maximum ambient temperature is 55 °C. The output has to be de-rated so that absolute temperature will not be higher than the catalogue data.

Altitude

Motor can be de-rated to higher altitudes than standard 1000 meters above sea level. There are different maximum altitude limits for different motors depending on voltage level. The motor output has to be de-rated so that the absolute temperatures of the motor will not be higher than the catalogue data.

Note: M3GM (Ex) motors for higher than 1000 meters above sea level altitude can be offered only case by case from the manufacturing unit.

Ordering information

Sample order

When placing an order, please state the following minimum data in the order, as in example.

The product code of the motor is composed in accordance with the following example.

Motor type	M3GM 315LKA
Pole number	4
Mounting arrangement (IM code)	IM B3 (IM 1001)
Rated output	110 kW
Product code	3GGM312810-AQA
Variant codes if needed	

Motor size

A	B	C	D, E, F, G
M3GM	315LKA	3GGM 312 810 -	AQ A 003 etc.

1 2 3 4 5 6 7 8 9 10 11 12 13 14

A Motor type
B Motor size
C Product code
D Mounting arrangement code
E Voltage and frequency code
F Generation code
G Variant codes

Explanation of the product code:

Positions 1 to 4
3GGM = Totally enclosed fan cooled squirrel cage motor with cast iron frame, high voltage

Positions 5 and 6
IEC-frame
31 = 315
35 = 355
40 = 400
45 = 450

Position 7
Speed (Pole pairs)
1 = 2 poles
2 = 4 poles
3 = 6 poles
4 = 8 poles

Position 8 to 10
Serial number

Position 11
- (dash)

Position 12
Mounting arrangement
A = Horizontal
B = Vertical
H = Foot- and flange-mounted, terminal box top-mounted

Position 13
Voltage and frequency code
See table below

Position 14
Generation code
A, B, C...
A = Motor designed for 40°C ambient
B = Motor designed for 50°C ambient

The product code must be, if needed, followed by variant codes.

Code letters for supplementing the product code - single speed motors

Code letter for voltage and frequency at 50 Hz			
Q	**R**	**S**	**T**
3000 V	3300 V	6600 V	6000 V

8

HV Non-sparking motors Ex nA

Technical data for totally enclosed squirrel cage three phase cast iron motors

IP 55 - IC 411 - Insulation class F. temperature rise class B. ambient temperature 40°C

Output kW		Motor type			Product code	Speed r/min	Efficiency [4] Full load 100%	Efficiency 3/4 load 75%	Power factor Full load 100%	Power factor 3/4 load 75%	Current I_N A	I_S/I_N	I_0 A
3000 r/min = 2 poles						**3000 V**	**50 Hz**						
132		**M3GM**	**315 LKA**	3GGM	311 811-•QA	2971	94.2	94.2	0.92	0.92	29	6.2	5
155		**M3GM**	**315 LKB**	3GGM	311 821-•QA	2972	94.5	94.5	0.92	0.92	34	6.5	6
200	5)	**M3GM**	**355 LKA**	3GGM	351 811-•QA	2974	94.4	94.4	0.90	0.90	45	5.5	9
250	5)	**M3GM**	**355 LKB**	3GGM	351 821-•QA	2975	95.0	95.0	0.90	0.90	56	6.0	11
310	5)	**M3GM**	**355 LKC**	3GGM	351 831-•QA	2973	95.5	95.6	0.91	0.92	68	5.9	11
315	5)	**M3GM**	**355 LKD**	3GGM	351 842-•QA	2974	95.5	95.6	0.91	0.92	69	6.3	11
345	5)	**M3GM**	**355 LKE**	3GGM	351 851-•QA	2983	95.8	95.8	0.91	0.90	76	6.5	15
355	5)	**M3GM**	**400 LA**	3GGM	401 511-•QA	2980	95.6	95.6	0.90	0.90	79	6.2	16
400	5)	**M3GM**	**400 LB**	3GGM	401 521-•QA	2978	95.9	95.9	0.91	0.91	88	6.1	15
440	5)	**M3GM**	**400 LC**	3GGM	401 532-•QA	2979	96.0	96.1	0.91	0.92	96	6.5	16
500	5)	**M3GM**	**400 LKA**	3GGM	401 810-•QA	2983	96.3	96.4	0.91	0.91	109	6.1	19
555	5)	**M3GM**	**400 LKB**	3GGM	401 821-•QA	2983	96.5	96.6	0.91	0.92	121	6.1	19
3000 r/min = 2 poles						**3300 V**	**50 Hz**						
160		**M3GM**	**315 LKA**	3GGM	311 811-•RA	2976	94.6	94.6	0.91	0.91	32	6.3	6
200	5)	**M3GM**	**355 LKA**	3GGM	351 811-•RA	2977	94.5	94.3	0.89	0.89	41	6.1	9
250	5)	**M3GM**	**355 LKB**	3GGM	351 821-•RA	2975	95.0	95.0	0.90	0.90	51	6.0	10
310	5)	**M3GM**	**355 LKC**	3GGM	351 831-•RA	2975	95.5	95.6	0.91	0.92	62	6.4	11
330	5)	**M3GM**	**355 LKD**	3GGM	351 842-•RA	2975	95.7	95.8	0.91	0.92	66	6.5	11
355	5)	**M3GM**	**400 LA**	3GGM	401 511-•RA	2979	95.7	95.7	0.90	0.90	72	6.2	14
400	5)	**M3GM**	**400 LB**	3GGM	401 521-•RA	2978	95.8	95.9	0.91	0.91	80	6.1	14
435	5)	**M3GM**	**400 LC**	3GGM	401 532-•RA	2977	96.0	96.1	0.91	0.92	86	6.3	14
500	5)	**M3GM**	**400 LKA**	3GGM	401 810-•RA	2982	96.3	96.4	0.91	0.92	99	5.9	16
555	5)	**M3GM**	**400 LKB**	3GGM	401 821-•RA	2983	96.5	96.6	0.91	0.92	110	6.1	17
3000 r/min = 2 poles						**6000 V**	**50 Hz**						
250	5)	**M3GM**	**355 LKA**	3GGM	351 811-•TA	2975	94.9	95.0	0.91	0.92	28	6.1	5
280	5)	**M3GM**	**355 LKB**	3GGM	351 821-•TA	2982	95.3	95.3	0.91	0.90	31	6.2	6
300	5)	**M3GM**	**355 LKC**	3GGM	351 830-•TA	2982	95.5	95.5	0.91	0.91	33	6.2	6
315	5)	**M3GM**	**400 LA**	3GGM	401 511-•TA	2981	95.2	95.1	0.89	0.88	35	6.4	8
355	5)	**M3GM**	**400 LB**	3GGM	401 521-•TA	2979	95.6	95.6	0.91	0.91	39	6.3	7
390	5)	**M3GM**	**400 LC**	3GGM	401 532-•TA	2978	95.7	95.8	0.91	0.91	43	6.3	8
410	5)	**M3GM**	**400 LD**	3GGM	401 542-•TA	2979	95.9	96.0	0.92	0.92	45	6.6	8
450	5)	**M3GM**	**400 LKA**	3GGM	401 810-•TA	2983	96.0	96.1	0.91	0.91	49	6.0	9
500	5)	**M3GM**	**400 LKB**	3GGM	401 820-•TA	2984	96.2	96.3	0.91	0.91	55	6.4	10
530	5)	**M3GM**	**400 LKC**	3GGM	401 830-•TA	2984	96.3	96.4	0.92	0.92	58	6.4	10
3000 r/min = 2 poles						**6600 V**	**50 Hz**						
280	5)	**M3GM**	**355 LKA**	3GGM	351 811-•SA	2982	95.2	95.3	0.91	0.91	28	6.1	5
315	5)	**M3GM**	**400 LA**	3GGM	401 511-•SA	2980	95.3	95.2	0.90	0.89	32	6.4	7
355	5)	**M3GM**	**400 LB**	3GGM	401 521-•SA	2980	95.5	95.5	0.91	0.91	36	6.3	7
395	5)	**M3GM**	**400 LC**	3GGM	401 532-•SA	2979	95.8	95.8	0.91	0.91	39	6.5	7
415	5)	**M3GM**	**400 LD**	3GGM	401 542-•SA	2979	95.9	96.0	0.91	0.92	41	6.6	7
450	5)	**M3GM**	**400 LKA**	3GGM	401 810-•SA	2983	96.0	96.1	0.91	0.91	45	6.0	8
500	5)	**M3GM**	**400 LKB**	3GGM	401 820-•SA	2984	96.2	96.3	0.91	0.91	50	6.5	9
530	5)	**M3GM**	**400 LKC**	3GGM	401 830-•SA	2984	96.3	96.4	0.92	0.92	52	6.4	9

8

The bullet in the product code indicates choice of mounting arrangement (see ordering information page).

When ordering variant code for protection type has to be added to the product code according to needs:

456 Ex nA design, fulfilling IEC 60079-15, with certificate.
480 Ex nA II according to ATEX directive 94/9/EC, temperature class T3.

HV Non-sparking motors Ex nA

Technical data for totally enclosed squirrel cage three phase cast iron motors

IP 55 - IC 411 - Insulation class F. temperature rise class B. ambient temperature 40°C

Output kW		Motor type		Torque T_N Nm	T_S/T_N	T_{max}/T_N	Power factor cos ϕ_k	Load inertia [1] kgm²	Starting time cold [2] s	Maximum stalling time hot s	Rotor inertia kgm²	Rotor weight kg	Motor weight kg	Sound pressure level LP [3] dB(A)
3000 r/min = 2 poles							**3000 V**	**50 Hz**						
132		**M3GM**	**315 LKA**	424	1.2	2.6	0.17	10	8	16	2.0	230	1230	78
155		**M3GM**	**315 LKB**	498	1.3	2.8	0.17	12	7	16	2.1	240	1260	78
200	5)	**M3GM**	**355 LKA**	642	0.8	2.4	0.13	15	11	22	2.9	280	1680	78
250	5)	**M3GM**	**355 LKB**	803	0.9	2.6	0.13	18	9	16	3.2	300	1780	78
310	5)	**M3GM**	**355 LKC**	996	1.0	2.5	0.13	22	8	16	4.5	390	2150	78
315	5)	**M3GM**	**355 LKD**	1011	1.1	2.6	0.14	22	7	14	4.2	420	2240	78
345	5)	**M3GM**	**355 LKE**	1104	1.0	2.7	0.13	24	8	14	4.1	400	2220	78
355	5)	**M3GM**	**400 LA**	1138	0.9	2.6	0.13	24	9	20	6.9	460	2410	79
400	5)	**M3GM**	**400 LB**	1283	1.0	2.5	0.14	27	9	20	8.0	520	2660	79
440	5)	**M3GM**	**400 LC**	1411	1.1	2.6	0.14	29	7	16	7.8	580	2900	79
500	5)	**M3GM**	**400 LKA**	1601	0.8	2.6	0.11	32	9	16	8.8	560	2980	79
555	5)	**M3GM**	**400 LKB**	1777	0.8	2.6	0.11	35	9	14	8.4	620	3220	79
3000 r/min = 2 poles							**3300 V**	**50 Hz**						
160		**M3GM**	**315 LKA**	513	0.9	2.8	0.14	12	8	16	1.9	210	1180	78
200	5)	**M3GM**	**355 LKA**	641	0.8	2.7	0.13	15	10	20	2.9	280	1670	78
250	5)	**M3GM**	**355 LKB**	803	0.9	2.6	0.13	18	9	16	3.2	300	1770	78
310	5)	**M3GM**	**355 LKC**	995	1.1	2.7	0.14	22	7	15	4.5	390	2140	78
330	5)	**M3GM**	**355 LKD**	1059	1.1	2.7	0.13	23	7	13	4.2	420	2250	78
355	5)	**M3GM**	**400 LA**	1138	0.9	2.6	0.13	24	9	20	6.9	460	2430	79
400	5)	**M3GM**	**400 LB**	1283	1.0	2.5	0.13	27	9	20	8.0	520	2650	79
435	5)	**M3GM**	**400 LC**	1395	1.1	2.5	0.14	29	8	16	7.8	580	2900	79
500	5)	**M3GM**	**400 LKA**	1601	0.8	2.5	0.11	32	10	16	9.4	590	3090	79
555	5)	**M3GM**	**400 LKB**	1777	0.8	2.6	0.11	35	9	14	8.4	620	3210	79
3000 r/min = 2 poles							**6000 V**	**50 Hz**						
250	5)	**M3GM**	**355 LKA**	803	1.0	2.5	0.14	18	9	16	4.2	370	2010	78
280	5)	**M3GM**	**355 LKB**	897	0.9	2.6	0.13	20	9	18	4.1	350	2000	78
300	5)	**M3GM**	**355 LKC**	961	0.9	2.6	0.13	21	9	18	4.4	370	2090	78
315	5)	**M3GM**	**400 LA**	1009	0.9	2.7	0.14	22	9	20	6.4	430	2260	79
355	5)	**M3GM**	**400 LB**	1138	1.0	2.6	0.14	24	9	20	7.5	490	2510	79
390	5)	**M3GM**	**400 LC**	1250	1.0	2.6	0.14	26	8	17	6.7	520	2630	79
410	5)	**M3GM**	**400 LD**	1314	1.1	2.6	0.14	28	8	17	7.5	570	2810	79
450	5)	**M3GM**	**400 LKA**	1441	0.8	2.6	0.12	30	10	16	8.3	530	2820	79
500	5)	**M3GM**	**400 LKB**	1600	0.8	2.7	0.12	32	9	16	9.4	590	3050	79
530	5)	**M3GM**	**400 LKC**	1696	0.9	2.7	0.12	34	9	16	9.9	620	3170	79
3000 r/min = 2 poles							**6600 V**	**50 Hz**						
280	5)	**M3GM**	**355 LKA**	897	0.9	2.6	0.14	19	10	16	4.4	370	2080	78
315	5)	**M3GM**	**400 LA**	1009	1.0	2.7	0.14	22	9	20	6.4	430	2270	79
355	5)	**M3GM**	**400 LB**	1138	1.0	2.6	0.14	24	9	20	7.5	490	2500	79
395	5)	**M3GM**	**400 LC**	1266	1.1	2.6	0.14	27	8	16	6.7	520	2630	79
415	5)	**M3GM**	**400 LD**	1330	1.2	2.6	0.15	28	8	17	7.5	570	2810	79
450	5)	**M3GM**	**400 LKA**	1441	0.8	2.6	0.12	30	10	16	8.6	550	2880	79
500	5)	**M3GM**	**400 LKB**	1600	0.9	2.7	0.12	32	9	16	9.4	590	3050	79
530	5)	**M3GM**	**400 LKC**	1696	0.9	2.7	0.12	34	9	16	9.9	620	3170	79

8

[1] **315LK, 355LK, 400L:** The given values of load inertia assume two starts from cold and one start from warm conditions in succession against quadratic load torque with 90% of the rated torque at the rated speed and at 80% of the rated voltage.

400LK: The given values of load inertia assume two starts from cold and one start from warm conditions in succession against quadratic load torque with 85% of the rated torque at the rated speed and at 80% of the rated voltage.

To check validity against other starting requirements, contact ABB.

[2] **315LK, 355LK, 400L:** Starting time with given values of the load inertia from cold condition in succession against quadratic load torque with 90% of the rated torque at the rated speed and at rated voltage.

400LK: Starting time with given values of the load inertia from cold condition in succession against quadratic load torque with 85% of the rated torque at the rated speed and at rated voltage.

[3] The sound pressure levels are presented at no-load. The magnetic noise level of 2- and 4-pole motors is typically low compared to the fan noise, resulting no increase in the noise level on-load. The variation and measuring tolerance of the figures is +3 dB(A).

[4] Efficiency based on typical additional losses acc. to measurements.

[5] Unidirectional fan construction as standard. Direction of rotation must be stated when ordering, see variant codes 044 and 045.

HV Non-sparking motors Ex nA

Technical data for totally enclosed squirrel cage three phase cast iron motors

IP 55 - IC 411 - Insulation class F. temperature rise class B. ambient temperature 40°C

Output kW	Motor type			Product code	Speed r/min	Efficiency [4] Full load 100%	Efficiency 3/4 load 75%	Power factor Full load 100%	Power factor 3/4 load 75%	Current I_N A	I_S/I_N	I_0 A
1500 r/min = 4 poles					**3000 V**	**50 Hz**						
110	**M3GM**	**315 LKA**	3GGM	312 811-•QA	1488	94.3	94.1	0.84	0.80	27	6.2	10
132	**M3GM**	**315 LKB**	3GGM	312 821-•QA	1484	94.3	94.4	0.85	0.83	32	5.3	10
160	**M3GM**	**315 LKC**	3GGM	312 831-•QA	1485	94.6	94.6	0.87	0.85	37	6.2	11
200	**M3GM**	**315 LKD**	3GGM	312 841-•QA	1485	94.8	94.9	0.87	0.85	46	6.0	14
250	**M3GM**	**355 LKA**	3GGM	352 811-•QA	1490	95.3	95.2	0.84	0.80	60	6.2	22
315	**M3GM**	**355 LKB**	3GGM	352 821-•QA	1489	95.5	95.5	0.84	0.82	75	6.0	25
355	**M3GM**	**355 LKC**	3GGM	352 831-•QA	1488	95.7	95.8	0.85	0.82	84	6.0	27
400	**M3GM**	**355 LKD**	3GGM	352 841-•QA	1489	96.0	96.0	0.86	0.84	93	5.8	29
450	**M3GM**	**400 LA**	3GGM	402 511-•QA	1490	96.4	96.5	0.86	0.84	105	6.4	32
490	**M3GM**	**400 LB**	3GGM	402 521-•QA	1489	96.1	96.1	0.85	0.83	115	6.4	35
560	**M3GM**	**400 LKA**	3GGM	402 810-•QA	1491	96.4	96.4	0.85	0.83	131	6.0	43
600	**M3GM**	**400 LKB**	3GGM	402 820-•QA	1491	96.5	96.4	0.85	0.82	140	6.4	48
710	**M3GM**	**450 LA**	3GGM	452 510-•QA	1493	96.6	96.6	0.88	0.86	161	6.4	44
735	**M3GM**	**450 LB**	3GGM	452 521-•QA	1492	96.6	96.6	0.88	0.86	166	6.2	44
1500 r/min = 4 poles					**3300 V**	**50 Hz**						
132	**M3GM**	**315 LKA**	3GGM	312 811-•RA	1488	94.5	94.3	0.82	0.77	30	6.2	13
160	**M3GM**	**315 LKB**	3GGM	312 821-•RA	1484	94.7	94.8	0.84	0.82	35	5.5	12
200	**M3GM**	**315 LKC**	3GGM	312 831-•RA	1485	94.8	94.9	0.87	0.85	42	6.1	13
250	**M3GM**	**355 LKA**	3GGM	352 811-•RA	1489	95.3	95.2	0.84	0.81	55	6.0	19
315	**M3GM**	**355 LKB**	3GGM	352 821-•RA	1490	95.4	95.4	0.83	0.80	69	6.4	26
355	**M3GM**	**355 LKC**	3GGM	352 831-•RA	1489	95.7	95.7	0.84	0.81	77	6.4	27
400	**M3GM**	**355 LKD**	3GGM	352 841-•RA	1490	95.9	95.9	0.86	0.83	85	6.0	28
440	**M3GM**	**400 LA**	3GGM	402 511-•RA	1489	96.4	96.4	0.85	0.84	93	6.2	28
495	**M3GM**	**400 LB**	3GGM	402 521-•RA	1490	96.1	96.1	0.85	0.83	106	6.5	34
560	**M3GM**	**400 LKA**	3GGM	402 810-•RA	1491	96.4	96.4	0.85	0.83	119	6.0	39
600	**M3GM**	**400 LKB**	3GGM	402 820-•RA	1491	96.5	96.4	0.85	0.83	127	6.3	43
630	**M3GM**	**450 LA**	3GGM	452 510-•RA	1493	96.5	96.4	0.88	0.86	130	6.3	36
710	**M3GM**	**450 LB**	3GGM	452 520-•RA	1492	96.6	96.6	0.88	0.86	146	6.3	39
1500 r/min = 4 poles					**6000 V**	**50 Hz**						
250	**M3GM**	**355 LKA**	3GGM	352 811-•TA	1486	95.2	95.3	0.84	0.81	30	5.8	10
315	**M3GM**	**355 LKB**	3GGM	352 821-•TA	1489	95.7	95.7	0.83	0.79	38	6.4	15
355	**M3GM**	**400 LA**	3GGM	402 511-•TA	1489	95.9	96.0	0.85	0.84	42	6.2	13
400	**M3GM**	**400 LB**	3GGM	402 521-•TA	1489	96.1	96.2	0.86	0.84	47	6.4	14
450	**M3GM**	**400 LC**	3GGM	402 531-•TA	1489	95.9	96.0	0.86	0.85	52	6.3	15
500	**M3GM**	**400 LKA**	3GGM	402 810-•TA	1491	96.2	96.2	0.85	0.83	58	5.9	19
560	**M3GM**	**400 LKB**	3GGM	402 820-•TA	1491	96.3	96.3	0.86	0.84	65	5.9	20
600	**M3GM**	**400 LKC**	3GGM	402 830-•TA	1492	96.4	96.4	0.85	0.82	70	6.4	24
630	**M3GM**	**450 LA**	3GGM	452 510-•TA	1493	96.4	96.4	0.87	0.85	72	6.5	21
710	**M3GM**	**450 LB**	3GGM	452 520-•TA	1493	96.6	96.5	0.88	0.86	80	6.4	22
1500 r/min = 4 poles					**6600 V**	**50 Hz**						
250	**M3GM**	**355 LKA**	3GGM	352 811-•SA	1488	95.3	95.3	0.83	0.80	28	6.2	11
315	**M3GM**	**355 LKB**	3GGM	352 821-•SA	1487	95.6	95.7	0.84	0.81	34	6.3	12
355	**M3GM**	**400 LA**	3GGM	402 511-•SA	1489	95.9	96.0	0.86	0.84	38	6.1	11
400	**M3GM**	**400 LB**	3GGM	402 521-•SA	1489	96.0	96.1	0.86	0.84	42	6.3	13
450	**M3GM**	**400 LC**	3GGM	402 531-•SA	1489	96.0	95.9	0.86	0.84	48	6.5	14
500	**M3GM**	**400 LKA**	3GGM	402 810-•SA	1491	96.2	96.1	0.85	0.83	53	6.0	18
560	**M3GM**	**400 LKB**	3GGM	402 820-•SA	1491	96.3	96.3	0.86	0.84	59	5.9	18
600	**M3GM**	**400 LKC**	3GGM	402 830-•SA	1491	96.4	96.4	0.85	0.83	64	6.3	21
630	**M3GM**	**450 LA**	3GGM	452 510-•SA	1493	96.4	96.3	0.87	0.85	65	6.5	19
710	**M3GM**	**450 LB**	3GGM	452 520-•SA	1492	96.6	96.5	0.88	0.86	73	6.3	20

The bullet in the product code indicates choice of mounting arrangement (see ordering information page).

When ordering variant code for protection type has to be added to the product code according to needs:

456 Ex nA design, fulfilling IEC 60079-15, with certificate.
480 Ex nA II according to ATEX directive 94/9/EC, temperature class T3.

HV Non-sparking motors Ex nA

Technical data for totally enclosed squirrel cage three phase cast iron motors

IP 55 - IC 411 - Insulation class F. temperature rise class B. ambient temperature 40°C

Output kW	Motor type		Torque T_N Nm	T_S / T_N	T_{max} / T_N	Power factor cos ϕ_k	Load inertia [1] kgm²	Starting time cold [2] s	Maximum stalling time hot s	Rotor inertia kgm²	Rotor weight kg	Motor weight kg	Sound pressure level LP [3] dB(A)
1500 r/min = 4 poles						**3000 V**	**50 Hz**						
110	**M3GM**	**315 LKA**	706	1.6	2.6	0.21	41	7	20	1.9	220	1180	73
132	**M3GM**	**315 LKB**	849	1.3	2.1	0.21	49	9	20	1.9	220	1180	73
160	**M3GM**	**315 LKC**	1029	1.6	2.4	0.21	58	7	16	2.8	260	1180	73
200	**M3GM**	**315 LKD**	1286	1.0	2.7	0.15	71	8	15	2.9	270	1210	73
250	**M3GM**	**355 LKA**	1603	1.3	2.5	0.17	87	8	18	5.5	400	1850	74
315	**M3GM**	**355 LKB**	2021	1.3	2.4	0.17	107	8	16	6.3	450	1980	74
355	**M3GM**	**355 LKC**	2278	1.4	2.3	0.17	119	8	14	6.8	480	2080	74
400	**M3GM**	**355 LKD**	2565	0.9	2.4	0.13	132	9	16	8.1	540	2260	74
450	**M3GM**	**400 LA**	2885	1.5	2.3	0.16	147	7	12	12.1	660	2870	74
490	**M3GM**	**400 LB**	3141	1.5	2.3	0.16	158	7	12	12.1	660	2860	79
560	**M3GM**	**400 LKA**	3587	1.0	2.5	0.12	177	9	14	13.7	730	3200	79
600	**M3GM**	**400 LKB**	3842	1.1	2.7	0.12	188	8	12	14.9	790	3380	79
710	**M3GM**	**450 LA**	4542	0.8	2.6	0.10	217	10	20	25.6	1050	4570	83
735	**M3GM**	**450 LB**	4704	0.8	2.5	0.10	224	11	22	22.9	1060	4580	83
1500 r/min = 4 poles						**3300 V**	**50 Hz**						
132	**M3GM**	**315 LKA**	847	1.7	2.6	0.21	49	7	20	1.9	220	1180	73
160	**M3GM**	**315 LKB**	1029	1.4	2.2	0.21	58	8	20	2.1	240	1250	73
200	**M3GM**	**315 LKC**	1286	1.0	2.7	0.15	71	8	15	2.9	270	1210	73
250	**M3GM**	**355 LKA**	1603	1.3	2.4	0.17	87	8	20	5.5	400	1850	74
315	**M3GM**	**355 LKB**	2019	1.4	2.5	0.17	107	7	16	6.3	450	1970	74
355	**M3GM**	**355 LKC**	2277	1.4	2.5	0.17	119	7	14	6.8	480	2070	74
400	**M3GM**	**355 LKD**	2564	1.0	2.5	0.13	132	9	16	8.1	540	2250	74
440	**M3GM**	**400 LA**	2822	1.4	2.3	0.16	144	7	12	11.3	620	2770	74
495	**M3GM**	**400 LB**	3173	1.5	2.4	0.16	159	7	11	12.1	660	2860	79
560	**M3GM**	**400 LKA**	3587	1.0	2.5	0.12	177	9	14	13.7	730	3200	79
600	**M3GM**	**400 LKB**	3842	1.0	2.6	0.12	188	8	12	14.9	790	3370	79
630	**M3GM**	**450 LA**	4031	0.8	2.5	0.10	196	11	20	23.5	980	4340	83
710	**M3GM**	**450 LB**	4543	0.8	2.5	0.10	217	11	20	25.6	1050	4570	83
1500 r/min = 4 poles						**6000 V**	**50 Hz**						
250	**M3GM**	**355 LKA**	1606	1.2	2.3	0.17	87	8	20	4.1	380	2010	74
315	**M3GM**	**355 LKB**	2021	1.1	2.7	0.14	107	8	20	4.8	420	2200	74
355	**M3GM**	**400 LA**	2277	1.4	2.3	0.17	119	7	17	10.8	600	2600	74
400	**M3GM**	**400 LB**	2565	1.5	2.4	0.17	132	7	14	11.6	640	2730	74
450	**M3GM**	**400 LC**	2887	1.5	2.3	0.17	147	7	12	12.4	670	2840	79
500	**M3GM**	**400 LKA**	3203	1.0	2.5	0.13	161	9	16	12.9	700	3050	79
560	**M3GM**	**400 LKB**	3588	1.0	2.5	0.13	177	9	14	14.1	750	3220	79
600	**M3GM**	**400 LKC**	3841	1.1	2.7	0.12	188	8	12	14.9	790	3340	79
630	**M3GM**	**450 LA**	4030	0.8	2.6	0.10	196	10	20	22.8	960	4240	83
710	**M3GM**	**450 LB**	4543	0.8	2.6	0.10	217	10	20	25.6	1050	4540	83
1500 r/min = 4 poles						**6600 V**	**50 Hz**						
250	**M3GM**	**355 LKA**	1605	1.4	2.5	0.17	87	7	20	4.1	380	2010	74
315	**M3GM**	**355 LKB**	2023	1.4	2.5	0.17	107	7	20	5.0	440	2280	74
355	**M3GM**	**400 LA**	2277	1.4	2.3	0.17	119	7	17	10.8	600	2600	74
400	**M3GM**	**400 LB**	2566	1.5	2.3	0.17	132	7	14	11.6	640	2710	74
450	**M3GM**	**400 LC**	2886	1.6	2.4	0.17	147	6	12	12.4	670	2840	79
500	**M3GM**	**400 LKA**	3202	1.0	2.6	0.13	161	9	15	12.9	700	3040	79
560	**M3GM**	**400 LKB**	3588	1.0	2.5	0.13	177	9	14	14.1	750	3220	79
600	**M3GM**	**400 LKC**	3842	1.0	2.6	0.13	188	8	12	14.9	790	3330	79
630	**M3GM**	**450 LA**	4030	0.8	2.6	0.10	196	10	20	22.8	960	4230	83
710	**M3GM**	**450 LB**	4543	0.8	2.4	0.10	217	11	20	25.6	1050	4530	83

[1] The given values of load inertia assume three starts from cold and two starts from warm conditions in succession against quadratic load torque with 90% of the rated torque at the rated speed and at 80% of the rated voltage.
To check validity against other starting requirements, contact ABB.

[2] Starting time with given values of the load inertia from cold condition in succession against quadratic load torque with 90% of the rated torque at the rated speed and at rated voltage.

[3] The sound pressure levels are presented at no-load. The magnetic noise level of 2- and 4-pole motors is typically low compared to the fan noise, resulting no increase in the noise level on-load. The variation and measuring tolerance of the figures is +3 dB(A).

[4] Efficiency based on typical additional losses acc. to measurements.

8

HV Non-sparking motors Ex nA

Technical data for totally enclosed squirrel cage three phase cast iron motors

IP 55 - IC 411 - Insulation class F. temperature rise class B. ambient temperature 40°C

Output kW	Motor type			Product code	Speed r/min	Efficiency [4] Full load 100%	Efficiency [4] 3/4 load 75%	Power factor Full load 100%	Power factor 3/4 load 75%	Current I_N A	Current I_S/I_N	Current I_0 A
1000 r/min = 6 poles					**3000 V**	**50 Hz**						
110	**M3GM**	**315 LKA**	3GGM	313 811-•QA	987	93.9	94.3	0.80	0.77	28	5.3	11
132	**M3GM**	**315 LKB**	3GGM	313 821-•QA	986	94.3	94.6	0.80	0.77	33	5.4	13
150	**M3GM**	**315 LKC**	3GGM	313 831-•QA	991	94.8	94.8	0.76	0.69	40	6.2	21
160	**M3GM**	**355 LKA**	3GGM	353 811-•QA	992	94.9	94.9	0.75	0.70	43	5.5	21
200	**M3GM**	**355 LKB**	3GGM	353 821-•QA	990	95.3	95.4	0.79	0.75	51	5.3	21
250	**M3GM**	**355 LKC**	3GGM	353 831-•QA	991	95.6	95.7	0.79	0.75	64	5.5	27
315	**M3GM**	**400 L**	3GGM	403 501-•QA	991	95.7	95.9	0.82	0.79	77	6.0	28
355	**M3GM**	**400 LA**	3GGM	403 511-•QA	991	95.9	96.1	0.82	0.80	86	5.9	30
400	**M3GM**	**400 LB**	3GGM	403 521-•QA	991	96.1	96.3	0.82	0.80	97	6.2	34
450	**M3GM**	**400 LKA**	3GGM	403 811-•QA	994	96.2	96.2	0.79	0.75	113	6.0	48
500	**M3GM**	**400 LKB**	3GGM	403 821-•QA	994	96.3	96.4	0.81	0.77	123	5.8	48
520	**M3GM**	**400 LKC**	3GGM	403 831-•QA	995	96.4	96.3	0.78	0.73	133	6.6	62
560	**M3GM**	**450 LA**	3GGM	453 510-•QA	994	96.4	96.5	0.84	0.81	133	5.9	46
630	**M3GM**	**450 LB**	3GGM	453 520-•QA	994	96.6	96.6	0.84	0.81	149	6.3	52
695	**M3GM**	**450 LC**	3GGM	453 531-•QA	995	96.7	96.7	0.84	0.81	164	6.6	60
1000 r/min = 6 poles					**3300 V**	**50 Hz**						
112	**M3GM**	**315 LKA**	3GGM	313 811-•RA	991	94.4	94.5	0.79	0.74	26	5.7	12
132	**M3GM**	**315 LKB**	3GGM	313 821-•RA	987	94.3	94.6	0.80	0.76	31	5.6	13
150	**M3GM**	**315 LKC**	3GGM	313 831-•RA	991	94.8	94.8	0.76	0.69	36	6.2	19
160	**M3GM**	**355 LKA**	3GGM	353 811-•RA	992	94.9	94.8	0.75	0.69	39	5.7	20
200	**M3GM**	**355 LKB**	3GGM	353 821-•RA	990	95.3	95.4	0.79	0.75	46	5.3	19
250	**M3GM**	**355 LKC**	3GGM	353 831-•RA	990	95.5	95.7	0.80	0.76	57	5.3	23
310	**M3GM**	**400 L**	3GGM	403 502-•RA	990	95.7	95.9	0.82	0.79	69	5.8	24
345	**M3GM**	**400 LA**	3GGM	403 512-•RA	991	95.9	96.0	0.82	0.79	77	6.2	27
390	**M3GM**	**400 LB**	3GGM	403 521-•RA	991	96.0	96.2	0.82	0.80	86	6.2	30
450	**M3GM**	**400 LKA**	3GGM	403 811-•RA	994	96.2	96.3	0.80	0.76	102	5.9	41
490	**M3GM**	**400 LKB**	3GGM	403 821-•RA	994	96.3	96.3	0.81	0.77	110	5.9	44
530	**M3GM**	**400 LKC**	3GGM	403 831-•RA	994	96.4	96.4	0.79	0.74	122	6.4	54
560	**M3GM**	**450 LA**	3GGM	453 510-•RA	994	96.4	96.5	0.84	0.82	120	6.0	41
630	**M3GM**	**450 LB**	3GGM	453 520-•RA	995	96.6	96.6	0.84	0.81	135	6.4	48
695	**M3GM**	**450 LC**	3GGM	453 531-•RA	995	96.7	96.7	0.84	0.81	150	6.6	54
1000 r/min = 6 poles					**6000 V**	**50 Hz**						
220	**M3GM**	**355 LKA**	3GGM	353 811-•TA	992	95.2	95.3	0.80	0.76	28	6.3	12
250	**M3GM**	**355 LKB**	3GGM	353 821-•TA	992	95.3	95.5	0.81	0.78	31	5.7	12
280	**M3GM**	**400 L**	3GGM	403 501-•TA	991	95.7	95.8	0.80	0.76	35	5.6	14
315	**M3GM**	**400 LA**	3GGM	403 511-•TA	992	95.9	95.9	0.80	0.76	40	5.8	16
350	**M3GM**	**400 LB**	3GGM	403 521-•TA	991	96.0	96.1	0.80	0.77	44	5.7	17
400	**M3GM**	**400 LKA**	3GGM	403 811-•TA	993	96.1	96.1	0.81	0.77	50	5.5	19
450	**M3GM**	**400 LKC**	3GGM	403 831-•TA	993	96.3	96.2	0.80	0.76	56	6.0	23
500	**M3GM**	**450 LA**	3GGM	453 510-•TA	995	96.3	96.3	0.83	0.80	60	6.3	22
560	**M3GM**	**450 LB**	3GGM	453 520-•TA	995	96.4	96.5	0.84	0.81	66	6.3	23
630	**M3GM**	**450 LC**	3GGM	453 530-•TA	994	96.5	96.6	0.84	0.81	75	6.3	26
650	**M3GM**	**450 LD**	3GGM	453 540-•TA	994	96.6	96.6	0.85	0.82	76	6.4	26
1000 r/min = 6 poles					**6600 V**	**50 Hz**						
250	**M3GM**	**355 LKA**	3GGM	353 811-•SA	994	95.5	95.5	0.79	0.74	29	6.5	13
280	**M3GM**	**400 L**	3GGM	403 501-•SA	991	95.6	95.7	0.79	0.75	32	5.6	13
315	**M3GM**	**400 LA**	3GGM	403 511-•SA	992	95.9	95.9	0.79	0.75	36	6.1	16
355	**M3GM**	**400 LB**	3GGM	403 521-•SA	991	96.0	96.0	0.80	0.76	40	5.8	16
400	**M3GM**	**400 LKA**	3GGM	403 811-•SA	993	96.1	96.1	0.80	0.77	45	5.7	18
450	**M3GM**	**400 LKC**	3GGM	403 831-•SA	993	96.2	96.2	0.80	0.76	51	6.0	21
500	**M3GM**	**450 LA**	3GGM	453 510-•SA	994	96.3	96.3	0.84	0.82	54	6.0	18
560	**M3GM**	**450 LB**	3GGM	453 520-•SA	994	96.4	96.5	0.85	0.82	60	6.1	20
630	**M3GM**	**450 LC**	3GGM	453 530-•SA	994	96.5	96.6	0.85	0.83	67	6.1	22

The bullet in the product code indicates choice of mounting arrangement (see ordering information page).

When ordering variant code for protection type has to be added to the product code according to needs:

456 Ex nA design, fulfilling IEC 60079-15, with certificate.
480 Ex nA II according to ATEX directive 94/9/EC, temperature class T3.

HV Non-sparking motors Ex nA

Technical data for totally enclosed squirrel cage three phase cast iron motors

IP 55 - IC 411 - Insulation class F. temperature rise class B. ambient temperature 40°C

Output kW	Motor type		Torque T_N Nm	T_S / T_N	T_{max} / T_N	Power factor cos ϕ_k	Load inertia [1] kgm²	Starting time cold [2] s	Maximum stalling time hot s	Rotor inertia kgm²	Rotor weight kg	Motor weight kg	Sound pressure level LP [3] dB(A)
1000 r/min = 6 poles						**3000 V 50 Hz**							
110	**M3GM**	**315 LKA**	1065	1.5	2.2	0.23	111	9	20	2.8	270	1170	65
132	**M3GM**	**315 LKB**	1278	1.6	2.3	0.22	131	8	20	3.2	290	1240	65
150	**M3GM**	**315 LKC**	1445	1.4	2.9	0.17	148	8	16	3.3	300	1270	65
160	**M3GM**	**355 LKA**	1541	1.4	2.4	0.19	157	9	20	4.6	350	1660	70
200	**M3GM**	**355 LKB**	1928	1.4	2.2	0.19	192	9	20	5.7	410	1850	70
250	**M3GM**	**355 LKC**	2410	1.5	2.2	0.19	236	8	20	6.9	480	2030	70
315	**M3GM**	**400 L**	3036	1.6	2.2	0.18	291	8	18	14.6	670	2500	75
355	**M3GM**	**400 LA**	3422	1.6	2.2	0.18	324	8	18	17.4	770	2730	75
400	**M3GM**	**400 LB**	3854	1.7	2.3	0.18	360	7	18	20.1	870	2970	75
450	**M3GM**	**400 LKA**	4323	1.2	2.5	0.14	400	9	22	17.9	870	3090	78
500	**M3GM**	**400 LKB**	4806	1.2	2.4	0.13	439	9	22	20.5	960	3330	78
520	**M3GM**	**400 LKC**	4993	1.4	2.7	0.13	455	7	21	21.1	980	3380	78
560	**M3GM**	**450 LA**	5379	1.1	2.5	0.14	486	10	20	29.2	1040	3990	78
630	**M3GM**	**450 LB**	6049	1.2	2.6	0.14	539	9	20	34.5	1190	4360	78
695	**M3GM**	**450 LC**	6673	1.3	2.6	0.14	587	8	22	34.0	1250	4510	78
1000 r/min = 6 poles						**3300 V 50 Hz**							
112	**M3GM**	**315 LKA**	1080	1.2	2.6	0.18	113	9	20	3.0	280	1200	65
132	**M3GM**	**315 LKB**	1277	1.6	2.3	0.22	131	8	20	3.2	290	1240	65
150	**M3GM**	**315 LKC**	1445	1.4	2.9	0.17	148	8	16	3.3	300	1270	65
160	**M3GM**	**355 LKA**	1540	1.5	2.4	0.19	157	8	20	4.6	350	1660	70
200	**M3GM**	**355 LKB**	1928	1.4	2.2	0.19	192	9	20	5.7	410	1850	70
250	**M3GM**	**355 LKC**	2412	1.4	2.1	0.19	236	9	20	6.9	480	2030	70
310	**M3GM**	**400 L**	2989	1.5	2.2	0.18	286	8	22	13.3	680	2500	75
345	**M3GM**	**400 LA**	3324	1.7	2.3	0.18	315	7	22	16.0	780	2730	75
390	**M3GM**	**400 LB**	3758	1.7	2.3	0.18	352	7	18	20.1	870	2960	75
450	**M3GM**	**400 LKA**	4324	1.2	2.4	0.14	400	9	22	18.5	890	3160	78
490	**M3GM**	**400 LKB**	4709	1.2	2.4	0.14	432	9	22	20.5	960	3310	78
530	**M3GM**	**400 LKC**	5090	1.3	2.7	0.13	463	8	20	21.1	980	3390	78
560	**M3GM**	**450 LA**	5379	1.1	2.5	0.14	486	10	20	30.3	1070	4060	78
630	**M3GM**	**450 LB**	6049	1.2	2.6	0.14	539	9	20	34.5	1190	4360	78
695	**M3GM**	**450 LC**	6673	1.3	2.6	0.14	857	8	22	34.0	1250	4510	78
1000 r/min = 6 poles						**6000 V 50 Hz**							
220	**M3GM**	**355 LKA**	2118	1.7	2.5	0.21	210	7	16	8.1	540	2170	70
250	**M3GM**	**355 LKB**	2406	1.0	2.4	0.16	203	9	14	8.0	530	2150	70
280	**M3GM**	**400 L**	2697	1.3	2.2	0.16	261	9	20	10.5	590	2530	75
315	**M3GM**	**400 LA**	3033	1.4	2.3	0.16	291	8	20	11.8	640	2710	75
350	**M3GM**	**400 LB**	3372	1.4	2.2	0.16	319	8	20	12.7	680	2830	75
400	**M3GM**	**400 LKA**	3848	0.9	2.4	0.11	360	11	22	11.9	730	3090	78
450	**M3GM**	**400 LKC**	4326	1.0	2.6	0.11	400	10	22	14.0	820	3380	78
500	**M3GM**	**450 LA**	4801	1.2	2.6	0.14	439	9	20	28.2	1010	3880	78
560	**M3GM**	**450 LB**	5377	1.2	2.6	0.14	486	9	20	32.4	1130	4180	78
630	**M3GM**	**450 LC**	6050	1.4	2.5	0.16	539	7	20	37.2	1260	4480	78
650	**M3GM**	**450 LD**	6242	1.2	2.6	0.14	554	9	20	36.7	1250	4480	78
1000 r/min = 6 poles						**6600 V 50 Hz**							
250	**M3GM**	**355 LKA**	2403	1.3	2.8	0.16	236	8	13	8.3	540	2200	70
280	**M3GM**	**400 L**	2697	1.3	2.2	0.17	261	9	20	10.1	570	2470	75
315	**M3GM**	**400 LA**	3031	1.5	2.4	0.16	291	8	20	11.8	640	2710	75
355	**M3GM**	**400 LB**	3419	1.4	2.3	0.16	324	8	20	12.7	680	2830	75
400	**M3GM**	**400 LKA**	3847	0.9	2.4	0.11	360	11	22	11.9	730	3090	78
450	**M3GM**	**400 LKC**	4326	1.0	2.6	0.11	400	10	22	14.0	820	3380	78
500	**M3GM**	**450 LA**	4802	1.1	2.5	0.14	439	10	20	29.2	1040	3950	78
560	**M3GM**	**450 LB**	5379	1.1	2.5	0.14	486	9	20	32.4	1130	4170	78
630	**M3GM**	**450 LC**	6051	1.2	2.5	0.14	539	9	20	36.7	1250	4470	78

[1] The given values of load inertia assume three starts from cold and two starts from warm conditions in succession against quadratic load torque with 90% of the rated torque at the rated speed and at 80% of the rated voltage.
To check validity against other starting requirements, contact ABB.

[2] Starting time with given values of the load inertia from cold condition in succession against quadratic load torque with 90% of the rated torque at the rated speed and at rated voltage.

[3] The sound pressure levels are presented at no-load. Sound level values of 6…8-pole motors at no-load are typically 1...3 dB(A) higher than the corresponding values at no-load. The variation and measuring tolerance of the figures is +3 dB(A).

[4] Efficiency based on typical additional losses acc. to measurements.

HV Non-sparking motors Ex nA

Technical data for totally enclosed squirrel cage three phase cast iron motors

IP 55 - IC 411 - Insulation class F. temperature rise class B. ambient temperature 40°C

Output kW	Motor type			Product code	Speed r/min	Efficiency [4] Full load 100%	Efficiency 3/4 load 75%	Power factor Full load 100%	Power factor 3/4 load 75%	Current I_N A	I_S/I_N	I_0 A
750 r/min = 8 poles					**3000 V**	**50 Hz**						
200	**M3GM**	**400 LA**	3GGM	404 511-•QA	742	94.6	94.8	0.79	0.76	51	5.2	21
220	**M3GM**	**400 LB**	3GGM	404 521-•QA	742	94.8	95.0	0.79	0.75	56	5.5	24
250	**M3GM**	**400 LC**	3GGM	404 531-•QA	742	95.0	95.2	0.80	0.77	63	5.4	25
270	**M3GM**	**400 LD**	3GGM	404 541-•QA	741	95.0	95.3	0.80	0.77	68	5.4	26
290	**M3GM**	**400 LE**	3GGM	404 551-•QA	741	95.2	95.4	0.80	0.77	73	5.5	29
315	**M3GM**	**400 LKA**	3GGM	404 810-•QA	744	95.4	95.5	0.78	0.73	82	5.2	37
355	**M3GM**	**400 LKB**	3GGM	404 820-•QA	744	95.6	95.7	0.78	0.74	91	5.1	39
370	**M3GM**	**400 LKC**	3GGM	404 831-•QA	745	95.7	95.6	0.76	0.71	97	5.6	47
400	**M3GM**	**450 LA**	3GGM	454 510-•QA	746	96.0	95.8	0.78	0.74	102	5.8	46
450	**M3GM**	**450 LB**	3GGM	454 520-•QA	746	96.1	95.9	0.78	0.73	115	6.0	53
500	**M3GM**	**450 LC**	3GGM	454 530-•QA	746	96.2	96.1	0.78	0.74	127	6.0	58
530	**M3GM**	**450 LD**	3GGM	454 540-•QA	746	96.2	96.0	0.78	0.73	135	6.1	61
750 r/min = 8 poles					**3300 V**	**50 Hz**						
200	**M3GM**	**400 LA**	3GGM	404 511-•RA	742	94.6	94.8	0.79	0.76	46	5.1	18
220	**M3GM**	**400 LB**	3GGM	404 521-•RA	742	94.8	95.0	0.80	0.76	51	5.2	20
250	**M3GM**	**400 LC**	3GGM	404 531-•RA	741	94.9	95.2	0.80	0.78	57	5.0	21
280	**M3GM**	**400 LD**	3GGM	404 541-•RA	741	95.1	95.4	0.80	0.77	64	5.4	25
290	**M3GM**	**400 LE**	3GGM	404 551-•RA	742	95.1	95.3	0.80	0.76	67	5.7	27
315	**M3GM**	**400 LKA**	3GGM	404 810-•RA	744	95.5	95.6	0.77	0.72	74	5.3	34
345	**M3GM**	**400 LKB**	3GGM	404 821-•RA	744	95.5	95.6	0.78	0.74	81	5.2	36
375	**M3GM**	**400 LKC**	3GGM	404 830-•RA	744	95.7	95.7	0.77	0.72	89	5.5	42
400	**M3GM**	**450 LA**	3GGM	454 510-•RA	745	96.0	95.8	0.78	0.74	93	5.8	42
450	**M3GM**	**450 LB**	3GGM	454 520-•RA	745	96.1	95.9	0.78	0.73	104	5.9	47
500	**M3GM**	**450 LC**	3GGM	454 530-•RA	745	96.2	96.1	0.79	0.75	114	5.8	49
530	**M3GM**	**450 LD**	3GGM	454 540-•RA	745	96.1	96.1	0.80	0.75	121	5.8	52
750 r/min = 8 poles					**6000 V**	**50 Hz**						
160	**M3GM**	**400 LA**	3GGM	404 511-•TA	741	94.1	94.2	0.76	0.71	21	5.2	10
180	**M3GM**	**400 LB**	3GGM	404 521-•TA	740	94.2	94.4	0.77	0.72	24	5.0	11
200	**M3GM**	**400 LC**	3GGM	404 531-•TA	740	94.5	94.6	0.77	0.73	26	5.1	12
220	**M3GM**	**400 LD**	3GGM	404 541-•TA	740	94.6	94.7	0.78	0.74	29	4.9	12
250	**M3GM**	**400 LE**	3GGM	404 551-•TA	740	94.8	94.9	0.77	0.72	33	5.3	15
280	**M3GM**	**400 LKA**	3GGM	404 810-•TA	743	95.3	95.3	0.77	0.72	37	5.3	17
315	**M3GM**	**400 LKB**	3GGM	404 820-•TA	743	95.4	95.4	0.76	0.71	42	5.4	20
355	**M3GM**	**450 LA**	3GGM	454 510-•TA	746	95.7	95.6	0.78	0.74	45	5.8	20
400	**M3GM**	**450 LB**	3GGM	454 520-•TA	746	95.8	95.7	0.78	0.74	51	5.8	23
450	**M3GM**	**450 LC**	3GGM	454 530-•TA	745	95.9	95.9	0.80	0.76	56	5.6	24
500	**M3GM**	**450 LD**	3GGM	454 540-•TA	745	96.1	96.0	0.80	0.76	62	5.7	26
750 r/min = 8 poles					**6600 V**	**50 Hz**						
160	**M3GM**	**400 LA**	3GGM	404 511-•SA	741	94.2	94.2	0.76	0.71	20	5.3	9
180	**M3GM**	**400 LB**	3GGM	404 521-•SA	741	94.3	94.3	0.76	0.70	22	5.3	11
200	**M3GM**	**400 LC**	3GGM	404 531-•SA	739	94.3	94.6	0.78	0.74	24	4.8	10
220	**M3GM**	**400 LD**	3GGM	404 541-•SA	740	94.6	94.7	0.77	0.72	26	5.2	12
250	**M3GM**	**400 LE**	3GGM	404 551-•SA	741	94.8	94.8	0.76	0.71	30	5.4	14
280	**M3GM**	**400 LKA**	3GGM	404 810-•SA	743	95.3	95.3	0.76	0.71	34	5.4	16
315	**M3GM**	**400 LKB**	3GGM	404 820-•SA	743	95.4	95.4	0.76	0.71	38	5.4	18
355	**M3GM**	**450 LA**	3GGM	454 510-•SA	745	95.7	95.6	0.79	0.75	41	5.7	18
400	**M3GM**	**450 LB**	3GGM	454 520-•SA	745	95.8	95.8	0.80	0.75	46	5.6	19
450	**M3GM**	**450 LC**	3GGM	454 530-•SA	745	95.9	95.9	0.80	0.76	51	5.5	21
500	**M3GM**	**450 LD**	3GGM	454 540-•SA	745	96.0	96.0	0.81	0.77	56	5.5	22

The bullet in the product code indicates choice of mounting arrangement (see ordering information page).

When ordering variant code for protection type has to be added to the product code according to needs:

456 Ex nA design, fulfilling IEC 60079-15, with certificate.
480 Ex nA II according to ATEX directive 94/9/EC, temperature class T3.

HV Non-sparking motors Ex nA

Technical data for totally enclosed squirrel cage three phase cast iron motors

IP 55 - IC 411 - Insulation class F. temperature rise class B. ambient temperature 40°C

Output kW	Motor type		Torque T_N Nm	T_S / T_N	T_{max} / T_N	Power factor cos ϕ_k	Load inertia [1] kgm²	Starting time cold [2] s	Maximum stalling time hot s	Rotor inertia kgm²	Rotor weight kg	Motor weight kg	Sound pressure level LP [3] dB(A)
750 r/min = 8 poles						**3000 V 50 Hz**							
200	**M3GM**	**400 LA**	2575	1.0	2.4	0.15	388	11	22	13.6	630	2370	75
220	**M3GM**	**400 LB**	2831	1.1	2.5	0.15	423	10	22	15.0	680	2490	75
250	**M3GM**	**400 LC**	3219	1.1	2.4	0.14	476	10	22	17.7	780	2730	75
270	**M3GM**	**400 LD**	3479	1.1	2.4	0.15	510	10	22	19.1	830	2830	75
290	**M3GM**	**400 LE**	3736	1.1	2.4	0.14	545	9	22	20.5	870	2960	75
315	**M3GM**	**400 LKA**	4041	1.2	2.1	0.18	587	11	20	20.0	880	3080	75
355	**M3GM**	**400 LKB**	4557	1.1	2.1	0.17	655	12	20	22.0	950	3270	75
370	**M3GM**	**400 LKC**	4745	1.3	2.3	0.18	680	10	22	21.8	1000	3380	75
400	**M3GM**	**450 LA**	5124	1.1	2.4	0.14	730	11	20	30.8	1080	4050	76
450	**M3GM**	**450 LB**	5763	1.2	2.5	0.14	811	10	20	33.0	1140	4200	76
500	**M3GM**	**450 LC**	6404	1.2	2.5	0.14	892	10	20	37.3	1260	4500	76
530	**M3GM**	**450 LD**	6787	1.2	2.6	0.14	940	10	20	39.5	1330	4620	76
750 r/min = 8 poles						**3300 V 50 Hz**							
200	**M3GM**	**400 LA**	2576	1.0	2.3	0.15	388	11	22	13.6	630	2370	75
220	**M3GM**	**400 LB**	2833	1.0	2.4	0.15	423	10	22	15.0	680	2490	75
250	**M3GM**	**400 LC**	3224	1.0	2.2	0.15	476	11	22	17.7	780	2720	75
280	**M3GM**	**400 LD**	3607	1.1	2.4	0.14	528	10	22	19.1	830	2840	75
290	**M3GM**	**400 LE**	3734	1.2	2.5	0.15	545	9	22	20.5	870	2950	75
315	**M3GM**	**400 LKA**	4041	1.2	2.2	0.17	587	11	20	20.0	880	3100	75
345	**M3GM**	**400 LKB**	4428	1.2	2.2	0.18	638	11	22	20.5	950	3260	75
375	**M3GM**	**400 LKC**	4811	1.3	2.3	0.17	688	10	20	23.3	990	3390	75
400	**M3GM**	**450 LA**	5124	1.1	2.4	0.14	730	11	20	30.8	1080	4040	76
450	**M3GM**	**450 LB**	5764	1.1	2.5	0.14	811	10	20	33.0	1140	4190	76
500	**M3GM**	**450 LC**	6406	1.1	2.4	0.14	892	11	20	37.3	1260	4490	76
530	**M3GM**	**450 LD**	6790	1.1	2.4	0.14	940	11	20	39.5	1330	4620	76
750 r/min = 8 poles						**6000 V 50 Hz**							
160	**M3GM**	**400 LA**	2062	1.1	2.5	0.16	315	10	22	10.2	560	2400	75
180	**M3GM**	**400 LB**	2322	1.0	2.4	0.16	352	11	22	10.7	580	2460	75
200	**M3GM**	**400 LC**	2580	1.1	2.4	0.15	388	10	22	12.1	640	2640	75
220	**M3GM**	**400 LD**	2840	1.0	2.3	0.15	423	10	22	13.0	680	2760	75
250	**M3GM**	**400 LE**	3225	1.1	2.5	0.15	476	9	22	14.4	740	2930	75
280	**M3GM**	**400 LKA**	3597	1.0	2.4	0.13	528	11	20	15.0	790	3240	75
315	**M3GM**	**400 LKB**	4047	1.0	2.5	0.13	587	10	20	15.9	830	3350	75
355	**M3GM**	**450 LA**	4547	1.1	2.4	0.15	655	11	20	28.6	1020	3850	76
400	**M3GM**	**450 LB**	5124	1.1	2.4	0.15	730	10	20	30.8	1080	4000	76
450	**M3GM**	**450 LC**	5766	1.1	2.3	0.15	811	11	20	35.2	1200	4300	76
500	**M3GM**	**450 LD**	6406	1.1	2.3	0.15	892	11	20	39.5	1330	4600	76
750 r/min = 8 poles						**6600 V 50 Hz**							
160	**M3GM**	**400 LA**	2061	1.1	2.6	0.16	315	10	22	10.7	580	2450	75
180	**M3GM**	**400 LB**	2319	1.1	2.6	0.16	352	10	22	10.7	580	2460	75
200	**M3GM**	**400 LC**	2583	1.0	2.2	0.15	388	11	22	12.1	640	2630	75
220	**M3GM**	**400 LD**	2838	1.1	2.4	0.15	423	10	22	13.0	680	2750	75
250	**M3GM**	**400 LE**	3223	1.2	2.6	0.15	476	9	22	14.4	740	2930	75
280	**M3GM**	**400 LKA**	3596	1.0	2.5	0.13	528	10	20	15.0	790	3230	75
315	**M3GM**	**400 LKB**	4047	1.0	2.5	0.13	587	10	20	15.9	830	3350	75
355	**M3GM**	**450 LA**	4548	1.1	2.4	0.15	655	12	20	29.7	1050	3920	76
400	**M3GM**	**450 LB**	5125	1.1	2.3	0.15	730	11	20	31.9	1110	4070	76
450	**M3GM**	**450 LC**	5767	1.1	2.3	0.15	811	12	20	35.2	1200	4300	76
500	**M3GM**	**450 LD**	6408	1.0	2.2	0.15	892	12	20	39.5	1330	4590	76

[1] The given values of load inertia assume three starts from cold and two starts from warm conditions in succession against quadratic load torque with 90% of the rated torque at the rated speed and at 80% of the rated voltage.
To check validity against other starting requirements, contact ABB.

[2] Starting time with given values of the load inertia from cold condition in succession against quadratic load torque with 90% of the rated torque at the rated speed and at rated voltage.

[3] The sound pressure levels are presented at no-load. Sound level values of 6…8-pole motors at no-load are typically 1...3 dB(A) higher than the corresponding values at no-load. The variation and measuring tolerance of the figures is +3 dB(A).

[4] Efficiency based on typical additional losses acc. to measurements.

HV Non-sparking motors Ex nA

Technical data for totally enclosed squirrel cage three phase cast iron motors

IP 55 - IC 411 - Insulation class F. temperature rise class B. ambient temperature 50°C

Output kW		Motor type		Product code		Speed r/min	Efficiency Full load 100%	Efficiency 3/4 load 75%	Power factor Full load 100%	Power factor 3/4 load 75%	Current I_N A	Current I_S/I_N	Current I_0 A
3000 r/min = 2 poles						**3300 V**	**50 Hz**						
180	5)	**M3GM**	**355 LKA**	3GGM	351 810-•RB	2979	94.4	94.3	0.90	0.90	37	5.3	7
200	5)	**M3GM**	**355 LKB**	3GGM	351 820-•RB	2980	94.9	94.8	0.91	0.91	41	5.3	7
224	5)	**M3GM**	**355 LKC**	3GGM	351 830-•RB	2980	95.1	95.1	0.91	0.92	45	5.4	7
250	5)	**M3GM**	**355 LKD**	3GGM	351 840-•RB	2980	95.4	95.4	0.91	0.92	50	5.4	8
265	5)	**M3GM**	**355 LKE**	3GGM	351 850-•RB	2978	95.4	95.5	0.91	0.92	53	5.3	8
280	5)	**M3GM**	**400 LKA**	3GGM	401 810-•RB	2981	95.4	95.3	0.91	0.91	57	5.3	10
315	5)	**M3GM**	**400 LKB**	3GGM	401 820-•RB	2982	95.6	95.6	0.90	0.90	64	5.3	12
355	5)	**M3GM**	**400 LKC**	3GGM	401 830-•RB	2983	95.9	95.9	0.91	0.91	71	5.4	12
400	5)	**M3GM**	**400 LKD**	3GGM	401 840-•RB	2983	96.1	96.2	0.92	0.92	79	5.4	11
450	5)	**M3GM**	**400 LKE**	3GGM	401 850-•RB	2982	96.2	96.4	0.92	0.93	89	5.3	12
3000 r/min = 2 poles						**6600 V**	**50 Hz**						
224	5)	**M3GM**	**400 LKA**	3GGM	401 810-•SB	2982	94.9	94.6	0.88	0.88	23	5.4	5
250	5)	**M3GM**	**400 LKB**	3GGM	401 820-•SB	2982	95.0	94.9	0.88	0.88	26	5.4	5
280	5)	**M3GM**	**400 LKC**	3GGM	401 830-•SB	2982	95.2	95.2	0.91	0.91	28	5.4	5
315	5)	**M3GM**	**400 LKD**	3GGM	401 840-•SB	2982	95.3	95.4	0.91	0.91	32	5.4	5
355	5)	**M3GM**	**400 LKE**	3GGM	401 850-•SB	2982	95.6	95.7	0.91	0.92	36	5.4	5
400	5)	**M3GM**	**400 LKF**	3GGM	401 860-•SB	2982	95.9	96.1	0.91	0.92	40	5.4	6

8

The bullet in the product code indicates choice of mounting arrangement (see ordering information page).

When ordering variant code for protection type has to be added to the product code according to needs:

456 Ex nA design, fulfilling IEC 60079-15, with certificate.
480 Ex nA II according to ATEX directive 94/9/EC, temperature class T3.

HV Non-sparking motors Ex nA

Technical data for totally enclosed squirrel cage three phase cast iron motors

IP 55 - IC 411 - Insulation class F. temperature rise class B. ambient temperature 50°C

Output kW		Motor type		Torque T_N Nm	T_S / T_N	T_{max} / T_N	Power factor cos ϕ_k	Load inertia [1] kgm²	Starting time cold [2] s	Maximum stalling time hot s	Rotor inertia kgm²	Rotor weight kg	Motor weight kg	Sound pressure level LP [3] dB(A)
3000 r/min = 2 poles						**3300 V 50 Hz**								
180	[4]	**M3GM**	**355 LKA**	577	0.5	2.5	0.11	13	15	20	3.1	290	1750	78
200	[4]	**M3GM**	**355 LKB**	641	0.6	2.5	0.11	15	14	20	3.9	340	1980	78
224	[4]	**M3GM**	**355 LKC**	718	0.6	2.5	0.11	16	14	20	4.2	360	2070	78
250	[4]	**M3GM**	**355 LKD**	801	0.6	2.5	0.11	18	13	20	4.6	390	2210	78
265	[4]	**M3GM**	**355 LKE**	850	0.6	2.4	0.11	19	13	20	4.6	390	2210	78
280	[4]	**M3GM**	**400 LKA**	897	0.4	2.5	0.09	20	19	25	5.6	430	2440	79
315	[4]	**M3GM**	**400 LKB**	1009	0.5	2.5	0.09	22	17	25	6.0	440	2500	79
355	[4]	**M3GM**	**400 LKC**	1137	0.5	2.5	0.09	24	16	25	7.6	500	2740	79
400	[4]	**M3GM**	**400 LKD**	1281	0.5	2.5	0.10	27	15	20	10.0	570	3090	79
450	[4]	**M3GM**	**400 LKE**	1441	0.6	2.4	0.10	30	14	20	10.8	600	3190	79
3000 r/min = 2 poles						**6600 V 50 Hz**								
224	[4]	**M3GM**	**400 LKA**	717	0.8	2.4	0.13	16	12	20	6.4	480	2530	79
250	[4]	**M3GM**	**400 LKB**	801	0.8	2.4	0.12	18	11	20	6.4	480	2530	79
280	[4]	**M3GM**	**400 LKC**	897	0.5	2.5	0.10	20	17	25	6.7	460	2510	79
315	[4]	**M3GM**	**400 LKD**	1009	0.5	2.4	0.10	19	15	20	6.7	460	2510	79
355	[4]	**M3GM**	**400 LKE**	1137	0.5	2.4	0.10	23	15	20	7.7	510	2740	79
400	[4]	**M3GM**	**400 LKF**	1281	0.5	2.4	0.10	27	15	20	10.4	580	3090	79

[1] **355LK:** The given values of load inertia assume two starts from cold and one start from warm conditions in succession against quadratic load torque with 75% of the rated torque at the rated speed and at 80% of the rated voltage.

400LK: The given values of load inertia assume two starts from cold and one start from warm conditions in succession against quadratic load torque with 70% of the rated torque at the rated speed and at 80% of the rated voltage.

To check validity against other starting requirements, contact ABB.

[2] **355LK:** Starting time with given values of the load inertia from cold condition in succession against quadratic load torque with 75% of the rated torque at the rated speed and at rated voltage.

400LK: Starting time with given values of the load inertia from cold condition in succession against quadratic load torque with 70% of the rated torque at the rated speed and at rated voltage.

[3] The sound pressure levels are presented at no-load. The magnetic noise level of 2- and 4-pole motors is typically low compared to the fan noise, resulting no increase in the noise level on-load. The variation and measuring tolerance of the figures is +3 dB(A).

[4] Efficiency based on typical additional losses acc. to measurements.

[5] Unidirectional fan construction as standard. Direction of rotation must be stated when ordering, see variant codes 044 and 045.

HV Non-sparking motors Ex nA

Technical data for totally enclosed squirrel cage three phase cast iron motors

IP 55 - IC 411 - Insulation class F. temperature rise class B. ambient temperature 50°C

Output kW	Motor type		Product code		Speed r/min	Efficiency Full load 100%	Efficiency 3/4 load 75%	Power factor Full load 100%	Power factor 3/4 load 75%	Current I_N A	Current I_S/I_N	Current I_0 A
1500 r/min = 4 poles					**3300 V**	**50 Hz**						
132	**M3GM**	**315 LKA**	3GGM	312 810-•RB	1486	94.4	94.4	0.85	0.83	29	5.2	10
140	**M3GM**	**315 LKB**	3GGM	312 820-•RB	1486	94.6	94.6	0.85	0.83	30	5.4	10
155	**M3GM**	**315 LKC**	3GGM	312 830-•RB	1485	94.7	94.8	0.85	0.83	33	5.3	11
180	**M3GM**	**355 LKA**	3GGM	352 810-•RB	1490	94.8	94.6	0.83	0.79	40	5.4	15
200	**M3GM**	**355 LKB**	3GGM	352 820-•RB	1490	95.1	94.9	0.84	0.81	44	5.3	15
224	**M3GM**	**355 LKC**	3GGM	352 830-•RB	1490	95.3	95.2	0.84	0.82	49	5.2	16
250	**M3GM**	**355 LKD**	3GGM	352 840-•RB	1490	95.5	95.4	0.84	0.82	54	5.4	18
280	**M3GM**	**355 LKE**	3GGM	352 850-•RB	1490	95.5	95.5	0.85	0.82	61	5.2	20
315	**M3GM**	**355 LKF**	3GGM	352 860-•RB	1490	95.7	95.7	0.85	0.83	68	5.3	22
335	**M3GM**	**355 LKG**	3GGM	352 870-•RB	1490	95.9	95.8	0.85	0.83	72	5.4	23
355	**M3GM**	**400 LKA**	3GGM	402 810-•RB	1489	95.8	95.8	0.85	0.83	76	5.0	23
400	**M3GM**	**400 LKB**	3GGM	402 820-•RB	1490	96.0	96.0	0.85	0.83	86	5.2	27
450	**M3GM**	**400 LKC**	3GGM	402 830-•RB	1490	96.2	96.2	0.86	0.84	95	5.3	28
500	**M3GM**	**400 LKD**	3GGM	402 840-•RB	1490	96.4	96.4	0.86	0.85	105	5.4	29
560	**M3GM**	**450 LA**	3GGM	452 510-•RB	1491	96.3	96.2	0.86	0.86	117	5.4	31
600	**M3GM**	**450 LB**	3GGM	452 520-•RB	1491	96.4	96.4	0.87	0.86	125	5.4	32
1500 r/min = 4 poles					**6600 V**	**50 Hz**						
224	**M3GM**	**355 LKA**	3GGM	352 810-•SB	1487	95.2	95.2	0.84	0.82	24	5.3	8
250	**M3GM**	**355 LKB**	3GGM	352 820-•SB	1487	95.4	95.4	0.85	0.82	27	5.4	9
280	**M3GM**	**400 LKA**	3GGM	402 810-•SB	1491	95.2	95.0	0.84	0.81	31	5.4	11
315	**M3GM**	**400 LKB**	3GGM	402 820-•SB	1491	95.3	95.3	0.85	0.82	34	5.3	11
355	**M3GM**	**400 LKC**	3GGM	402 830-•SB	1490	95.8	95.8	0.86	0.85	37	5.3	10
400	**M3GM**	**400 LKD**	3GGM	402 840-•SB	1491	96.0	96.0	0.87	0.85	42	5.4	12
450	**M3GM**	**400 LKE**	3GGM	402 850-•SB	1490	96.1	96.2	0.87	0.86	47	5.3	13
500	**M3GM**	**450 LA**	3GGM	452 510-•SB	1491	96.1	96.0	0.86	0.85	53	5.4	14
560	**M3GM**	**450 LB**	3GGM	452 520-•SB	1491	96.3	96.2	0.86	0.85	59	5.4	16

The bullet in the product code indicates choice of mounting arrangement (see ordering information page).

When ordering variant code for protection type has to be added to the product code according to needs:

456 Ex nA design, fulfilling IEC 60079-15, with certificate.
480 Ex nA II according to ATEX directive 94/9/EC, temperature class T3.

HV Non-sparking motors Ex nA

Technical data for totally enclosed squirrel cage three phase cast iron motors

IP 55 - IC 411 - Insulation class F. temperature rise class B. ambient temperature 50°C

Output kW	Motor type		Torque T_N Nm	T_S / T_N	T_{max} / T_N	Power factor cos ϕ_k	Load inertia [1] kgm²	Starting time cold [2] s	Maximum stalling time hot s	Rotor inertia kgm²	Rotor weight kg	Motor weight kg	Sound pressure level LP [3] dB(A)
1500 r/min = 4 poles					**3300 V 50 Hz**								
132	**M3GM**	**315 LKA**	848	0.8	2.4	0.15	49	11	20	1.9	220	1180	73
140	**M3GM**	**315 LKB**	900	0.8	2.5	0.15	52	11	20	2.0	230	1210	73
155	**M3GM**	**315 LKC**	997	0.8	2.4	0.15	57	11	20	2.1	240	1250	73
180	**M3GM**	**355 LKA**	1153	0.9	2.4	0.15	65	11	20	5.0	370	1750	74
200	**M3GM**	**355 LKB**	1282	0.9	2.3	0.15	71	11	20	5.5	400	1840	74
224	**M3GM**	**355 LKC**	1435	0.9	2.3	0.15	79	11	20	6.1	430	1940	74
250	**M3GM**	**355 LKD**	1602	1.0	2.3	0.15	87	10	20	6.7	460	2030	74
280	**M3GM**	**355 LKE**	1795	0.9	2.2	0.15	97	11	20	6.9	470	2060	74
315	**M3GM**	**355 LKF**	2019	1.0	2.3	0.15	107	10	20	7.8	520	2200	74
335	**M3GM**	**355 LKG**	2147	1.0	2.3	0.15	113	10	20	8.3	550	2300	74
355	**M3GM**	**400 LKA**	2277	0.7	2.2	0.11	119	13	20	9.6	560	2670	79
400	**M3GM**	**400 LKB**	2564	0.7	2.3	0.11	132	12	18	12.0	600	2790	79
450	**M3GM**	**400 LKC**	2884	0.7	2.3	0.11	147	12	18	14.4	660	3020	79
500	**M3GM**	**400 LKD**	3204	0.7	2.3	0.11	161	11	18	18.0	760	3350	79
560	**M3GM**	**450 LA**	3586	1.0	2.3	0.13	177	10	20	23.5	970	4280	83
600	**M3GM**	**450 LB**	3843	1.0	2.2	0.13	188	10	20	30.7	1070	4570	83
1500 r/min = 4 poles					**6600 V 50 Hz**								
224	**M3GM**	**355 LKA**	1438	1.1	2.3	0.16	79	9	20	4.8	390	2050	74
250	**M3GM**	**355 LKB**	1606	1.1	2.3	0.16	87	9	20	5.5	420	2190	74
280	**M3GM**	**400 LKA**	1793	1.0	2.4	0.15	97	10	20	10.2	560	2560	79
315	**M3GM**	**400 LKB**	2018	0.7	2.3	0.12	107	14	20	9.6	560	2600	79
355	**M3GM**	**400 LKC**	2275	0.7	2.3	0.12	119	13	20	13.8	650	2900	79
400	**M3GM**	**400 LKD**	2562	0.7	2.3	0.11	132	12	20	16.2	710	3130	79
450	**M3GM**	**400 LKE**	2884	0.7	2.3	0.11	147	12	20	17.4	750	3240	79
500	**M3GM**	**450 LA**	3202	1.1	2.2	0.15	161	9	20	28.6	1030	4390	83
560	**M3GM**	**450 LB**	3586	1.1	2.2	0.15	177	9	20	30.7	1080	4550	83

[1] **315LK:** The given values of load inertia assume three starts from cold and two starts from warm conditions in succession against quadratic load torque with 90% of the rated torque at the rated speed and at 80% of the rated voltage.

355LK: The given values of load inertia assume two starts from cold and one start from warm conditions in succession against quadratic load torque with 80% of the rated torque at the rated speed and at 80% of the rated voltage.

400LK, 450L: The given values of load inertia assume two starts from cold and one start from warm conditions in succession against quadratic load torque with 75% of the rated torque at the rated speed and at 80% of the rated voltage.

To check validity against other starting requirements, contact ABB.

[2] **315LK:** Starting time with given values of the load inertia from cold condition in succession against quadratic load torque with 90% of the rated torque at the rated speed and at rated voltage.

355LK: Starting time with given values of the load inertia from cold condition in succession against quadratic load torque with 80% of the rated torque at the rated speed and at rated voltage.

400LK, 450L: Starting time with given values of the load inertia from cold condition in succession against quadratic load torque with 75% of the rated torque at the rated speed and at rated voltage.

[3] The sound pressure levels are presented at no-load. The magnetic noise level of 2- and 4-pole motors is typically low compared to the fan noise, resulting no increase in the noise level on-load. The variation and measuring tolerance of the figures is +3 dB(A).

[4] Efficiency based on typical additional losses acc. to measurements.

HV Non-sparking motors Ex nA

Technical data for totally enclosed squirrel cage three phase cast iron motors

IP 55 - IC 411 - Insulation class F. temperature rise class B. ambient temperature 50°C

Output kW	Motor type		Product code		Speed r/min	Efficiency Full load 100%	Efficiency 3/4 load 75%	Power factor Full load 100%	Power factor 3/4 load 75%	Current I_N A	Current I_S / I_N	Current I_0 A
1000 r/min = 6 poles					**3300 V**	**50 Hz**						
112	**M3GM**	**315 LKA**	3GGM	313 810-•RB	990	94.4	94.6	0.79	0.75	26	5.1	11
125	**M3GM**	**315 LKB**	3GGM	313 820-•RB	990	94.6	94.7	0.79	0.75	29	5.1	13
132	**M3GM**	**315 LKC**	3GGM	313 830-•RB	991	94.8	94.8	0.78	0.73	31	5.3	14
140	**M3GM**	**355 LKA**	3GGM	353 810-•RB	993	95.1	95.1	0.78	0.74	33	5.0	14
160	**M3GM**	**355 LKB**	3GGM	353 820-•RB	993	95.4	95.4	0.79	0.75	37	5.1	16
180	**M3GM**	**355 LKC**	3GGM	353 830-•RB	993	95.5	95.5	0.78	0.74	42	5.2	18
200	**M3GM**	**355 LKD**	3GGM	353 840-•RB	993	95.7	95.7	0.79	0.75	46	5.2	20
224	**M3GM**	**355 LKE**	3GGM	353 850-•RB	993	95.8	95.8	0.79	0.74	52	5.3	22
250	**M3GM**	**355 LKF**	3GGM	353 860-•RB	992	95.7	95.8	0.79	0.75	58	5.1	24
280	**M3GM**	**355 LKG**	3GGM	353 870-•RB	993	95.9	96.0	0.79	0.74	65	5.3	28
355	**M3GM**	**400 LKA**	3GGM	403 811-•RB	993	96.0	96.1	0.81	0.78	80	5.3	30
400	**M3GM**	**400 LKB**	3GGM	403 821-•RB	994	96.2	96.2	0.81	0.78	89	5.5	33
425	**M3GM**	**400 LKC**	3GGM	403 831-•RB	993	96.2	96.3	0.82	0.79	94	5.4	34
450	**M3GM**	**450 LA**	3GGM	453 510-•RB	993	96.2	96.4	0.84	0.83	97	5.3	29
500	**M3GM**	**450 LB**	3GGM	453 520-•RB	993	96.4	96.5	0.85	0.83	107	5.4	32
560	**M3GM**	**450 LC**	3GGM	453 530-•RB	993	96.5	96.6	0.85	0.84	119	5.4	34
1000 r/min = 6 poles					**6600 V**	**50 Hz**						
150	**M3GM**	**355 LKA**	3GGM	353 810-•SB	991	94.9	94.9	0.77	0.72	18	5.2	8
160	**M3GM**	**355 LKB**	3GGM	353 820-•SB	990	95.0	95.0	0.78	0.73	19	5.2	9
180	**M3GM**	**355 LKC**	3GGM	353 830-•SB	990	95.1	95.2	0.78	0.74	21	5.0	9
200	**M3GM**	**355 LKD**	3GGM	353 840-•SB	990	95.3	95.3	0.77	0.72	24	5.2	11
280	**M3GM**	**400 LKA**	3GGM	403 811-•SB	993	95.6	95.5	0.78	0.74	33	5.1	14
315	**M3GM**	**400 LKB**	3GGM	403 821-•SB	993	95.8	95.7	0.79	0.75	37	5.2	15
355	**M3GM**	**400 LKC**	3GGM	403 831-•SB	993	96.0	95.9	0.79	0.75	41	5.4	17
375	**M3GM**	**400 LKD**	3GGM	403 841-•SB	993	96.1	96.0	0.80	0.76	43	5.4	17
400	**M3GM**	**450 LA**	3GGM	453 510-•SB	994	96.1	96.1	0.84	0.82	43	5.4	14
450	**M3GM**	**450 LB**	3GGM	453 520-•SB	994	96.2	96.3	0.84	0.83	48	5.3	15
500	**M3GM**	**450 LC**	3GGM	453 530-•SB	994	96.3	96.4	0.85	0.83	54	5.4	16
525	**M3GM**	**450 LD**	3GGM	453 541-•SB	993	96.3	96.5	0.85	0.84	56	5.5	16

8

The bullet in the product code indicates choice of mounting arrangement (see ordering information page).

When ordering variant code for protection type has to be added to the product code according to needs:

456 Ex nA design, fulfilling IEC 60079-15, with certificate.
480 Ex nA II according to ATEX directive 94/9/EC, temperature class T3.

HV Non-sparking motors Ex nA

Technical data for totally enclosed squirrel cage three phase cast iron motors

IP 55 - IC 411 - Insulation class F. temperature rise class B. ambient temperature 50°C

Output kW	Motor type		Torque T_N Nm	T_S/T_N	T_{max}/T_N	Power factor cos ϕ_k	Load inertia [1] kgm²	Starting time cold [2] s	Maximum stalling time hot s	Rotor inertia kgm²	Rotor weight kg	Motor weight kg	Sound pressure level LP [3] dB(A)
1000 r/min = 6 poles					**3300 V 50 Hz**								
112	**M3GM**	**315 LKA**	1080	1.1	2.3	0.18	113	11	20	3.1	290	1230	65
125	**M3GM**	**315 LKB**	1206	1.1	2.2	0.18	125	11	20	3.3	300	1260	65
132	**M3GM**	**315 LKC**	1272	1.2	2.4	0.18	131	10	20	3.5	310	1300	65
140	**M3GM**	**355 LKA**	1347	0.8	2.2	0.14	139	14	20	5.0	370	1740	70
160	**M3GM**	**355 LKB**	1539	0.8	2.3	0.13	157	14	20	5.8	410	1870	70
180	**M3GM**	**355 LKC**	1731	0.9	2.3	0.13	175	13	20	6.1	430	1920	70
200	**M3GM**	**355 LKD**	1924	0.9	2.3	0.13	192	13	20	6.6	460	2010	70
224	**M3GM**	**355 LKE**	2154	0.9	2.3	0.13	213	12	20	7.2	490	2100	70
250	**M3GM**	**355 LKF**	2406	0.9	2.2	0.13	236	13	20	7.5	500	2130	70
280	**M3GM**	**355 LKG**	2694	0.9	2.3	0.13	261	12	20	8.3	550	2270	70
355	**M3GM**	**400 LKA**	3412	1.0	2.3	0.14	324	11	22	17.9	860	3100	78
400	**M3GM**	**400 LKB**	3843	1.1	2.4	0.14	360	11	22	21.1	980	3390	78
425	**M3GM**	**400 LKC**	4085	1.1	2.2	0.14	380	11	22	21.0	980	3380	78
450	**M3GM**	**450 LA**	4327	1.1	2.1	0.16	400	10	20	33.6	1050	4000	78
500	**M3GM**	**450 LB**	4807	1.2	2.2	0.16	439	10	20	36.6	1110	4150	78
560	**M3GM**	**450 LC**	5385	1.2	2.1	0.16	486	9	20	45.4	1290	4580	78
1000 r/min = 6 poles					**6600 V 50 Hz**								
150	**M3GM**	**355 LKA**	1446	1.0	2.4	0.15	148	11	20	4.8	390	2040	70
160	**M3GM**	**355 LKB**	1543	1.0	2.4	0.15	157	11	20	5.0	410	2090	70
180	**M3GM**	**355 LKC**	1737	0.9	2.3	0.15	175	12	20	5.3	420	2140	70
200	**M3GM**	**355 LKD**	1929	1.0	2.4	0.15	192	11	20	5.7	440	2230	70
280	**M3GM**	**400 LKA**	2693	1.0	2.2	0.14	261	11	22	9.6	630	2740	78
315	**M3GM**	**400 LKB**	3030	1.1	2.2	0.14	291	11	22	10.9	680	2920	78
355	**M3GM**	**400 LKC**	3414	1.1	2.3	0.14	324	10	22	12.6	750	3150	78
375	**M3GM**	**400 LKD**	3606	1.1	2.2	0.14	340	10	22	14.3	830	3380	78
400	**M3GM**	**450 LA**	3844	1.2	2.2	0.17	360	10	20	30.8	1080	4030	78
450	**M3GM**	**450 LB**	4325	1.2	2.2	0.17	400	10	20	39.5	1170	4250	78
500	**M3GM**	**450 LC**	4806	1.2	2.2	0.17	439	10	20	43.9	1260	4480	78
525	**M3GM**	**450 LD**	5048	1.2	2.2	0.16	459	9	22	34.5	1260	4480	78

[1] **315LK, 355LK:** The given values of load inertia assume three starts from cold and two starts from warm conditions in succession against quadratic load torque with 90% of the rated torque at the rated speed and at 80% of the rated voltage.

400LK, 450L: The given values of load inertia assume two starts from cold and one start from warm conditions in succession against quadratic load torque with 80% of the rated torque at the rated speed and at 80% of the rated voltage.

To check validity against other starting requirements, contact ABB.

[2] **315LK, 355LK:** Starting time with given values of the load inertia from cold condition in succession against quadratic load torque with 90% of the rated torque at the rated speed and at rated voltage.

400LK, 450L: Starting time with given values of the load inertia from cold condition in succession against quadratic load torque with 80% of the rated torque at the rated speed and at rated voltage.

[3] The sound pressure levels are presented at no-load. Sound level values of 6…8-pole motors at no-load are typically 1...3 dB(A) higher than the corresponding values at no-load. The variation and measuring tolerance of the figures is +3 dB(A).

[4] Efficiency based on typical additional losses acc. to measurements.

HV Non-sparking motors Ex nA

Technical data for totally enclosed squirrel cage three phase cast iron motors

IP 55 - IC 411 - Insulation class F. temperature rise class B. ambient temperature 50°C

Output kW	Motor type		Product code		Speed r/min	Efficiency Full load 100%	Efficiency 3/4 load 75%	Power factor Full load 100%	Power factor 3/4 load 75%	Current I_N A	Current I_S / I_N	Current I_0 A
750 r/min = 8 poles					**3300 V**	**50 Hz**						
160	**M3GM**	**400 LKA**	3GGM	404 810-•RB	744	94.6	94.6	0.76	0.71	39	5.0	19
180	**M3GM**	**400 LKB**	3GGM	404 820-•RB	744	94.8	94.9	0.77	0.73	43	4.9	19
200	**M3GM**	**400 LKC**	3GGM	404 830-•RB	744	95.0	95.1	0.78	0.73	47	5.0	21
224	**M3GM**	**400 LKD**	3GGM	404 840-•RB	744	95.2	95.2	0.78	0.74	53	5.2	23
250	**M3GM**	**400 LKE**	3GGM	404 850-•RB	745	95.4	95.4	0.78	0.73	59	5.4	26
280	**M3GM**	**400 LKF**	3GGM	404 860-•RB	745	95.6	95.6	0.78	0.74	65	5.4	29
315	**M3GM**	**400 LKG**	3GGM	404 870-•RB	744	95.6	95.6	0.78	0.74	74	5.4	33
355	**M3GM**	**450 LA**	3GGM	454 510-•RB	745	95.9	95.8	0.79	0.75	82	5.4	35
400	**M3GM**	**450 LB**	3GGM	454 520-•RB	745	96.0	95.9	0.79	0.74	92	5.4	40
450	**M3GM**	**450 LC**	3GGM	454 530-•RB	745	96.1	96.0	0.79	0.74	104	5.5	45
750 r/min = 8 poles					**6600 V**	**50 Hz**						
160	**M3GM**	**400 LKA**	3GGM	404 810-•SB	744	94.5	94.4	0.75	0.70	20	5.0	10
180	**M3GM**	**400 LKB**	3GGM	404 820-•SB	744	94.7	94.7	0.76	0.71	22	4.9	10
200	**M3GM**	**400 LKC**	3GGM	404 830-•SB	744	95.0	94.9	0.76	0.71	24	5.1	12
224	**M3GM**	**400 LKD**	3GGM	404 840-•SB	744	95.1	95.0	0.76	0.70	27	5.3	13
250	**M3GM**	**400 LKE**	3GGM	404 850-•SB	744	95.2	95.1	0.76	0.71	30	5.3	15
280	**M3GM**	**400 LKF**	3GGM	404 860-•SB	744	95.3	95.2	0.75	0.69	34	5.4	17
315	**M3GM**	**450 LA**	3GGM	454 510-•SB	745	95.6	95.5	0.79	0.75	36	5.4	16
355	**M3GM**	**450 LB**	3GGM	454 520-•SB	745	95.8	95.7	0.79	0.75	41	5.3	17
400	**M3GM**	**450 LC**	3GGM	454 530-•SB	745	95.9	95.8	0.79	0.75	46	5.3	19

8

The bullet in the product code indicates choice of mounting arrangement (see ordering information page).

When ordering variant code for protection type has to be added to the product code according to needs:

456 Ex nA design, fulfilling IEC 60079-15, with certificate.
480 Ex nA II according to ATEX directive 94/9/EC, temperature class T3.

HV Non-sparking motors Ex nA

Technical data for totally enclosed squirrel cage three phase cast iron motors

IP 55 - IC 411 - Insulation class F. temperature rise class B. ambient temperature 50°C

Output kW	Motor type		Torque T_N Nm	T_S/T_N	T_{max}/T_N	Power factor cos ϕ_k	Load inertia [1] kgm²	Starting time cold [2] s	Maximum stalling time hot s	Rotor inertia kgm²	Rotor weight kg	Motor weight kg	Sound pressure level LP [3] dB(A)
750 r/min = 8 poles					**3300 V 50 Hz**								
160	**M3GM**	**400 LKA**	2053	1.0	2.1	0.18	315	14	20	12.6	590	2400	75
180	**M3GM**	**400 LKB**	2310	1.0	2.0	0.18	352	14	20	14.4	640	2510	75
200	**M3GM**	**400 LKC**	2566	1.0	2.1	0.17	388	14	20	16.2	690	2630	75
224	**M3GM**	**400 LKD**	2873	1.1	2.2	0.18	430	12	20	20.7	800	2900	75
250	**M3GM**	**400 LKE**	3206	1.2	2.3	0.18	476	12	20	24.3	900	3130	75
280	**M3GM**	**400 LKF**	3591	1.2	2.2	0.17	528	11	20	26.1	950	3270	75
315	**M3GM**	**400 LKG**	4041	1.2	2.2	0.17	587	11	20	27.9	990	3370	75
355	**M3GM**	**450 LA**	4548	1.2	2.2	0.16	655	12	20	34.4	1180	4270	76
400	**M3GM**	**450 LB**	5125	1.2	2.3	0.16	730	11	20	42.4	1240	4420	76
450	**M3GM**	**450 LC**	5766	1.2	2.3	0.16	811	11	20	46.8	1330	4650	76
750 r/min = 8 poles					**6600 V 50 Hz**								
160	**M3GM**	**400 LKA**	2054	1.0	2.3	0.17	315	13	20	10.8	590	2600	75
180	**M3GM**	**400 LKB**	2312	0.9	2.2	0.17	352	14	20	12.6	650	2770	75
200	**M3GM**	**400 LKC**	2568	1.0	2.3	0.16	388	13	20	14.4	710	2950	75
224	**M3GM**	**400 LKD**	2876	1.1	2.3	0.16	430	12	20	16.8	780	3180	75
250	**M3GM**	**400 LKE**	3210	1.1	2.3	0.16	476	12	20	18.0	820	3300	75
280	**M3GM**	**400 LKF**	3596	1.1	2.4	0.16	528	11	20	18.6	840	3360	75
315	**M3GM**	**450 LA**	4035	1.2	2.2	0.16	587	12	20	36.6	1120	4070	76
355	**M3GM**	**450 LB**	4548	1.2	2.2	0.16	655	12	20	34.4	1180	4230	76
400	**M3GM**	**450 LC**	5126	1.1	2.2	0.16	730	12	20	37.7	1270	4450	76

[1] **400LK:** The given values of load inertia assume three starts from cold and two starts from warm conditions in succession against quadratic load torque with 90% of the rated torque at the rated speed and at 80% of the rated voltage.

450L: The given values of load inertia assume two starts from cold and one start from warm conditions in succession against quadratic load torque with 85% of the rated torque at the rated speed and at 80% of the rated voltage.

To check validity against other starting requirements, contact ABB.

[2] **400LK:** Starting time with given values of the load inertia from cold condition in succession against quadratic load torque with 90% of the rated torque at the rated speed and at rated voltage.

450L: Starting time with given values of the load inertia from cold condition in succession against quadratic load torque with 85% of the rated torque at the rated speed and at rated voltage.

[3] The sound pressure levels are presented at no-load. Sound level values of 6…8-pole motors at no-load are typically 1...3 dB(A) higher than the corresponding values at no-load. The variation and measuring tolerance of the figures is +3 dB(A).

[4] Efficiency based on typical additional losses acc. to measurements.

HV Dust ignition proof motors Ex tD categories 2D and 3D

Technical data for totally enclosed squirrel cage three phase cast iron motors

IP 55. IP 65 - IC 411 - Insulation class F. temperature rise class B. ambient temperature 40°C

Output kW		Motor type		Product code		Speed r/min	Efficiency [4] Full load 100%	Efficiency [4] 3/4 load 75%	Power factor Full load 100%	Power factor 3/4 load 75%	Current I_N A	Current I_S/I_N	Current I_0 A
3000 r/min = 2 poles						**3000 V**	**50 Hz**						
132		**M3GM**	**315 LKA**	3GGM	311 811-•QA	2971	94.2	94.2	0.92	0.92	29	6.2	5
155		**M3GM**	**315 LKB**	3GGM	311 821-•QA	2972	94.5	94.5	0.92	0.92	34	6.5	6
200	[5]	**M3GM**	**355 LKA**	3GGM	351 811-•QA	2974	94.4	94.4	0.90	0.90	45	5.5	9
250	[5]	**M3GM**	**355 LKB**	3GGM	351 821-•QA	2975	95.0	95.0	0.90	0.90	56	6.0	11
310	[5]	**M3GM**	**355 LKC**	3GGM	351 831-•QA	2973	95.5	95.6	0.91	0.92	68	5.9	11
315	[5]	**M3GM**	**355 LKD**	3GGM	351 842-•QA	2974	95.5	95.6	0.91	0.92	69	6.3	11
345	[5]	**M3GM**	**355 LKE**	3GGM	351 851-•QA	2983	95.8	95.8	0.91	0.90	76	6.5	15
355	[5]	**M3GM**	**400 LA**	3GGM	401 511-•QA	2980	95.6	95.6	0.90	0.90	79	6.2	16
400	[5]	**M3GM**	**400 LB**	3GGM	401 521-•QA	2978	95.9	95.9	0.91	0.91	88	6.1	15
440	[5]	**M3GM**	**400 LC**	3GGM	401 532-•QA	2979	96.0	96.1	0.91	0.92	96	6.5	16
500	[5]	**M3GM**	**400 LKA**	3GGM	401 810-•QA	2983	96.3	96.4	0.91	0.91	109	6.1	19
555	[5]	**M3GM**	**400 LKB**	3GGM	401 821-•QA	2983	96.5	96.6	0.91	0.92	121	6.1	19
3000 r/min = 2 poles						**3300 V**	**50 Hz**						
160		**M3GM**	**315 LKA**	3GGM	311 811-•RA	2976	94.6	94.6	0.91	0.91	32	6.3	6
200	[5]	**M3GM**	**355 LKA**	3GGM	351 811-•RA	2977	94.5	94.3	0.89	0.89	41	6.1	9
250	[5]	**M3GM**	**355 LKB**	3GGM	351 821-•RA	2975	95.0	95.0	0.90	0.90	51	6.0	10
310	[5]	**M3GM**	**355 LKC**	3GGM	351 831-•RA	2975	95.5	95.6	0.91	0.92	62	6.4	11
330	[5]	**M3GM**	**355 LKD**	3GGM	351 842-•RA	2975	95.7	95.8	0.91	0.92	66	6.5	11
355	[5]	**M3GM**	**400 LA**	3GGM	401 511-•RA	2979	95.7	95.7	0.90	0.90	72	6.2	14
400	[5]	**M3GM**	**400 LB**	3GGM	401 521-•RA	2978	95.8	95.9	0.91	0.91	80	6.1	14
435	[5]	**M3GM**	**400 LC**	3GGM	401 532-•RA	2977	96.0	96.1	0.91	0.92	86	6.3	14
500	[5]	**M3GM**	**400 LKA**	3GGM	401 810-•RA	2982	96.3	96.4	0.91	0.92	99	5.9	16
555	[5]	**M3GM**	**400 LKB**	3GGM	401 821-•RA	2983	96.5	96.6	0.91	0.92	110	6.1	17
3000 r/min = 2 poles						**6000 V**	**50 Hz**						
250	[5]	**M3GM**	**355 LKA**	3GGM	351 811-•TA	2975	94.9	95.0	0.91	0.92	28	6.1	5
280	[5]	**M3GM**	**355 LKB**	3GGM	351 821-•TA	2982	95.3	95.3	0.91	0.90	31	6.2	6
300	[5]	**M3GM**	**355 LKC**	3GGM	351 830-•TA	2982	95.5	95.5	0.91	0.91	33	6.2	6
315	[5]	**M3GM**	**400 LA**	3GGM	401 511-•TA	2981	95.2	95.1	0.89	0.88	35	6.4	8
355	[5]	**M3GM**	**400 LB**	3GGM	401 521-•TA	2979	95.6	95.6	0.91	0.91	39	6.3	7
390	[5]	**M3GM**	**400 LC**	3GGM	401 532-•TA	2978	95.7	95.8	0.91	0.91	43	6.3	8
410	[5]	**M3GM**	**400 LD**	3GGM	401 542-•TA	2979	95.9	96.0	0.92	0.92	45	6.6	8
450	[5]	**M3GM**	**400 LKA**	3GGM	401 810-•TA	2983	96.0	96.1	0.91	0.91	49	6.0	9
500	[5]	**M3GM**	**400 LKB**	3GGM	401 820-•TA	2984	96.2	96.3	0.91	0.91	55	6.4	10
530	[5]	**M3GM**	**400 LKC**	3GGM	401 830-•TA	2984	96.3	96.4	0.92	0.92	58	6.4	10
3000 r/min = 2 poles						**6600 V**	**50 Hz**						
280	[5]	**M3GM**	**355 LKA**	3GGM	351 811-•SA	2982	95.2	95.3	0.91	0.91	28	6.1	5
315	[5]	**M3GM**	**400 LA**	3GGM	401 511-•SA	2980	95.3	95.2	0.90	0.89	32	6.4	7
355	[5]	**M3GM**	**400 LB**	3GGM	401 521-•SA	2980	95.5	95.5	0.91	0.91	36	6.3	7
395	[5]	**M3GM**	**400 LC**	3GGM	401 532-•SA	2979	95.8	95.8	0.91	0.91	39	6.5	7
415	[5]	**M3GM**	**400 LD**	3GGM	401 542-•SA	2979	95.9	96.0	0.91	0.92	41	6.6	7
450	[5]	**M3GM**	**400 LKA**	3GGM	401 810-•SA	2983	96.0	96.1	0.91	0.91	45	6.0	8
500	[5]	**M3GM**	**400 LKB**	3GGM	401 820-•SA	2984	96.2	96.3	0.91	0.91	50	6.5	9
530	[5]	**M3GM**	**400 LKC**	3GGM	401 830-•SA	2984	96.3	96.4	0.92	0.92	52	6.4	9

8

The bullet in the product code indicates choice of mounting arrangement (see ordering information page).

When ordering variant code for protection type has to be added to the product code according to needs:

452 DIP/Ex tD acc. to ATEX directive 94/9/EC, T=125°C, cat. 3D, IP55
453 DIP/Ex tD acc. to ATEX directive 94/9/EC, T=125°C, cat. 2D, IP65
454 DIP/Ex tD acc. to ATEX directive 94/9/EC, T=125°C, cat. 3D, IP65
804 DIP/Ex tD, IEC 61241, T125°C, IP55 (zone 22)
805 DIP/Ex tD, IEC 61241, T125°C, IP65 (zone 21)
806 DIP/Ex tD, IEC 61241, T125°C, IP65 (zone 22)

HV Dust ignition proof motors Ex tD categories 2D and 3D

Technical data for totally enclosed squirrel cage three phase cast iron motors

IP 55. IP 65 - IC 411 - Insulation class F. temperature rise class B. ambient temperature 40°C

Output kW		Motor type		Torque T_N Nm	T_S/T_N	T_{max}/T_N	Power factor cos ϕ_k	Load inertia [1] kgm²	Starting time cold [2] s	Maximum stalling time hot s	Rotor inertia kgm²	Rotor weight kg	Motor weight kg	Sound pressure level L_p [3] dB(A)
3000 r/min = 2 poles							**3000 V 50 Hz**							
132		**M3GM**	**315 LKA**	424	1.2	2.6	0.17	10	8	16	2.0	230	1230	78
155		**M3GM**	**315 LKB**	498	1.3	2.8	0.17	12	7	16	2.1	240	1260	78
200	[5]	**M3GM**	**355 LKA**	642	0.8	2.4	0.13	15	11	22	2.9	280	1680	78
250	[5]	**M3GM**	**355 LKB**	803	0.9	2.6	0.13	18	9	16	3.2	300	1780	78
310	[5]	**M3GM**	**355 LKC**	996	1.0	2.5	0.13	22	8	16	4.5	390	2150	78
315	[5]	**M3GM**	**355 LKD**	1011	1.1	2.6	0.14	22	7	14	4.2	420	2240	78
345	[5]	**M3GM**	**355 LKE**	1104	1.0	2.7	0.13	24	8	14	4.1	400	2220	78
355	[5]	**M3GM**	**400 LA**	1138	0.9	2.6	0.13	24	9	20	6.9	460	2410	79
400	[5]	**M3GM**	**400 LB**	1283	1.0	2.5	0.14	27	9	20	8.0	520	2660	79
440	[5]	**M3GM**	**400 LC**	1411	1.1	2.6	0.14	29	7	16	7.8	580	2900	79
500	[5]	**M3GM**	**400 LKA**	1601	0.8	2.6	0.11	32	9	16	8.8	560	2980	79
555	[5]	**M3GM**	**400 LKB**	1777	0.8	2.6	0.11	35	9	14	8.4	620	3220	79
3000 r/min = 2 poles							**3300 V 50 Hz**							
160		**M3GM**	**315 LKA**	513	0.9	2.8	0.14	12	8	16	1.9	210	1180	78
200	[5]	**M3GM**	**355 LKA**	641	0.8	2.7	0.13	15	10	20	2.9	280	1670	78
250	[5]	**M3GM**	**355 LKB**	803	0.9	2.6	0.13	18	9	16	3.2	300	1770	78
310	[5]	**M3GM**	**355 LKC**	995	1.1	2.7	0.14	22	7	15	4.5	390	2140	78
330	[5]	**M3GM**	**355 LKD**	1059	1.1	2.7	0.13	23	7	13	4.2	420	2250	78
355	[5]	**M3GM**	**400 LA**	1138	0.9	2.6	0.13	24	9	20	6.9	460	2430	79
400	[5]	**M3GM**	**400 LB**	1283	1.0	2.5	0.13	27	9	20	8.0	520	2650	79
435	[5]	**M3GM**	**400 LC**	1395	1.1	2.5	0.14	29	8	16	7.8	580	2900	79
500	[5]	**M3GM**	**400 LKA**	1601	0.8	2.5	0.11	32	10	16	9.4	590	3090	79
555	[5]	**M3GM**	**400 LKB**	1777	0.8	2.6	0.11	35	9	14	8.4	620	3210	79
3000 r/min = 2 poles							**6000 V 50 Hz**							
250	[5]	**M3GM**	**355 LKA**	803	1.0	2.5	0.14	18	9	16	4.2	370	2010	78
280	[5]	**M3GM**	**355 LKB**	897	0.9	2.6	0.13	20	9	18	4.1	350	2000	78
300	[5]	**M3GM**	**355 LKC**	961	0.9	2.6	0.13	21	9	18	4.4	370	2090	78
315	[5]	**M3GM**	**400 LA**	1009	0.9	2.7	0.14	22	9	20	6.4	430	2260	79
355	[5]	**M3GM**	**400 LB**	1138	1.0	2.6	0.14	24	9	20	7.5	490	2510	79
390	[5]	**M3GM**	**400 LC**	1250	1.0	2.6	0.14	26	8	17	6.7	520	2630	79
410	[5]	**M3GM**	**400 LD**	1314	1.1	2.6	0.14	28	8	17	7.5	570	2810	79
450	[5]	**M3GM**	**400 LKA**	1441	0.8	2.6	0.12	30	10	16	8.3	530	2820	79
500	[5]	**M3GM**	**400 LKB**	1600	0.8	2.7	0.12	32	9	16	9.4	590	3050	79
530	[5]	**M3GM**	**400 LKC**	1696	0.9	2.7	0.12	34	9	16	9.9	620	3170	79
3000 r/min = 2 poles							**6600 V 50 Hz**							
280	[5]	**M3GM**	**355 LKA**	897	0.9	2.6	0.14	19	10	16	4.4	370	2080	78
315	[5]	**M3GM**	**400 LA**	1009	1.0	2.7	0.14	22	9	20	6.4	430	2270	79
355	[5]	**M3GM**	**400 LB**	1138	1.0	2.6	0.14	24	9	20	7.5	490	2500	79
395	[5]	**M3GM**	**400 LC**	1266	1.1	2.6	0.14	27	8	16	6.7	520	2630	79
415	[5]	**M3GM**	**400 LD**	1330	1.2	2.6	0.15	28	8	17	7.5	570	2810	79
450	[5]	**M3GM**	**400 LKA**	1441	0.8	2.6	0.12	30	10	16	8.6	550	2880	79
500	[5]	**M3GM**	**400 LKB**	1600	0.9	2.7	0.12	32	9	16	9.4	590	3050	79
530	[5]	**M3GM**	**400 LKC**	1696	0.9	2.7	0.12	34	9	16	9.9	620	3170	79

8

[1] **315LK, 355LK, 400L:** The given values of load inertia assume two starts from cold and one start from warm conditions in succession against quadratic load torque with 90% of the rated torque at the rated speed and at 80% of the rated voltage.
400LK: The given values of load inertia assume two starts from cold and one start from warm conditions in succession against quadratic load torque with 85% of the rated torque at the rated speed and at 80% of the rated voltage.
To check validity against other starting requirements, contact ABB.

[2] **315LK, 355LK, 400L:** Starting time with given values of the load inertia from cold condition in succession against quadratic load torque with 90% of the rated torque at the rated speed and at rated voltage.
400LK: Starting time with given values of the load inertia from cold condition in succession against quadratic load torque with 85% of the rated torque at the rated speed and at rated voltage.

[3] The sound pressure levels are presented at no-load. The magnetic noise level of 2- and 4-pole motors is typically low compared to the fan noise, resulting no increase in the noise level on-load. The variation and measuring tolerance of the figures is +3 dB(A).

[4] Efficiency based on typical additional losses acc. to measurements.

[5] Unidirectional fan construction as standard. Direction of rotation must be stated when ordering, see variant codes 044 and 045.

HV Dust ignition proof motors Ex tD categories 2D and 3D

Technical data for totally enclosed squirrel cage three phase cast iron motors

IP 55. IP 65 - IC 411 - Insulation class F. temperature rise class B. ambient temperature 40°C

Output kW	Motor type		Product code		Speed r/min	Efficiency [4] Full load 100%	Efficiency 3/4 load 75%	Power factor Full load 100%	Power factor 3/4 load 75%	Current I_N A	Current I_S/I_N	Current I_0 A
1500 r/min = 4 poles					**3000 V 50 Hz**							
110	**M3GM**	**315 LKA**	3GGM	312 811-•QA	1488	94.3	94.1	0.84	0.80	27	6.2	10
132	**M3GM**	**315 LKB**	3GGM	312 821-•QA	1484	94.3	94.4	0.85	0.83	32	5.3	10
160	**M3GM**	**315 LKC**	3GGM	312 831-•QA	1485	94.6	94.6	0.87	0.85	37	6.2	11
200	**M3GM**	**315 LKD**	3GGM	312 841-•QA	1485	94.8	94.9	0.87	0.85	46	6.0	14
250	**M3GM**	**355 LKA**	3GGM	352 811-•QA	1490	95.3	95.2	0.84	0.80	60	6.2	22
315	**M3GM**	**355 LKB**	3GGM	352 821-•QA	1489	95.5	95.5	0.84	0.82	75	6.0	25
355	**M3GM**	**355 LKC**	3GGM	352 831-•QA	1488	95.7	95.8	0.85	0.82	84	6.0	27
400	**M3GM**	**355 LKD**	3GGM	352 841-•QA	1489	96.0	96.0	0.86	0.84	93	5.8	29
450	**M3GM**	**400 LA**	3GGM	402 511-•QA	1490	96.4	96.5	0.86	0.84	105	6.4	32
490	**M3GM**	**400 LB**	3GGM	402 521-•QA	1489	96.1	96.1	0.85	0.83	115	6.4	35
560	**M3GM**	**400 LKA**	3GGM	402 810-•QA	1491	96.4	96.4	0.85	0.83	131	6.0	43
600	**M3GM**	**400 LKB**	3GGM	402 820-•QA	1491	96.5	96.4	0.85	0.82	140	6.4	48
710	**M3GM**	**450 LA**	3GGM	452 510-•QA	1493	96.6	96.6	0.88	0.86	161	6.4	44
735	**M3GM**	**450 LB**	3GGM	452 521-•QA	1492	96.6	96.6	0.88	0.86	166	6.2	44
1500 r/min = 4 poles					**3300 V 50 Hz**							
132	**M3GM**	**315 LKA**	3GGM	312 811-•RA	1488	94.5	94.3	0.82	0.77	30	6.2	13
160	**M3GM**	**315 LKB**	3GGM	312 821-•RA	1484	94.7	94.8	0.84	0.82	35	5.5	12
200	**M3GM**	**315 LKC**	3GGM	312 831-•RA	1485	94.8	94.9	0.87	0.85	42	6.1	13
250	**M3GM**	**355 LKA**	3GGM	352 811-•RA	1489	95.3	95.2	0.84	0.81	55	6.0	19
315	**M3GM**	**355 LKB**	3GGM	352 821-•RA	1490	95.4	95.4	0.83	0.80	69	6.4	26
355	**M3GM**	**355 LKC**	3GGM	352 831-•RA	1489	95.7	95.7	0.84	0.81	77	6.4	27
400	**M3GM**	**355 LKD**	3GGM	352 841-•RA	1490	95.9	95.9	0.86	0.83	85	6.0	28
440	**M3GM**	**400 LA**	3GGM	402 511-•RA	1489	96.4	96.4	0.85	0.84	93	6.2	28
495	**M3GM**	**400 LB**	3GGM	402 521-•RA	1490	96.1	96.1	0.85	0.83	106	6.5	34
560	**M3GM**	**400 LKA**	3GGM	402 810-•RA	1491	96.4	96.4	0.85	0.83	119	6.0	39
600	**M3GM**	**400 LKB**	3GGM	402 820-•RA	1491	96.5	96.4	0.85	0.83	127	6.3	43
630	**M3GM**	**450 LA**	3GGM	452 510-•RA	1493	96.5	96.4	0.88	0.86	130	6.3	36
710	**M3GM**	**450 LB**	3GGM	452 520-•RA	1492	96.6	96.6	0.88	0.86	146	6.3	39
1500 r/min = 4 poles					**6000 V 50 Hz**							
250	**M3GM**	**355 LKA**	3GGM	352 811-•TA	1486	95.2	95.3	0.84	0.81	30	5.8	10
315	**M3GM**	**355 LKB**	3GGM	352 821-•TA	1489	95.7	95.7	0.83	0.79	38	6.4	15
355	**M3GM**	**400 LA**	3GGM	402 511-•TA	1489	95.9	96.0	0.85	0.84	42	6.2	13
400	**M3GM**	**400 LB**	3GGM	402 521-•TA	1489	96.1	96.2	0.86	0.84	47	6.4	14
450	**M3GM**	**400 LC**	3GGM	402 531-•TA	1489	95.9	96.0	0.86	0.85	52	6.3	15
500	**M3GM**	**400 LKA**	3GGM	402 810-•TA	1491	96.2	96.2	0.85	0.83	58	5.9	19
560	**M3GM**	**400 LKB**	3GGM	402 820-•TA	1491	96.3	96.3	0.86	0.84	65	5.9	20
600	**M3GM**	**400 LKC**	3GGM	402 830-•TA	1492	96.4	96.4	0.85	0.82	70	6.4	24
630	**M3GM**	**450 LA**	3GGM	452 510-•TA	1493	96.4	96.4	0.87	0.85	72	6.5	21
710	**M3GM**	**450 LB**	3GGM	452 520-•TA	1493	96.6	96.5	0.88	0.86	80	6.4	22
1500 r/min = 4 poles					**6600 V 50 Hz**							
250	**M3GM**	**355 LKA**	3GGM	352 811-•SA	1488	95.3	95.3	0.83	0.80	28	6.2	11
315	**M3GM**	**355 LKB**	3GGM	352 821-•SA	1487	95.6	95.7	0.84	0.81	34	6.3	12
355	**M3GM**	**400 LA**	3GGM	402 511-•SA	1489	95.9	96.0	0.86	0.84	38	6.1	11
400	**M3GM**	**400 LB**	3GGM	402 521-•SA	1489	96.0	96.1	0.86	0.84	42	6.3	13
450	**M3GM**	**400 LC**	3GGM	402 531-•SA	1489	96.0	95.9	0.86	0.84	48	6.5	14
500	**M3GM**	**400 LKA**	3GGM	402 810-•SA	1491	96.2	96.1	0.85	0.83	53	6.0	18
560	**M3GM**	**400 LKB**	3GGM	402 820-•SA	1491	96.3	96.3	0.86	0.84	59	5.9	18
600	**M3GM**	**400 LKC**	3GGM	402 830-•SA	1491	96.4	96.4	0.85	0.83	64	6.3	21
630	**M3GM**	**450 LA**	3GGM	452 510-•SA	1493	96.4	96.3	0.87	0.85	65	6.5	19
710	**M3GM**	**450 LB**	3GGM	452 520-•SA	1492	96.6	96.5	0.88	0.86	73	6.3	20

8

The bullet in the product code indicates choice of mounting arrangement (see ordering information page).

When ordering variant code for protection type has to be added to the product code according to needs:

452 DIP/Ex tD acc. to ATEX directive 94/9/EC, T=125°C, cat. 3D, IP55
453 DIP/Ex tD acc. to ATEX directive 94/9/EC, T=125°C, cat. 2D, IP65
454 DIP/Ex tD acc. to ATEX directive 94/9/EC, T=125°C, cat. 3D, IP65
804 DIP/Ex tD, IEC 61241, T125°C, IP55 (zone 22)
805 DIP/Ex tD, IEC 61241, T125°C, IP65 (zone 21)
806 DIP/Ex tD, IEC 61241, T125°C, IP65 (zone 22)

HV Dust ignition proof motors Ex tD categories 2D and 3D

Technical data for totally enclosed squirrel cage three phase cast iron motors

IP 55. IP 65 - IC 411 - Insulation class F. temperature rise class B. ambient temperature 40°C

Output kW	Motor type		Torque T_N Nm	T_S/T_N	T_{max}/T_N	Power factor cos ϕ_k	Load inertia [1] kgm²	Starting time cold [2] s	Maximum stalling time hot s	Rotor inertia kgm²	Rotor weight kg	Motor weight kg	Sound pressure level L_p [3] dB(A)
1500 r/min = 4 poles						**3000 V**	**50 Hz**						
110	**M3GM**	**315 LKA**	706	1.6	2.6	0.21	41	7	20	1.9	220	1180	73
132	**M3GM**	**315 LKB**	849	1.3	2.1	0.21	49	9	20	1.9	220	1180	73
160	**M3GM**	**315 LKC**	1029	1.6	2.4	0.21	58	7	16	2.8	260	1180	73
200	**M3GM**	**315 LKD**	1286	1.0	2.7	0.15	71	8	15	2.9	270	1210	73
250	**M3GM**	**355 LKA**	1603	1.3	2.5	0.17	87	8	18	5.5	400	1850	74
315	**M3GM**	**355 LKB**	2021	1.3	2.4	0.17	107	8	16	6.3	450	1980	74
355	**M3GM**	**355 LKC**	2278	1.4	2.3	0.17	119	8	14	6.8	480	2080	74
400	**M3GM**	**355 LKD**	2565	0.9	2.4	0.13	132	9	16	8.1	540	2260	74
450	**M3GM**	**400 LA**	2885	1.5	2.3	0.16	147	7	12	12.1	660	2870	74
490	**M3GM**	**400 LB**	3141	1.5	2.3	0.16	158	7	12	12.1	660	2860	79
560	**M3GM**	**400 LKA**	3587	1.0	2.5	0.12	177	9	14	13.7	730	3200	79
600	**M3GM**	**400 LKB**	3842	1.1	2.7	0.12	188	8	12	14.9	790	3380	79
710	**M3GM**	**450 LA**	4542	0.8	2.6	0.10	217	10	20	25.6	1050	4570	83
735	**M3GM**	**450 LB**	4704	0.8	2.5	0.10	224	11	22	22.9	1060	4580	83
1500 r/min = 4 poles						**3300 V**	**50 Hz**						
132	**M3GM**	**315 LKA**	847	1.7	2.6	0.21	49	7	20	1.9	220	1180	73
160	**M3GM**	**315 LKB**	1029	1.4	2.2	0.21	58	8	20	2.1	240	1250	73
200	**M3GM**	**315 LKC**	1286	1.0	2.7	0.15	71	8	15	2.9	270	1210	73
250	**M3GM**	**355 LKA**	1603	1.3	2.4	0.17	87	8	20	5.5	400	1850	74
315	**M3GM**	**355 LKB**	2019	1.4	2.5	0.17	107	7	16	6.3	450	1970	74
355	**M3GM**	**355 LKC**	2277	1.4	2.5	0.17	119	7	14	6.8	480	2070	74
400	**M3GM**	**355 LKD**	2564	1.0	2.5	0.13	132	9	16	8.1	540	2250	74
440	**M3GM**	**400 LA**	2822	1.4	2.3	0.16	144	7	12	11.3	620	2770	74
495	**M3GM**	**400 LB**	3173	1.5	2.4	0.16	159	7	11	12.1	660	2860	79
560	**M3GM**	**400 LKA**	3587	1.0	2.5	0.12	177	9	14	13.7	730	3200	79
600	**M3GM**	**400 LKB**	3842	1.0	2.6	0.12	188	8	12	14.9	790	3370	79
630	**M3GM**	**450 LA**	4031	0.8	2.5	0.10	196	11	20	23.5	980	4340	83
710	**M3GM**	**450 LB**	4543	0.8	2.5	0.10	217	11	20	25.6	1050	4570	83
1500 r/min = 4 poles						**6000 V**	**50 Hz**						
250	**M3GM**	**355 LKA**	1606	1.2	2.3	0.17	87	8	20	4.1	380	2010	74
315	**M3GM**	**355 LKB**	2021	1.1	2.7	0.14	107	8	20	4.8	420	2200	74
355	**M3GM**	**400 LA**	2277	1.4	2.3	0.17	119	7	17	10.8	600	2600	74
400	**M3GM**	**400 LB**	2565	1.5	2.4	0.17	132	7	14	11.6	640	2730	74
450	**M3GM**	**400 LC**	2887	1.5	2.3	0.17	147	7	12	12.4	670	2840	79
500	**M3GM**	**400 LKA**	3203	1.0	2.5	0.13	161	9	16	12.9	700	3050	79
560	**M3GM**	**400 LKB**	3588	1.0	2.5	0.13	177	9	14	14.1	750	3220	79
600	**M3GM**	**400 LKC**	3841	1.1	2.7	0.12	188	8	12	14.9	790	3340	79
630	**M3GM**	**450 LA**	4030	0.8	2.6	0.10	196	10	20	22.8	960	4240	83
710	**M3GM**	**450 LB**	4543	0.8	2.6	0.10	217	10	20	25.6	1050	4540	83
1500 r/min = 4 poles						**6600 V**	**50 Hz**						
250	**M3GM**	**355 LKA**	1605	1.4	2.5	0.17	87	7	20	4.1	380	2010	74
315	**M3GM**	**355 LKB**	2023	1.4	2.5	0.17	107	7	20	5.0	440	2280	74
355	**M3GM**	**400 LA**	2277	1.4	2.3	0.17	119	7	17	10.8	600	2600	74
400	**M3GM**	**400 LB**	2566	1.5	2.3	0.17	132	7	14	11.6	640	2710	74
450	**M3GM**	**400 LC**	2886	1.6	2.4	0.17	147	6	12	12.4	670	2840	79
500	**M3GM**	**400 LKA**	3202	1.0	2.6	0.13	161	9	15	12.9	700	3040	79
560	**M3GM**	**400 LKB**	3588	1.0	2.5	0.13	177	9	14	14.1	750	3220	79
600	**M3GM**	**400 LKC**	3842	1.0	2.6	0.13	188	8	12	14.9	790	3330	79
630	**M3GM**	**450 LA**	4030	0.8	2.6	0.10	196	10	20	22.8	960	4230	83
710	**M3GM**	**450 LB**	4543	0.8	2.4	0.10	217	11	20	25.6	1050	4530	83

[1] The given values of load inertia assume three starts from cold and two starts from warm conditions in succession against quadratic load torque with 90% of the rated torque at the rated speed and at 80% of the rated voltage.
To check validity against other starting requirements, contact ABB.

[2] Starting time with given values of the load inertia from cold condition in succession against quadratic load torque with 90% of the rated torque at the rated speed and at rated voltage.

[3] The sound pressure levels are presented at no-load. The magnetic noise level of 2- and 4-pole motors is typically low compared to the fan noise, resulting no increase in the noise level on-load. The variation and measuring tolerance of the figures is +3 dB(A).

[4] Efficiency based on typical additional losses acc. to measurements.

8

HV Dust ignition proof motors Ex tD categories 2D and 3D

Technical data for totally enclosed squirrel cage three phase cast iron motors

IP 55. IP 65 - IC 411 - Insulation class F. temperature rise class B. ambient temperature 40°C

Output kW	Motor type		Product code		Speed r/min	Efficiency [4] Full load 100%	Efficiency 3/4 load 75%	Power factor Full load 100%	Power factor 3/4 load 75%	Current I_N A	Current I_S/I_N	Current I_0 A
1000 r/min = 6 poles					**3000 V 50 Hz**							
110	**M3GM**	**315 LKA**	3GGM	313 811-•QA	987	93.9	94.3	0.80	0.77	28	5.3	11
132	**M3GM**	**315 LKB**	3GGM	313 821-•QA	986	94.3	94.6	0.80	0.77	33	5.4	13
150	**M3GM**	**315 LKC**	3GGM	313 831-•QA	991	94.8	94.8	0.76	0.69	40	6.2	21
160	**M3GM**	**355 LKA**	3GGM	353 811-•QA	992	94.9	94.9	0.75	0.70	43	5.5	21
200	**M3GM**	**355 LKB**	3GGM	353 821-•QA	990	95.3	95.4	0.79	0.75	51	5.3	21
250	**M3GM**	**355 LKC**	3GGM	353 831-•QA	991	95.6	95.7	0.79	0.75	64	5.5	27
315	**M3GM**	**400 L**	3GGM	403 501-•QA	991	95.7	95.9	0.82	0.79	77	6.0	28
355	**M3GM**	**400 LA**	3GGM	403 511-•QA	991	95.9	96.1	0.82	0.80	86	5.9	30
400	**M3GM**	**400 LB**	3GGM	403 521-•QA	991	96.1	96.3	0.82	0.80	97	6.2	34
450	**M3GM**	**400 LKA**	3GGM	403 811-•QA	994	96.2	96.2	0.79	0.75	113	6.0	48
500	**M3GM**	**400 LKB**	3GGM	403 821-•QA	994	96.3	96.4	0.81	0.77	123	5.8	48
520	**M3GM**	**400 LKC**	3GGM	403 831-•QA	995	96.4	96.3	0.78	0.73	133	6.6	62
560	**M3GM**	**450 LA**	3GGM	453 510-•QA	994	96.4	96.5	0.84	0.81	133	5.9	46
630	**M3GM**	**450 LB**	3GGM	453 520-•QA	994	96.6	96.6	0.84	0.81	149	6.3	52
695	**M3GM**	**450 LC**	3GGM	453 531-•QA	995	96.7	96.7	0.84	0.81	164	6.6	60
1000 r/min = 6 poles					**3300 V 50 Hz**							
112	**M3GM**	**315 LKA**	3GGM	313 811-•RA	991	94.4	94.5	0.79	0.74	26	5.7	12
132	**M3GM**	**315 LKB**	3GGM	313 821-•RA	987	94.3	94.6	0.80	0.76	31	5.6	13
150	**M3GM**	**315 LKC**	3GGM	313 831-•RA	991	94.8	94.8	0.76	0.69	36	6.2	19
160	**M3GM**	**355 LKA**	3GGM	353 811-•RA	992	94.9	94.8	0.75	0.69	39	5.7	20
200	**M3GM**	**355 LKB**	3GGM	353 821-•RA	990	95.3	95.4	0.79	0.75	46	5.3	19
250	**M3GM**	**355 LKC**	3GGM	353 831-•RA	990	95.5	95.7	0.80	0.76	57	5.3	23
310	**M3GM**	**400 L**	3GGM	403 502-•RA	990	95.7	95.9	0.82	0.79	69	5.8	24
345	**M3GM**	**400 LA**	3GGM	403 512-•RA	991	95.9	96.0	0.82	0.79	77	6.2	27
390	**M3GM**	**400 LB**	3GGM	403 521-•RA	991	96.0	96.2	0.82	0.80	86	6.2	30
450	**M3GM**	**400 LKA**	3GGM	403 811-•RA	994	96.2	96.3	0.80	0.76	102	5.9	41
490	**M3GM**	**400 LKB**	3GGM	403 821-•RA	994	96.3	96.3	0.81	0.77	110	5.9	44
530	**M3GM**	**400 LKC**	3GGM	403 831-•RA	994	96.4	96.4	0.79	0.74	122	6.4	54
560	**M3GM**	**450 LA**	3GGM	453 510-•RA	994	96.4	96.5	0.84	0.82	120	6.0	41
630	**M3GM**	**450 LB**	3GGM	453 520-•RA	995	96.6	96.6	0.84	0.81	135	6.4	48
695	**M3GM**	**450 LC**	3GGM	453 531-•RA	995	96.7	96.7	0.84	0.81	150	6.6	54
1000 r/min = 6 poles					**6000 V 50 Hz**							
220	**M3GM**	**355 LKA**	3GGM	353 811-•TA	992	95.2	95.3	0.80	0.76	28	6.3	12
250	**M3GM**	**355 LKB**	3GGM	353 821-•TA	992	95.3	95.5	0.81	0.78	31	5.7	12
280	**M3GM**	**400 L**	3GGM	403 501-•TA	991	95.7	95.8	0.80	0.76	35	5.6	14
315	**M3GM**	**400 LA**	3GGM	403 511-•TA	992	95.9	95.9	0.80	0.76	40	5.8	16
350	**M3GM**	**400 LB**	3GGM	403 521-•TA	991	96.0	96.1	0.80	0.77	44	5.7	17
400	**M3GM**	**400 LKA**	3GGM	403 811-•TA	993	96.1	96.1	0.81	0.77	50	5.5	19
450	**M3GM**	**400 LKC**	3GGM	403 831-•TA	993	96.3	96.2	0.80	0.76	56	6.0	23
500	**M3GM**	**450 LA**	3GGM	453 510-•TA	995	96.3	96.3	0.83	0.80	60	6.3	22
560	**M3GM**	**450 LB**	3GGM	453 520-•TA	995	96.4	96.5	0.84	0.81	66	6.3	23
630	**M3GM**	**450 LC**	3GGM	453 530-•TA	994	96.5	96.6	0.84	0.81	75	6.3	26
650	**M3GM**	**450 LD**	3GGM	453 540-•TA	994	96.6	96.6	0.85	0.82	76	6.4	26
1000 r/min = 6 poles					**6600 V 50 Hz**							
250	**M3GM**	**355 LKA**	3GGM	353 811-•SA	994	95.5	95.5	0.79	0.74	29	6.5	13
280	**M3GM**	**400 L**	3GGM	403 501-•SA	991	95.6	95.7	0.79	0.75	32	5.6	13
315	**M3GM**	**400 LA**	3GGM	403 511-•SA	992	95.9	95.9	0.79	0.75	36	6.1	16
355	**M3GM**	**400 LB**	3GGM	403 521-•SA	991	96.0	96.0	0.80	0.76	40	5.8	16
400	**M3GM**	**400 LKA**	3GGM	403 811-•SA	993	96.1	96.1	0.80	0.77	45	5.7	18
450	**M3GM**	**400 LKC**	3GGM	403 831-•SA	993	96.2	96.2	0.80	0.76	51	6.0	21
500	**M3GM**	**450 LA**	3GGM	453 510-•SA	994	96.3	96.3	0.84	0.82	54	6.0	18
560	**M3GM**	**450 LB**	3GGM	453 520-•SA	994	96.4	96.5	0.85	0.82	60	6.1	20
630	**M3GM**	**450 LC**	3GGM	453 530-•SA	994	96.5	96.6	0.85	0.83	67	6.1	22

The bullet in the product code indicates choice of mounting arrangement (see ordering information page).

When ordering variant code for protection type has to be added to the product code according to needs:

452 DIP/Ex tD acc. to ATEX directive 94/9/EC, T=125°C, cat. 3D, IP55
453 DIP/Ex tD acc. to ATEX directive 94/9/EC, T=125°C, cat. 2D, IP65
454 DIP/Ex tD acc. to ATEX directive 94/9/EC, T=125°C, cat. 3D, IP65
804 DIP/Ex tD, IEC 61241, T125°C, IP55 (zone 22)
805 DIP/Ex tD, IEC 61241, T125°C, IP65 (zone 21)
806 DIP/Ex tD, IEC 61241, T125°C, IP65 (zone 22)

HV Dust ignition proof motors Ex tD categories 2D and 3D

Technical data for totally enclosed squirrel cage three phase cast iron motors

IP 55. IP 65 - IC 411 - Insulation class F. temperature rise class B. ambient temperature 40°C

Output kW	Motor type		Torque T_N Nm	T_S/T_N	T_{max}/T_N	Power factor cos ϕ_K	Load inertia [1] kgm²	Starting time cold [2] s	Maximum stalling time hot s	Rotor inertia kgm²	Rotor weight kg	Motor weight kg	Sound pressure level L_P [3] dB(A)
1000 r/min = 6 poles						**3000 V 50 Hz**							
110	**M3GM**	**315 LKA**	1065	1.5	2.2	0.23	111	9	20	2.8	270	1170	65
132	**M3GM**	**315 LKB**	1278	1.6	2.3	0.22	131	8	20	3.2	290	1240	65
150	**M3GM**	**315 LKC**	1445	1.4	2.9	0.17	148	8	16	3.3	300	1270	65
160	**M3GM**	**355 LKA**	1541	1.4	2.4	0.19	157	9	20	4.6	350	1660	70
200	**M3GM**	**355 LKB**	1928	1.4	2.2	0.19	192	9	20	5.7	410	1850	70
250	**M3GM**	**355 LKC**	2410	1.5	2.2	0.19	236	8	20	6.9	480	2030	70
315	**M3GM**	**400 L**	3036	1.6	2.2	0.18	291	8	18	14.6	670	2500	75
355	**M3GM**	**400 LA**	3422	1.6	2.2	0.18	324	8	18	17.4	770	2730	75
400	**M3GM**	**400 LB**	3854	1.7	2.3	0.18	360	7	18	20.1	870	2970	75
450	**M3GM**	**400 LKA**	4323	1.2	2.5	0.14	400	9	22	17.9	870	3090	78
500	**M3GM**	**400 LKB**	4806	1.2	2.4	0.13	439	9	22	20.5	960	3330	78
520	**M3GM**	**400 LKC**	4993	1.4	2.7	0.13	455	7	21	21.1	980	3380	78
560	**M3GM**	**450 LA**	5379	1.1	2.5	0.14	486	10	20	29.2	1040	3990	78
630	**M3GM**	**450 LB**	6049	1.2	2.6	0.14	539	9	20	34.5	1190	4360	78
695	**M3GM**	**450 LC**	6673	1.3	2.6	0.14	587	8	22	34.0	1250	4510	78
1000 r/min = 6 poles						**3300 V 50 Hz**							
112	**M3GM**	**315 LKA**	1080	1.2	2.6	0.18	113	9	20	3.0	280	1200	65
132	**M3GM**	**315 LKB**	1277	1.6	2.3	0.22	131	8	20	3.2	290	1240	65
150	**M3GM**	**315 LKC**	1445	1.4	2.9	0.17	148	8	16	3.3	300	1270	65
160	**M3GM**	**355 LKA**	1540	1.5	2.4	0.19	157	8	20	4.6	350	1660	70
200	**M3GM**	**355 LKB**	1928	1.4	2.2	0.19	192	9	20	5.7	410	1850	70
250	**M3GM**	**355 LKC**	2412	1.4	2.1	0.19	236	9	20	6.9	480	2030	70
310	**M3GM**	**400 L**	2989	1.5	2.2	0.18	286	8	22	13.3	680	2500	75
345	**M3GM**	**400 LA**	3324	1.7	2.3	0.18	315	7	22	16.0	780	2730	75
390	**M3GM**	**400 LB**	3758	1.7	2.3	0.18	352	7	18	20.1	870	2960	75
450	**M3GM**	**400 LKA**	4324	1.2	2.4	0.14	400	9	22	18.5	890	3160	78
490	**M3GM**	**400 LKB**	4709	1.2	2.4	0.14	432	9	22	20.5	960	3310	78
530	**M3GM**	**400 LKC**	5090	1.3	2.7	0.13	463	8	20	21.1	980	3390	78
560	**M3GM**	**450 LA**	5379	1.1	2.5	0.14	486	10	20	30.3	1070	4060	78
630	**M3GM**	**450 LB**	6049	1.2	2.6	0.14	539	9	20	34.5	1190	4360	78
695	**M3GM**	**450 LC**	6673	1.3	2.6	0.14	857	8	22	34.0	1250	4510	78
1000 r/min = 6 poles						**6000 V 50 Hz**							
220	**M3GM**	**355 LKA**	2118	1.7	2.5	0.21	210	7	16	8.1	540	2170	70
250	**M3GM**	**355 LKB**	2406	1.0	2.4	0.16	203	9	14	8.0	530	2150	70
280	**M3GM**	**400 L**	2697	1.3	2.2	0.16	261	9	20	10.5	590	2530	75
315	**M3GM**	**400 LA**	3033	1.4	2.3	0.16	291	8	20	11.8	640	2710	75
350	**M3GM**	**400 LB**	3372	1.4	2.2	0.16	319	8	20	12.7	680	2830	75
400	**M3GM**	**400 LKA**	3848	0.9	2.4	0.11	360	11	22	11.9	730	3090	78
450	**M3GM**	**400 LKC**	4326	1.0	2.6	0.11	400	10	22	14.0	820	3380	78
500	**M3GM**	**450 LA**	4801	1.2	2.6	0.14	439	9	20	28.2	1010	3880	78
560	**M3GM**	**450 LB**	5377	1.2	2.6	0.14	486	9	20	32.4	1130	4180	78
630	**M3GM**	**450 LC**	6050	1.4	2.5	0.16	539	7	20	37.2	1260	4480	78
650	**M3GM**	**450 LD**	6242	1.2	2.6	0.14	554	9	20	36.7	1250	4480	78
1000 r/min = 6 poles						**6600 V 50 Hz**							
250	**M3GM**	**355 LKA**	2403	1.3	2.8	0.16	236	8	13	8.3	540	2200	70
280	**M3GM**	**400 L**	2697	1.3	2.2	0.17	261	9	20	10.1	570	2470	75
315	**M3GM**	**400 LA**	3031	1.5	2.4	0.16	291	8	20	11.8	640	2710	75
355	**M3GM**	**400 LB**	3419	1.4	2.3	0.16	324	8	20	12.7	680	2830	75
400	**M3GM**	**400 LKA**	3847	0.9	2.4	0.11	360	11	22	11.9	730	3090	78
450	**M3GM**	**400 LKC**	4326	1.0	2.6	0.11	400	10	22	14.0	820	3380	78
500	**M3GM**	**450 LA**	4802	1.1	2.5	0.14	439	10	20	29.2	1040	3950	78
560	**M3GM**	**450 LB**	5379	1.1	2.5	0.14	486	9	20	32.4	1130	4170	78
630	**M3GM**	**450 LC**	6051	1.2	2.5	0.14	539	9	20	36.7	1250	4470	78

[1] The given values of load inertia assume three starts from cold and two starts from warm conditions in succession against quadratic load torque with 90% of the rated torque at the rated speed and at 80% of the rated voltage.
To check validity against other starting requirements, contact ABB.

[2] Starting time with given values of the load inertia from cold condition in succession against quadratic load torque with 90% of the rated torque at the rated speed and at rated voltage.

[3] The sound pressure levels are presented at no-load. Sound level values of 6…8-pole motors at no-load are typically 1...3 dB(A) higher than the corresponding values at no-load. The variation and measuring tolerance of the figures is +3 dB(A).

[4] Efficiency based on typical additional losses acc. to measurements.

HV Dust ignition proof motors Ex tD categories 2D and 3D

Technical data for totally enclosed squirrel cage three phase cast iron motors

IP 55. IP 65 - IC 411 - Insulation class F. temperature rise class B. ambient temperature 40°C

Output kW	Motor type		Product code		Speed r/min	Efficiency [4] Full load 100%	Efficiency [4] 3/4 load 75%	Power factor Full load 100%	Power factor 3/4 load 75%	Current I_N A	Current I_S/I_N	Current I_0 A
750 r/min = 8 poles					**3000 V 50 Hz**							
200	**M3GM**	**400 LA**	3GGM	404 511-•QA	742	94.6	94.8	0.79	0.76	51	5.2	21
220	**M3GM**	**400 LB**	3GGM	404 521-•QA	742	94.8	95.0	0.79	0.75	56	5.5	24
250	**M3GM**	**400 LC**	3GGM	404 531-•QA	742	95.0	95.2	0.80	0.77	63	5.4	25
270	**M3GM**	**400 LD**	3GGM	404 541-•QA	741	95.0	95.3	0.80	0.77	68	5.4	26
290	**M3GM**	**400 LE**	3GGM	404 551-•QA	741	95.2	95.4	0.80	0.77	73	5.5	29
315	**M3GM**	**400 LKA**	3GGM	404 810-•QA	744	95.4	95.5	0.78	0.73	82	5.2	37
355	**M3GM**	**400 LKB**	3GGM	404 820-•QA	744	95.6	95.7	0.78	0.74	91	5.1	39
370	**M3GM**	**400 LKC**	3GGM	404 831-•QA	745	95.7	95.6	0.76	0.71	97	5.6	47
400	**M3GM**	**450 LA**	3GGM	454 510-•QA	746	96.0	95.8	0.78	0.74	102	5.8	46
450	**M3GM**	**450 LB**	3GGM	454 520-•QA	746	96.1	95.9	0.78	0.73	115	6.0	53
500	**M3GM**	**450 LC**	3GGM	454 530-•QA	746	96.2	96.1	0.78	0.74	127	6.0	58
530	**M3GM**	**450 LD**	3GGM	454 540-•QA	746	96.2	96.0	0.78	0.73	135	6.1	61
750 r/min = 8 poles					**3300 V 50 Hz**							
200	**M3GM**	**400 LA**	3GGM	404 511-•RA	742	94.6	94.8	0.79	0.76	46	5.1	18
220	**M3GM**	**400 LB**	3GGM	404 521-•RA	742	94.8	95.0	0.80	0.76	51	5.2	20
250	**M3GM**	**400 LC**	3GGM	404 531-•RA	741	94.9	95.2	0.80	0.78	57	5.0	21
280	**M3GM**	**400 LD**	3GGM	404 541-•RA	741	95.1	95.4	0.80	0.77	64	5.4	25
290	**M3GM**	**400 LE**	3GGM	404 551-•RA	742	95.1	95.3	0.80	0.76	67	5.7	27
315	**M3GM**	**400 LKA**	3GGM	404 810-•RA	744	95.5	95.6	0.77	0.72	74	5.3	34
345	**M3GM**	**400 LKB**	3GGM	404 821-•RA	744	95.5	95.6	0.78	0.74	81	5.2	36
375	**M3GM**	**400 LKC**	3GGM	404 830-•RA	744	95.7	95.7	0.77	0.72	89	5.5	42
400	**M3GM**	**450 LA**	3GGM	454 510-•RA	745	96.0	95.8	0.78	0.74	93	5.8	42
450	**M3GM**	**450 LB**	3GGM	454 520-•RA	745	96.1	95.9	0.78	0.73	104	5.9	47
500	**M3GM**	**450 LC**	3GGM	454 530-•RA	745	96.2	96.1	0.79	0.75	114	5.8	49
530	**M3GM**	**450 LD**	3GGM	454 540-•RA	745	96.1	96.1	0.80	0.75	121	5.8	52
750 r/min = 8 poles					**6000 V 50 Hz**							
160	**M3GM**	**400 LA**	3GGM	404 511-•TA	741	94.1	94.2	0.76	0.71	21	5.2	10
180	**M3GM**	**400 LB**	3GGM	404 521-•TA	740	94.2	94.4	0.77	0.72	24	5.0	11
200	**M3GM**	**400 LC**	3GGM	404 531-•TA	740	94.5	94.6	0.77	0.73	26	5.1	12
220	**M3GM**	**400 LD**	3GGM	404 541-•TA	740	94.6	94.7	0.78	0.74	29	4.9	12
250	**M3GM**	**400 LE**	3GGM	404 551-•TA	740	94.8	94.9	0.77	0.72	33	5.3	15
280	**M3GM**	**400 LKA**	3GGM	404 810-•TA	743	95.3	95.3	0.77	0.72	37	5.3	17
315	**M3GM**	**400 LKB**	3GGM	404 820-•TA	743	95.4	95.4	0.76	0.71	42	5.4	20
355	**M3GM**	**450 LA**	3GGM	454 510-•TA	746	95.7	95.6	0.78	0.74	45	5.8	20
400	**M3GM**	**450 LB**	3GGM	454 520-•TA	746	95.8	95.7	0.78	0.74	51	5.8	23
450	**M3GM**	**450 LC**	3GGM	454 530-•TA	745	95.9	95.9	0.80	0.76	56	5.6	24
500	**M3GM**	**450 LD**	3GGM	454 540-•TA	745	96.1	96.0	0.80	0.76	62	5.7	26
750 r/min = 8 poles					**6600 V 50 Hz**							
160	**M3GM**	**400 LA**	3GGM	404 511-•SA	741	94.2	94.2	0.76	0.71	20	5.3	9
180	**M3GM**	**400 LB**	3GGM	404 521-•SA	741	94.3	94.3	0.76	0.70	22	5.3	11
200	**M3GM**	**400 LC**	3GGM	404 531-•SA	739	94.3	94.6	0.78	0.74	24	4.8	10
220	**M3GM**	**400 LD**	3GGM	404 541-•SA	740	94.6	94.7	0.77	0.72	26	5.2	12
250	**M3GM**	**400 LE**	3GGM	404 551-•SA	741	94.8	94.8	0.76	0.71	30	5.4	14
280	**M3GM**	**400 LKA**	3GGM	404 810-•SA	743	95.3	95.3	0.76	0.71	34	5.4	16
315	**M3GM**	**400 LKB**	3GGM	404 820-•SA	743	95.4	95.4	0.76	0.71	38	5.4	18
355	**M3GM**	**450 LA**	3GGM	454 510-•SA	745	95.7	95.6	0.79	0.75	41	5.7	18
400	**M3GM**	**450 LB**	3GGM	454 520-•SA	745	95.8	95.8	0.80	0.75	46	5.6	19
450	**M3GM**	**450 LC**	3GGM	454 530-•SA	745	95.9	95.9	0.80	0.76	51	5.5	21
500	**M3GM**	**450 LD**	3GGM	454 540-•SA	745	96.0	96.0	0.81	0.77	56	5.5	22

8

The bullet in the product code indicates choice of mounting arrangement (see ordering information page).

When ordering variant code for protection type has to be added to the product code according to needs:

452 DIP/Ex tD acc. to ATEX directive 94/9/EC, T=125°C, cat. 3D, IP55
453 DIP/Ex tD acc. to ATEX directive 94/9/EC, T=125°C, cat. 2D, IP65
454 DIP/Ex tD acc. to ATEX directive 94/9/EC, T=125°C, cat. 3D, IP65
804 DIP/Ex tD, IEC 61241, T125°C, IP55 (zone 22)
805 DIP/Ex tD, IEC 61241, T125°C, IP65 (zone 21)
806 DIP/Ex tD, IEC 61241, T125°C, IP65 (zone 22)

HV Dust ignition proof motors Ex tD categories 2D and 3D

Technical data for totally enclosed squirrel cage three phase cast iron motors

IP 55. IP 65 - IC 411 - Insulation class F. temperature rise class B. ambient temperature 40°C

Output kW	Motor type		Torque T_N Nm	T_S/T_N	T_{max}/T_N	Power factor cos ϕ_k	Load inertia [1] kgm²	Starting time cold [2] s	Maximum stalling time hot s	Rotor inertia kgm²	Rotor weight kg	Motor weight kg	Sound pressure level L_p [3] dB(A)
750 r/min = 8 poles						**3000 V 50 Hz**							
200	**M3GM**	**400 LA**	2575	1.0	2.4	0.15	388	11	22	13.6	630	2370	75
220	**M3GM**	**400 LB**	2831	1.1	2.5	0.15	423	10	22	15.0	680	2490	75
250	**M3GM**	**400 LC**	3219	1.1	2.4	0.14	476	10	22	17.7	780	2730	75
270	**M3GM**	**400 LD**	3479	1.1	2.4	0.15	510	10	22	19.1	830	2830	75
290	**M3GM**	**400 LE**	3736	1.1	2.4	0.14	545	9	22	20.5	870	2960	75
315	**M3GM**	**400 LKA**	4041	1.2	2.1	0.18	587	11	20	20.0	880	3080	75
355	**M3GM**	**400 LKB**	4557	1.1	2.1	0.17	655	12	20	22.0	950	3270	75
370	**M3GM**	**400 LKC**	4745	1.3	2.3	0.18	680	10	22	21.8	1000	3380	75
400	**M3GM**	**450 LA**	5124	1.1	2.4	0.14	730	11	20	30.8	1080	4050	76
450	**M3GM**	**450 LB**	5763	1.2	2.5	0.14	811	10	20	33.0	1140	4200	76
500	**M3GM**	**450 LC**	6404	1.2	2.5	0.14	892	10	20	37.3	1260	4500	76
530	**M3GM**	**450 LD**	6787	1.2	2.6	0.14	940	10	20	39.5	1330	4620	76
750 r/min = 8 poles						**3300 V 50 Hz**							
200	**M3GM**	**400 LA**	2576	1.0	2.3	0.15	388	11	22	13.6	630	2370	75
220	**M3GM**	**400 LB**	2833	1.0	2.4	0.15	423	10	22	15.0	680	2490	75
250	**M3GM**	**400 LC**	3224	1.0	2.2	0.15	476	11	22	17.7	780	2720	75
280	**M3GM**	**400 LD**	3607	1.1	2.4	0.14	528	10	22	19.1	830	2840	75
290	**M3GM**	**400 LE**	3734	1.2	2.5	0.15	545	9	22	20.5	870	2950	75
315	**M3GM**	**400 LKA**	4041	1.2	2.2	0.17	587	11	20	20.0	880	3100	75
345	**M3GM**	**400 LKB**	4428	1.2	2.2	0.18	638	11	22	20.5	950	3260	75
375	**M3GM**	**400 LKC**	4811	1.3	2.3	0.17	688	10	20	23.3	990	3390	75
400	**M3GM**	**450 LA**	5124	1.1	2.4	0.14	730	11	20	30.8	1080	4040	76
450	**M3GM**	**450 LB**	5764	1.1	2.5	0.14	811	10	20	33.0	1140	4190	76
500	**M3GM**	**450 LC**	6406	1.1	2.4	0.14	892	11	20	37.3	1260	4490	76
530	**M3GM**	**450 LD**	6790	1.1	2.4	0.14	940	11	20	39.5	1330	4620	76
750 r/min = 8 poles						**6000 V 50 Hz**							
160	**M3GM**	**400 LA**	2062	1.1	2.5	0.16	315	10	22	10.2	560	2400	75
180	**M3GM**	**400 LB**	2322	1.0	2.4	0.16	352	11	22	10.7	580	2460	75
200	**M3GM**	**400 LC**	2580	1.1	2.4	0.15	388	10	22	12.1	640	2640	75
220	**M3GM**	**400 LD**	2840	1.0	2.3	0.15	423	10	22	13.0	680	2760	75
250	**M3GM**	**400 LE**	3225	1.1	2.5	0.15	476	9	22	14.4	740	2930	75
280	**M3GM**	**400 LKA**	3597	1.0	2.4	0.13	528	11	20	15.0	790	3240	75
315	**M3GM**	**400 LKB**	4047	1.0	2.5	0.13	587	10	20	15.9	830	3350	75
355	**M3GM**	**450 LA**	4547	1.1	2.4	0.15	655	11	20	28.6	1020	3850	76
400	**M3GM**	**450 LB**	5124	1.1	2.4	0.15	730	10	20	30.8	1080	4000	76
450	**M3GM**	**450 LC**	5766	1.1	2.3	0.15	811	11	20	35.2	1200	4300	76
500	**M3GM**	**450 LD**	6406	1.1	2.3	0.15	892	11	20	39.5	1330	4600	76
750 r/min = 8 poles						**6600 V 50 Hz**							
160	**M3GM**	**400 LA**	2061	1.1	2.6	0.16	315	10	22	10.7	580	2450	75
180	**M3GM**	**400 LB**	2319	1.1	2.6	0.16	352	10	22	10.7	580	2460	75
200	**M3GM**	**400 LC**	2583	1.0	2.2	0.15	388	11	22	12.1	640	2630	75
220	**M3GM**	**400 LD**	2838	1.1	2.4	0.15	423	10	22	13.0	680	2750	75
250	**M3GM**	**400 LE**	3223	1.2	2.6	0.15	476	9	22	14.4	740	2930	75
280	**M3GM**	**400 LKA**	3596	1.0	2.5	0.13	528	10	20	15.0	790	3230	75
315	**M3GM**	**400 LKB**	4047	1.0	2.5	0.13	587	10	20	15.9	830	3350	75
355	**M3GM**	**450 LA**	4548	1.1	2.4	0.15	655	12	20	29.7	1050	3920	76
400	**M3GM**	**450 LB**	5125	1.1	2.3	0.15	730	11	20	31.9	1110	4070	76
450	**M3GM**	**450 LC**	5767	1.1	2.3	0.15	811	12	20	35.2	1200	4300	76
500	**M3GM**	**450 LD**	6408	1.0	2.2	0.15	892	12	20	39.5	1330	4590	76

8

[1] The given values of load inertia assume three starts from cold and two starts from warm conditions in succession against quadratic load torque with 90% of the rated torque at the rated speed and at 80% of the rated voltage.
To check validity against other starting requirements, contact ABB.

[2] Starting time with given values of the load inertia from cold condition in succession against quadratic load torque with 90% of the rated torque at the rated speed and at rated voltage.

[3] The sound pressure levels are presented at no-load. Sound level values of 6…8-pole motors at no-load are typically 1...3 dB(A) higher than the corresponding values at no-load. The variation and measuring tolerance of the figures is +3 dB(A).

[4] Efficiency based on typical additional losses acc. to measurements.

HV Dust ignition proof motors Ex tD categories 2D and 3D

Technical data for totally enclosed squirrel cage three phase cast iron motors

IP 55. IP 65 - IC 411 - Insulation class F. temperature rise class B. ambient temperature 50°C

Output kW		Motor type		Product code		Speed r/min	Efficiency Full load 100%	Efficiency 3/4 load 75%	Power factor Full load 100%	Power factor 3/4 load 75%	Current I_N A	Current I_S/I_N	Current I_0 A
3000 r/min = 2 poles						**3300 V 50 Hz**							
180	5)	**M3GM**	**355 LKA**	3GGM	351 810-•RB	2979	94.4	94.3	0.90	0.90	37	5.3	7
200	5)	**M3GM**	**355 LKB**	3GGM	351 820-•RB	2980	94.9	94.8	0.91	0.91	41	5.3	7
224	5)	**M3GM**	**355 LKC**	3GGM	351 830-•RB	2980	95.1	95.1	0.91	0.92	45	5.4	7
250	5)	**M3GM**	**355 LKD**	3GGM	351 840-•RB	2980	95.4	95.4	0.91	0.92	50	5.4	8
265	5)	**M3GM**	**355 LKE**	3GGM	351 850-•RB	2978	95.4	95.5	0.91	0.92	53	5.3	8
280	5)	**M3GM**	**400 LKA**	3GGM	401 810-•RB	2981	95.4	95.3	0.91	0.91	57	5.3	10
315	5)	**M3GM**	**400 LKB**	3GGM	401 820-•RB	2982	95.6	95.6	0.90	0.90	64	5.3	12
355	5)	**M3GM**	**400 LKC**	3GGM	401 830-•RB	2983	95.9	95.9	0.91	0.91	71	5.4	12
400	5)	**M3GM**	**400 LKD**	3GGM	401 840-•RB	2983	96.1	96.2	0.92	0.92	79	5.4	11
450	5)	**M3GM**	**400 LKE**	3GGM	401 850-•RB	2982	96.2	96.4	0.92	0.93	89	5.3	12
3000 r/min = 2 poles						**6600 V 50 Hz**							
224	5)	**M3GM**	**400 LKA**	3GGM	401 810-•SB	2982	94.9	94.6	0.88	0.88	23	5.4	5
250	5)	**M3GM**	**400 LKB**	3GGM	401 820-•SB	2982	95.0	94.9	0.88	0.88	26	5.4	5
280	5)	**M3GM**	**400 LKC**	3GGM	401 830-•SB	2982	95.2	95.2	0.91	0.91	28	5.4	5
315	5)	**M3GM**	**400 LKD**	3GGM	401 840-•SB	2982	95.3	95.4	0.91	0.91	32	5.4	5
355	5)	**M3GM**	**400 LKE**	3GGM	401 850-•SB	2982	95.6	95.7	0.91	0.92	36	5.4	5
400	5)	**M3GM**	**400 LKF**	3GGM	401 860-•SB	2982	95.9	96.1	0.91	0.92	40	5.4	6

8

The bullet in the product code indicates choice of mounting arrangement (see ordering information page).

When ordering variant code for protection type has to be added to the product code according to needs:

452 DIP/Ex tD acc. to ATEX directive 94/9/EC, T=125°C, cat. 3D, IP55
453 DIP/Ex tD acc. to ATEX directive 94/9/EC, T=125°C, cat. 2D, IP65
454 DIP/Ex tD acc. to ATEX directive 94/9/EC, T=125°C, cat. 3D, IP65
804 DIP/Ex tD, IEC 61241, T125°C, IP55 (zone 22)
805 DIP/Ex tD, IEC 61241, T125°C, IP65 (zone 21)
806 DIP/Ex tD, IEC 61241, T125°C, IP65 (zone 22)

HV Dust ignition proof motors Ex tD categories 2D and 3D

Technical data for totally enclosed squirrel cage three phase cast iron motors

IP 55. IP 65 - IC 411 - Insulation class F. temperature rise class B. ambient temperature 50°C

Output kW		Motor type		Torque T_N Nm	T_S / T_N	T_{max} / T_N	Power factor cos ϕ_k	Load inertia [1] kgm²	Starting time cold [2] s	Maximum stalling time hot s	Rotor inertia kgm²	Rotor weight kg	Motor weight kg	Sound pressure level L_P [3] dB(A)
3000 r/min = 2 poles						**3300 V 50 Hz**								
180	[5]	**M3GM**	**355 LKA**	577	0.5	2.5	0.11	13	15	20	3.1	290	1750	78
200	[5]	**M3GM**	**355 LKB**	641	0.6	2.5	0.11	15	14	20	3.9	340	1980	78
224	[5]	**M3GM**	**355 LKC**	718	0.6	2.5	0.11	16	14	20	4.2	360	2070	78
250	[5]	**M3GM**	**355 LKD**	801	0.6	2.5	0.11	18	13	20	4.6	390	2210	78
265	[5]	**M3GM**	**355 LKE**	850	0.6	2.4	0.11	19	13	20	4.6	390	2210	78
280	[5]	**M3GM**	**400 LKA**	897	0.4	2.5	0.09	20	19	25	5.6	430	2440	79
315	[5]	**M3GM**	**400 LKB**	1009	0.5	2.5	0.09	22	17	25	6.0	440	2500	79
355	[5]	**M3GM**	**400 LKC**	1137	0.5	2.5	0.09	24	16	25	7.6	500	2740	79
400	[5]	**M3GM**	**400 LKD**	1281	0.5	2.5	0.10	27	15	20	10.0	570	3090	79
450	[5]	**M3GM**	**400 LKE**	1441	0.6	2.4	0.10	30	14	20	10.8	600	3190	79
3000 r/min = 2 poles						**6600 V 50 Hz**								
224	[5]	**M3GM**	**400 LKA**	717	0.8	2.4	0.13	16	12	20	6.4	480	2530	79
250	[5]	**M3GM**	**400 LKB**	801	0.8	2.4	0.12	18	11	20	6.4	480	2530	79
280	[5]	**M3GM**	**400 LKC**	897	0.5	2.5	0.10	20	17	25	6.7	460	2510	79
315	[5]	**M3GM**	**400 LKD**	1009	0.5	2.4	0.10	19	15	20	6.7	460	2510	79
355	[5]	**M3GM**	**400 LKE**	1137	0.5	2.4	0.10	23	15	20	7.7	510	2740	79
400	[5]	**M3GM**	**400 LKF**	1281	0.5	2.4	0.10	27	15	20	10.4	580	3090	79

[1] **355LK:** The given values of load inertia assume two starts from cold and one start from warm conditions in succession against quadratic load torque with 75% of the rated torque at the rated speed and at 80% of the rated voltage.

400LK: The given values of load inertia assume two starts from cold and one start from warm conditions in succession against quadratic load torque with 70% of the rated torque at the rated speed and at 80% of the rated voltage.

To check validity against other starting requirements, contact ABB.

[2] **355LK:** Starting time with given values of the load inertia from cold condition in succession against quadratic load torque with 75% of the rated torque at the rated speed and at rated voltage.

400LK: Starting time with given values of the load inertia from cold condition in succession against quadratic load torque with 70% of the rated torque at the rated speed and at rated voltage.

[3] The sound pressure levels are presented at no-load. The magnetic noise level of 2- and 4-pole motors is typically low compared to the fan noise, resulting no increase in the noise level on-load. The variation and measuring tolerance of the figures is +3 dB(A).

[4] Efficiency based on typical additional losses acc. to measurements.

[5] Unidirectional fan construction as standard. Direction of rotation must be stated when ordering, see variant codes 044 and 045.

HV Dust ignition proof motors Ex tD categories 2D and 3D

Technical data for totally enclosed squirrel cage three phase cast iron motors

IP 55. IP 65 - IC 411 - Insulation class F. temperature rise class B. ambient temperature 50°C

Output kW	Motor type		Product code		Speed r/min	Efficiency Full load 100%	Efficiency 3/4 load 75%	Power factor Full load 100%	Power factor 3/4 load 75%	Current I_N A	Current I_S/I_N	Current I_0 A
1500 r/min = 4 poles					**3300 V 50 Hz**							
132	**M3GM**	**315 LKA**	3GGM	312 810-•RB	1486	94.4	94.4	0.85	0.83	29	5.2	10
140	**M3GM**	**315 LKB**	3GGM	312 820-•RB	1486	94.6	94.6	0.85	0.83	30	5.4	10
155	**M3GM**	**315 LKC**	3GGM	312 830-•RB	1485	94.7	94.8	0.85	0.83	33	5.3	11
180	**M3GM**	**355 LKA**	3GGM	352 810-•RB	1490	94.8	94.6	0.83	0.79	40	5.4	15
200	**M3GM**	**355 LKB**	3GGM	352 820-•RB	1490	95.1	94.9	0.84	0.81	44	5.3	15
224	**M3GM**	**355 LKC**	3GGM	352 830-•RB	1490	95.3	95.2	0.84	0.82	49	5.2	16
250	**M3GM**	**355 LKD**	3GGM	352 840-•RB	1490	95.5	95.4	0.84	0.82	54	5.4	18
280	**M3GM**	**355 LKE**	3GGM	352 850-•RB	1490	95.5	95.5	0.85	0.82	61	5.2	20
315	**M3GM**	**355 LKF**	3GGM	352 860-•RB	1490	95.7	95.7	0.85	0.83	68	5.3	22
335	**M3GM**	**355 LKG**	3GGM	352 870-•RB	1490	95.9	95.8	0.85	0.83	72	5.4	23
355	**M3GM**	**400 LKA**	3GGM	402 810-•RB	1489	95.8	95.8	0.85	0.83	76	5.0	23
400	**M3GM**	**400 LKB**	3GGM	402 820-•RB	1490	96.0	96.0	0.85	0.83	86	5.2	27
450	**M3GM**	**400 LKC**	3GGM	402 830-•RB	1490	96.2	96.2	0.86	0.84	95	5.3	28
500	**M3GM**	**400 LKD**	3GGM	402 840-•RB	1490	96.4	96.4	0.86	0.85	105	5.4	29
560	**M3GM**	**450 LA**	3GGM	452 510-•RB	1491	96.3	96.2	0.86	0.86	117	5.4	31
600	**M3GM**	**450 LB**	3GGM	452 520-•RB	1491	96.4	96.4	0.87	0.86	125	5.4	32
1500 r/min = 4 poles					**6600 V 50 Hz**							
224	**M3GM**	**355 LKA**	3GGM	352 810-•SB	1487	95.2	95.2	0.84	0.82	24	5.3	8
250	**M3GM**	**355 LKB**	3GGM	352 820-•SB	1487	95.4	95.4	0.85	0.82	27	5.4	9
280	**M3GM**	**400 LKA**	3GGM	402 810-•SB	1491	95.2	95.0	0.84	0.81	31	5.4	11
315	**M3GM**	**400 LKB**	3GGM	402 820-•SB	1491	95.3	95.3	0.85	0.82	34	5.3	11
355	**M3GM**	**400 LKC**	3GGM	402 830-•SB	1490	95.8	95.8	0.86	0.85	37	5.3	10
400	**M3GM**	**400 LKD**	3GGM	402 840-•SB	1491	96.0	96.0	0.87	0.85	42	5.4	12
450	**M3GM**	**400 LKE**	3GGM	402 850-•SB	1490	96.1	96.2	0.87	0.86	47	5.3	13
500	**M3GM**	**450 LA**	3GGM	452 510-•SB	1491	96.1	96.0	0.86	0.85	53	5.4	14
560	**M3GM**	**450 LB**	3GGM	452 520-•SB	1491	96.3	96.2	0.86	0.85	59	5.4	16

The bullet in the product code indicates choice of mounting arrangement (see ordering information page).

When ordering variant code for protection type has to be added to the product code according to needs:

452 DIP/Ex tD acc. to ATEX directive 94/9/EC, T=125°C, cat. 3D, IP55
453 DIP/Ex tD acc. to ATEX directive 94/9/EC, T=125°C, cat. 2D, IP65
454 DIP/Ex tD acc. to ATEX directive 94/9/EC, T=125°C, cat. 3D, IP65
804 DIP/Ex tD, IEC 61241, T125°C, IP55 (zone 22)
805 DIP/Ex tD, IEC 61241, T125°C, IP65 (zone 21)
806 DIP/Ex tD, IEC 61241, T125°C, IP65 (zone 22)

HV Dust ignition proof motors Ex tD categories 2D and 3D

Technical data for totally enclosed squirrel cage three phase cast iron motors

IP 55. IP 65 - IC 411 - Insulation class F. temperature rise class B. ambient temperature 50°C

Output kW	Motor type		Torque T_N Nm	T_S / T_N	T_{max} / T_N	Power factor cos ϕ_k	Load inertia [1] kgm²	Starting time cold [2] s	Maximum stalling time hot s	Rotor inertia kgm²	Rotor weight kg	Motor weight kg	Sound pressure level L_P [3] dB(A)
1500 r/min = 4 poles					**1500 r/min = 4 poles**								
132	**M3GM**	**315 LKA**	848	0.8	2.4	0.15	49	11	20	1.9	220	1180	73
140	**M3GM**	**315 LKB**	900	0.8	2.5	0.15	52	11	20	2.0	230	1210	73
155	**M3GM**	**315 LKC**	997	0.8	2.4	0.15	57	11	20	2.1	240	1250	73
180	**M3GM**	**355 LKA**	1153	0.9	2.4	0.15	65	11	20	5.0	370	1750	74
200	**M3GM**	**355 LKB**	1282	0.9	2.3	0.15	71	11	20	5.5	400	1840	74
224	**M3GM**	**355 LKC**	1435	0.9	2.3	0.15	79	11	20	6.1	430	1940	74
250	**M3GM**	**355 LKD**	1602	1.0	2.3	0.15	87	10	20	6.7	460	2030	74
280	**M3GM**	**355 LKE**	1795	0.9	2.2	0.15	97	11	20	6.9	470	2060	74
315	**M3GM**	**355 LKF**	2019	1.0	2.3	0.15	107	10	20	7.8	520	2200	74
335	**M3GM**	**355 LKG**	2147	1.0	2.3	0.15	113	10	20	8.3	550	2300	74
355	**M3GM**	**400 LKA**	2277	0.7	2.2	0.11	119	13	20	9.6	560	2670	79
400	**M3GM**	**400 LKB**	2564	0.7	2.3	0.11	132	12	18	12.0	600	2790	79
450	**M3GM**	**400 LKC**	2884	0.7	2.3	0.11	147	12	18	14.4	660	3020	79
500	**M3GM**	**400 LKD**	3204	0.7	2.3	0.11	161	11	18	18.0	760	3350	79
560	**M3GM**	**450 LA**	3586	1.0	2.3	0.13	177	10	20	23.5	970	4280	83
600	**M3GM**	**450 LB**	3843	1.0	2.2	0.13	188	10	20	30.7	1070	4570	83
1500 r/min = 4 poles					**6600 V 50 Hz**								
224	**M3GM**	**355 LKA**	1438	1.1	2.3	0.16	79	9	20	4.8	390	2050	74
250	**M3GM**	**355 LKB**	1606	1.1	2.3	0.16	87	9	20	5.5	420	2190	74
280	**M3GM**	**400 LKA**	1793	1.0	2.4	0.15	97	10	20	10.2	560	2560	79
315	**M3GM**	**400 LKB**	2018	0.7	2.3	0.12	107	14	20	9.6	560	2600	79
355	**M3GM**	**400 LKC**	2275	0.7	2.3	0.12	119	13	20	13.8	650	2900	79
400	**M3GM**	**400 LKD**	2562	0.7	2.3	0.11	132	12	20	16.2	710	3130	79
450	**M3GM**	**400 LKE**	2884	0.7	2.3	0.11	147	12	20	17.4	750	3240	79
500	**M3GM**	**450 LA**	3202	1.1	2.2	0.15	161	9	20	28.6	1030	4390	83
560	**M3GM**	**450 LB**	3586	1.1	2.2	0.15	177	9	20	30.7	1080	4550	83

[1] **315LK:** The given values of load inertia assume three starts from cold and two starts from warm conditions in succession against quadratic load torque with 90% of the rated torque at the rated speed and at 80% of the rated voltage.

355LK: The given values of load inertia assume two starts from cold and one start from warm conditions in succession against quadratic load torque with 80% of the rated torque at the rated speed and at 80% of the rated voltage.

400LK, 450L: The given values of load inertia assume two starts from cold and one start from warm conditions in succession against quadratic load torque with 75% of the rated torque at the rated speed and at 80% of the rated voltage.

To check validity against other starting requirements, contact ABB.

[2] **315LK:** Starting time with given values of the load inertia from cold condition in succession against quadratic load torque with 90% of the rated torque at the rated speed and at rated voltage.

355LK: Starting time with given values of the load inertia from cold condition in succession against quadratic load torque with 80% of the rated torque at the rated speed and at rated voltage.

400LK, 450L: Starting time with given values of the load inertia from cold condition in succession against quadratic load torque with 75% of the rated torque at the rated speed and at rated voltage.

[3] The sound pressure levels are presented at no-load. The magnetic noise level of 2- and 4-pole motors is typically low compared to the fan noise, resulting no increase in the noise level on-load. The variation and measuring tolerance of the figures is +3 dB(A).

[4] Efficiency based on typical additional losses acc. to measurements.

HV Dust ignition proof motors Ex tD categories 2D and 3D

Technical data for totally enclosed squirrel cage three phase cast iron motors

IP 55. IP 65 - IC 411 - Insulation class F. temperature rise class B. ambient temperature 50°C

Output kW	Motor type		Product code		Speed r/min	Efficiency Full load 100%	Efficiency 3/4 load 75%	Power factor Full load 100%	Power factor 3/4 load 75%	Current I_N A	Current I_S/I_N	Current I_0 A
1000 r/min = 6 poles					**3300 V 50 Hz**							
112	**M3GM**	**315 LKA**	3GGM	313 810-•RB	990	94.4	94.6	0.79	0.75	26	5.1	11
125	**M3GM**	**315 LKB**	3GGM	313 820-•RB	990	94.6	94.7	0.79	0.75	29	5.1	13
132	**M3GM**	**315 LKC**	3GGM	313 830-•RB	991	94.8	94.8	0.78	0.73	31	5.3	14
140	**M3GM**	**355 LKA**	3GGM	353 810-•RB	993	95.1	95.1	0.78	0.74	33	5.0	14
160	**M3GM**	**355 LKB**	3GGM	353 820-•RB	993	95.4	95.4	0.79	0.75	37	5.1	16
180	**M3GM**	**355 LKC**	3GGM	353 830-•RB	993	95.5	95.5	0.78	0.74	42	5.2	18
200	**M3GM**	**355 LKD**	3GGM	353 840-•RB	993	95.7	95.7	0.79	0.75	46	5.2	20
224	**M3GM**	**355 LKE**	3GGM	353 850-•RB	993	95.8	95.8	0.79	0.74	52	5.3	22
250	**M3GM**	**355 LKF**	3GGM	353 860-•RB	992	95.7	95.8	0.79	0.75	58	5.1	24
280	**M3GM**	**355 LKG**	3GGM	353 870-•RB	993	95.9	96.0	0.79	0.74	65	5.3	28
355	**M3GM**	**400 LKA**	3GGM	403 811-•RB	993	96.0	96.1	0.81	0.78	80	5.3	30
400	**M3GM**	**400 LKB**	3GGM	403 821-•RB	994	96.2	96.2	0.81	0.78	89	5.5	33
425	**M3GM**	**400 LKC**	3GGM	403 831-•RB	993	96.2	96.3	0.82	0.79	94	5.4	34
450	**M3GM**	**450 LA**	3GGM	453 510-•RB	993	96.2	96.4	0.84	0.83	97	5.3	29
500	**M3GM**	**450 LB**	3GGM	453 520-•RB	993	96.4	96.5	0.85	0.83	107	5.4	32
560	**M3GM**	**450 LC**	3GGM	453 530-•RB	993	96.5	96.6	0.85	0.84	119	5.4	34
1000 r/min = 6 poles					**6600 V 50 Hz**							
150	**M3GM**	**355 LKA**	3GGM	353 810-•SB	991	94.9	94.9	0.77	0.72	18	5.2	8
160	**M3GM**	**355 LKB**	3GGM	353 820-•SB	990	95.0	95.0	0.78	0.73	19	5.2	9
180	**M3GM**	**355 LKC**	3GGM	353 830-•SB	990	95.1	95.2	0.78	0.74	21	5.0	9
200	**M3GM**	**355 LKD**	3GGM	353 840-•SB	990	95.3	95.3	0.77	0.72	24	5.2	11
280	**M3GM**	**400 LKA**	3GGM	403 811-•SB	993	95.6	95.5	0.78	0.74	33	5.1	14
315	**M3GM**	**400 LKB**	3GGM	403 821-•SB	993	95.8	95.7	0.79	0.75	37	5.2	15
355	**M3GM**	**400 LKC**	3GGM	403 831-•SB	993	96.0	95.9	0.79	0.75	41	5.4	17
375	**M3GM**	**400 LKD**	3GGM	403 841-•SB	993	96.1	96.0	0.80	0.76	43	5.4	17
400	**M3GM**	**450 LA**	3GGM	453 510-•SB	994	96.1	96.1	0.84	0.82	43	5.4	14
450	**M3GM**	**450 LB**	3GGM	453 520-•SB	994	96.2	96.3	0.84	0.83	48	5.3	15
500	**M3GM**	**450 LC**	3GGM	453 530-•SB	994	96.3	96.4	0.85	0.83	54	5.4	16
525	**M3GM**	**450 LD**	3GGM	453 541-•SB	993	96.3	96.5	0.85	0.84	56	5.5	16

8

The bullet in the product code indicates choice of mounting arrangement (see ordering information page).

When ordering variant code for protection type has to be added to the product code according to needs:

452 DIP/Ex tD acc. to ATEX directive 94/9/EC, T=125°C, cat. 3D, IP55
453 DIP/Ex tD acc. to ATEX directive 94/9/EC, T=125°C, cat. 2D, IP65
454 DIP/Ex tD acc. to ATEX directive 94/9/EC, T=125°C, cat. 3D, IP65
804 DIP/Ex tD, IEC 61241, T125°C, IP55 (zone 22)
805 DIP/Ex tD, IEC 61241, T125°C, IP65 (zone 21)
806 DIP/Ex tD, IEC 61241, T125°C, IP65 (zone 22)

HV Dust ignition proof motors Ex tD categories 2D and 3D

Technical data for totally enclosed squirrel cage three phase cast iron motors

IP 55. IP 65 - IC 411 - Insulation class F. temperature rise class B. ambient temperature 50°C

Output kW	Motor type		Torque T_N Nm	T_S / T_N	T_{max} / T_N	Power factor cos ϕ_k	Load inertia [1] kgm²	Starting time cold [2] s	Maximum stalling time hot s	Rotor inertia kgm²	Rotor weight kg	Motor weight kg	Sound pressure level L_P [3] dB(A)
1000 r/min = 6 poles					**3300 V 50 Hz**								
112	**M3GM**	**315 LKA**	1080	1.1	2.3	0.18	113	11	20	3.1	290	1230	65
125	**M3GM**	**315 LKB**	1206	1.1	2.2	0.18	125	11	20	3.3	300	1260	65
132	**M3GM**	**315 LKC**	1272	1.2	2.4	0.18	131	10	20	3.5	310	1300	65
140	**M3GM**	**355 LKA**	1347	0.8	2.2	0.14	139	14	20	5.0	370	1740	70
160	**M3GM**	**355 LKB**	1539	0.8	2.3	0.13	157	14	20	5.8	410	1870	70
180	**M3GM**	**355 LKC**	1731	0.9	2.3	0.13	175	13	20	6.1	430	1920	70
200	**M3GM**	**355 LKD**	1924	0.9	2.3	0.13	192	13	20	6.6	460	2010	70
224	**M3GM**	**355 LKE**	2154	0.9	2.3	0.13	213	12	20	7.2	490	2100	70
250	**M3GM**	**355 LKF**	2406	0.9	2.2	0.13	236	13	20	7.5	500	2130	70
280	**M3GM**	**355 LKG**	2694	0.9	2.3	0.13	261	12	20	8.3	550	2270	70
355	**M3GM**	**400 LKA**	3412	1.0	2.3	0.14	324	11	22	17.9	860	3100	78
400	**M3GM**	**400 LKB**	3843	1.1	2.4	0.14	360	11	22	21.1	980	3390	78
425	**M3GM**	**400 LKC**	4085	1.1	2.2	0.14	380	11	22	21.0	980	3380	78
450	**M3GM**	**450 LA**	4327	1.1	2.1	0.16	400	10	20	33.6	1050	4000	78
500	**M3GM**	**450 LB**	4807	1.2	2.2	0.16	439	10	20	36.6	1110	4150	78
560	**M3GM**	**450 LC**	5385	1.2	2.1	0.16	486	9	20	45.4	1290	4580	78
1000 r/min = 6 poles					**6600 V 50 Hz**								
150	**M3GM**	**355 LKA**	1446	1.0	2.4	0.15	148	11	20	4.8	390	2040	70
160	**M3GM**	**355 LKB**	1543	1.0	2.4	0.15	157	11	20	5.0	410	2090	70
180	**M3GM**	**355 LKC**	1737	0.9	2.3	0.15	175	12	20	5.3	420	2140	70
200	**M3GM**	**355 LKD**	1929	1.0	2.4	0.15	192	11	20	5.7	440	2230	70
280	**M3GM**	**400 LKA**	2693	1.0	2.2	0.14	261	11	22	9.6	630	2740	78
315	**M3GM**	**400 LKB**	3030	1.1	2.2	0.14	291	11	22	10.9	680	2920	78
355	**M3GM**	**400 LKC**	3414	1.1	2.3	0.14	324	10	22	12.6	750	3150	78
375	**M3GM**	**400 LKD**	3606	1.1	2.2	0.14	340	10	22	14.3	830	3380	78
400	**M3GM**	**450 LA**	3844	1.2	2.2	0.17	360	10	20	30.8	1080	4030	78
450	**M3GM**	**450 LB**	4325	1.2	2.2	0.17	400	10	20	39.5	1170	4250	78
500	**M3GM**	**450 LC**	4806	1.2	2.2	0.17	439	10	20	43.9	1260	4480	78
525	**M3GM**	**450 LD**	5048	1.2	2.2	0.16	459	9	22	34.5	1260	4480	78

[1] **315LK, 355LK:** The given values of load inertia assume three starts from cold and two starts from warm conditions in succession against quadratic load torque with 90% of the rated torque at the rated speed and at 80% of the rated voltage.

400LK, 450L: The given values of load inertia assume two starts from cold and one start from warm conditions in succession against quadratic load torque with 80% of the rated torque at the rated speed and at 80% of the rated voltage.

To check validity against other starting requirements, contact ABB.

[2] **315LK, 355LK:** Starting time with given values of the load inertia from cold condition in succession against quadratic load torque with 90% of the rated torque at the rated speed and at rated voltage.

400LK, 450L: Starting time with given values of the load inertia from cold condition in succession against quadratic load torque with 80% of the rated torque at the rated speed and at rated voltage.

[3] The sound pressure levels are presented at no-load. Sound level values of 6…8-pole motors at no-load are typically 1...3 dB(A) higher than the corresponding values at no-load. The variation and measuring tolerance of the figures is +3 dB(A).

[4] Efficiency based on typical additional losses acc. to measurements.

HV Dust ignition proof motors Ex tD categories 2D and 3D

Technical data for totally enclosed squirrel cage three phase cast iron motors

IP 55. IP 65 - IC 411 - Insulation class F. temperature rise class B. ambient temperature 50°C

Output kW	Motor type		Product code		Speed r/min	Efficiency Full load 100%	Efficiency 3/4 load 75%	Power factor Full load 100%	Power factor 3/4 load 75%	Current I_N A	Current I_S/I_N	Current I_0 A
750 r/min = 8 poles					**3300 V 50 Hz**							
160	**M3GM**	**400 LKA**	3GGM	404 810-•RB	744	94.6	94.6	0.76	0.71	39	5.0	19
180	**M3GM**	**400 LKB**	3GGM	404 820-•RB	744	94.8	94.9	0.77	0.73	43	4.9	19
200	**M3GM**	**400 LKC**	3GGM	404 830-•RB	744	95.0	95.1	0.78	0.73	47	5.0	21
224	**M3GM**	**400 LKD**	3GGM	404 840-•RB	744	95.2	95.2	0.78	0.74	53	5.2	23
250	**M3GM**	**400 LKE**	3GGM	404 850-•RB	745	95.4	95.4	0.78	0.73	59	5.4	26
280	**M3GM**	**400 LKF**	3GGM	404 860-•RB	745	95.6	95.6	0.78	0.74	65	5.4	29
315	**M3GM**	**400 LKG**	3GGM	404 870-•RB	744	95.6	95.6	0.78	0.74	74	5.4	33
355	**M3GM**	**450 LA**	3GGM	454 510-•RB	745	95.9	95.8	0.79	0.75	82	5.4	35
400	**M3GM**	**450 LB**	3GGM	454 520-•RB	745	96.0	95.9	0.79	0.74	92	5.4	40
450	**M3GM**	**450 LC**	3GGM	454 530-•RB	745	96.1	96.0	0.79	0.74	104	5.5	45
750 r/min = 8 poles					**6600 V 50 Hz**							
160	**M3GM**	**400 LKA**	3GGM	404 810-•SB	744	94.5	94.4	0.75	0.70	20	5.0	10
180	**M3GM**	**400 LKB**	3GGM	404 820-•SB	744	94.7	94.7	0.76	0.71	22	4.9	10
200	**M3GM**	**400 LKC**	3GGM	404 830-•SB	744	95.0	94.9	0.76	0.71	24	5.1	12
224	**M3GM**	**400 LKD**	3GGM	404 840-•SB	744	95.1	95.0	0.76	0.70	27	5.3	13
250	**M3GM**	**400 LKE**	3GGM	404 850-•SB	744	95.2	95.1	0.76	0.71	30	5.3	15
280	**M3GM**	**400 LKF**	3GGM	404 860-•SB	744	95.3	95.2	0.75	0.69	34	5.4	17
315	**M3GM**	**450 LA**	3GGM	454 510-•SB	745	95.6	95.5	0.79	0.75	36	5.4	16
355	**M3GM**	**450 LB**	3GGM	454 520-•SB	745	95.8	95.7	0.79	0.75	41	5.3	17
400	**M3GM**	**450 LC**	3GGM	454 530-•SB	745	95.9	95.8	0.79	0.75	46	5.3	19

8

The bullet in the product code indicates choice of mounting arrangement (see ordering information page).

When ordering variant code for protection type has to be added to the product code according to needs:

452 DIP/Ex tD acc. to ATEX directive 94/9/EC, T=125°C, cat. 3D, IP55
453 DIP/Ex tD acc. to ATEX directive 94/9/EC, T=125°C, cat. 2D, IP65
454 DIP/Ex tD acc. to ATEX directive 94/9/EC, T=125°C, cat. 3D, IP65
804 DIP/Ex tD, IEC 61241, T125°C, IP55 (zone 22)
805 DIP/Ex tD, IEC 61241, T125°C, IP65 (zone 21)
806 DIP/Ex tD, IEC 61241, T125°C, IP65 (zone 22)

HV Dust ignition proof motors Ex tD categories 2D and 3D

Technical data for totally enclosed squirrel cage three phase cast iron motors

IP 55. IP 65 - IC 411 - Insulation class F. temperature rise class B. ambient temperature 50°C

Output kW	Motor type		Torque T_N Nm	T_S / T_N	T_{max} / T_N	Power factor cos ϕ_k	Load inertia [1] kgm²	Starting time cold [2] s	Maximum stalling time hot s	Rotor inertia kgm²	Rotor weight kg	Motor weight kg	Sound pressure level L_P [3] dB(A)
750 r/min = 8 poles					**3300 V 50 Hz**								
160	**M3GM**	**400 LKA**	2053	1.0	2.1	0.18	315	14	20	12.6	590	2400	75
180	**M3GM**	**400 LKB**	2310	1.0	2.0	0.18	352	14	20	14.4	640	2510	75
200	**M3GM**	**400 LKC**	2566	1.0	2.1	0.17	388	14	20	16.2	690	2630	75
224	**M3GM**	**400 LKD**	2873	1.1	2.2	0.18	430	12	20	20.7	800	2900	75
250	**M3GM**	**400 LKE**	3206	1.2	2.3	0.18	476	12	20	24.3	900	3130	75
280	**M3GM**	**400 LKF**	3591	1.2	2.2	0.17	528	11	20	26.1	950	3270	75
315	**M3GM**	**400 LKG**	4041	1.2	2.2	0.17	587	11	20	27.9	990	3370	75
355	**M3GM**	**450 LA**	4548	1.2	2.2	0.16	655	12	20	34.4	1180	4270	76
400	**M3GM**	**450 LB**	5125	1.2	2.3	0.16	730	11	20	42.4	1240	4420	76
450	**M3GM**	**450 LC**	5766	1.2	2.3	0.16	811	11	20	46.8	1330	4650	76
750 r/min = 8 poles					**6600 V 50 Hz**								
160	**M3GM**	**400 LKA**	2054	1.0	2.3	0.17	315	13	20	10.8	590	2600	75
180	**M3GM**	**400 LKB**	2312	0.9	2.2	0.17	352	14	20	12.6	650	2770	75
200	**M3GM**	**400 LKC**	2568	1.0	2.3	0.16	388	13	20	14.4	710	2950	75
224	**M3GM**	**400 LKD**	2876	1.1	2.3	0.16	430	12	20	16.8	780	3180	75
250	**M3GM**	**400 LKE**	3210	1.1	2.3	0.16	476	12	20	18.0	820	3300	75
280	**M3GM**	**400 LKF**	3596	1.1	2.4	0.16	528	11	20	18.6	840	3360	75
315	**M3GM**	**450 LA**	4035	1.2	2.2	0.16	587	12	20	36.6	1120	4070	76
355	**M3GM**	**450 LB**	4548	1.2	2.2	0.16	655	12	20	34.4	1180	4230	76
400	**M3GM**	**450 LC**	5126	1.1	2.2	0.16	730	12	20	37.7	1270	4450	76

[1] **400LK:** The given values of load inertia assume three starts from cold and two starts from warm conditions in succession against quadratic load torque with 90% of the rated torque at the rated speed and at 80% of the rated voltage.

450L: The given values of load inertia assume two starts from cold and one start from warm conditions in succession against quadratic load torque with 85% of the rated torque at the rated speed and at 80% of the rated voltage.

To check validity against other starting requirements, contact ABB.

[2] **400LK:** Starting time with given values of the load inertia from cold condition in succession against quadratic load torque with 90% of the rated torque at the rated speed and at rated voltage.

450L: Starting time with given values of the load inertia from cold condition in succession against quadratic load torque with 85% of the rated torque at the rated speed and at rated voltage.

[3] The sound pressure levels are presented at no-load. Sound level values of 6…8-pole motors at no-load are typically 1...3 dB(A) higher than the corresponding values at no-load. The variation and measuring tolerance of the figures is +3 dB(A).

[4] Efficiency based on typical additional losses acc. to measurements.

HV Non-sparking and dust ignition proof motors - Variant codes

Code [1]	Variant	Motor size			
		315	355	400	450
Hazardous environments					
	Following codes have to be added to the product code according to needs.				
452	DIP/Ex tD acc. to ATEX directive 94/9/EC , T= 125 ºC, cat. 3D, IP55	P	P	P	P
453	DIP/Ex tD acc. to ATEX directive 94/9/EC , T= 125 ºC, cat. 2D, IP65	P	P	P	P
454	DIP/Ex tD acc. to ATEX directive 94/9/EC , T= 125 ºC, cat. 3D, IP65	P	P	P	P
456	Ex nA design, fulfilling IEC 60079-15, with certificate.	P	P	P	P
480	Ex nA II acc. to ATEX directive 94/9/EC, temp. class T3	P	P	P	P
804	DIP/Ex tD, IEC 61241, T125 ºC, IP55 (zone 22)	P	P	P	P
805	DIP/Ex tD, IEC 61241, T125 ºC, IP65 (zone 21)	P	P	P	P
806	DIP/Ex tD, IEC 61241, T125 ºC, IP65 (zone 22)	P	P	P	P
Balancing					
423	Balanced without key	P	P	P	P
424	Full key balancing.	P	P	P	P
Bearings and lubrication					
036	Transport lock for bearings.	P	P	P	P
037	Roller bearing at D-end.	P	P	P	P
107	Pt100 2-wire in bearings	P	P	P	P
651	Dial type thermometers (2 pcs) for bearings, without contacts.	P	P	P	P
654	Provision for vibration sensors (M8x1).	P	P	P	P
Branch standard designs					
178	Stainless steel/acid proof bolts.	P	P	P	P
398	Motor designed for ambient temperature -20°C to -40°C.	P	P	P	P
Cooling system					
044	Unidirectional fan, clockwise seen from D-end.	NA	P	P	P
045	Unidirectional fan, counter clockwise seen from D-end.	NA	P	P	P
Coupling					
035	Assembly of customer supplied coupling-half	P	P	P	P
Drain holes					
065	Plugged existing drain holes.	P	P	P	P
448	Draining holes with metal plugs.	P	P	P	P
Heating elements					
450	Heating element, 100-120 V.	P	P	P	P
451	Heating element, 200-240 V.	P	P	P	P
Painting					
114	Special paint colour, standard grade.	P	P	P	P
Protection					
005	Metal protective roof, vertical motor, shaft down.	P	P	P	P
158	Degree of protection IP 65.	P	P	P	P
403	Degree of protection IP 56.	P	P	P	P
Rating & instruction plates					
002	Restamping output, continuous duty.	R	R	R	R
135	Mounting of additional identification plate, stainless	P	P	P	P

[1] Certain variant codes cannot be used simultaneously.

P = New manufacture only.
R = On request.
NA = Not applicable.

Code [1]	Variant	Motor size			
		315	355	400	450
Standards and regulations					
010	Fulfilling CSA Safety Certificate.	P	P	P	P
778	GOST Export/Import Certificate (Russia)	P	P	P	P
782	Fulfilling CQST Certificate requirements (China).	P	P	P	P
Stator winding temperature sensors					
653	Pt-100 (12 pcs) inside stator slots.	P	P	P	P
Terminal box					
021	Terminal box LHS (seen from D-end).	P	P	P	P
655	No terminal box, three (3) leads out 1.5 m (5 ft).	P	P	P	P
656	No terminal box, six (6) leads out 1.5 m (5 ft).	P	P	P	P
750	Star point terminal box.	P	P	P	P
Testing					
	Routine test report included as standard.				
146	Type test with report for motor from specific delivery patch.	P	P	P	P
147	Type test with report for motor from specific delivery patch, customer witnessed.	P	P	P	P
762	Noise level test.	P	P	P	P
Variable speed drives					
701	Insulated bearing at N-end.	P	P	P	P
Foundation and installation					
	Foundation studs	P	P	P	P
	Sole plates without anchor bolts	P	P	P	P
	Sole plates with anchor bolts	P	P	P	P
	Slide rails for belt drives	P	P	P	P

[1] Certain variant codes cannot be used simultaneously.

P = New manufacture only.
R = On request.
NA = Not applicable.

HV Non-sparking and dust ignition proof cast iron motors

Sizes 315-450

Dimension drawings

Foot-mounted: IM B3 (IM 1001)

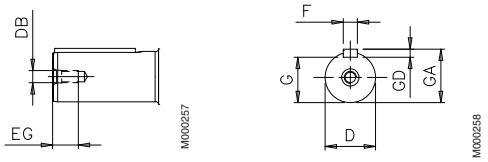

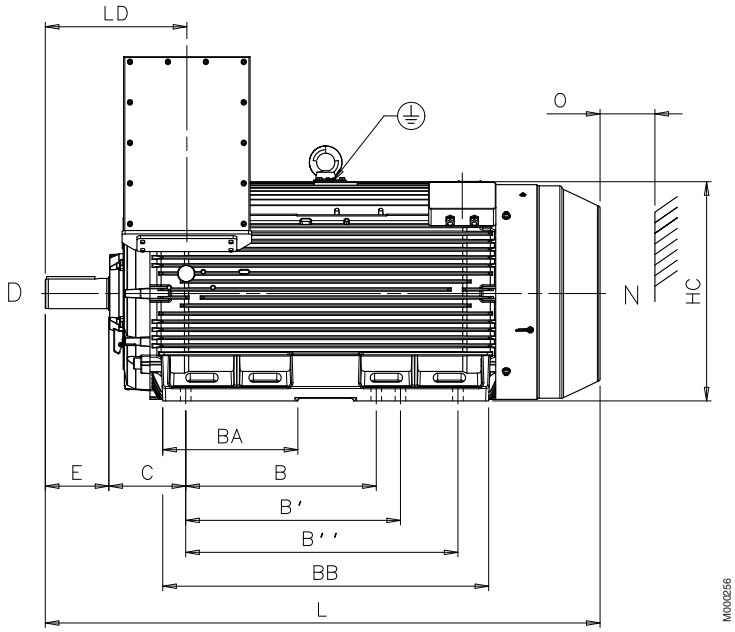

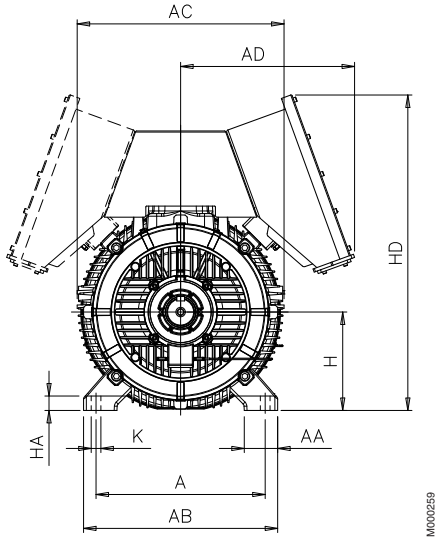

Motor size	Poles	A	AA	AB	AC	AD	B	B'	B"	BA	BB	C	D	DB	E	EG
315 LK	2	508	100	590	654	555	508	560	710	336	851	216	65	M20	140	42
315 LK	4-6	508	100	590	654	555	508	560	710	336	851	216	90	M24	170	52
355 LK	2	610	120	700	746	627	630	710	900	447	1077	254	70	M20	140	42
355 LK	4-6	610	120	700	746	627	630	710	900	447	1077	254	100	M24	210	51
400 L	2	710	150	840	834	627	900	1000	-	410	1156	224	80	M20	170	42
400 L	4-8	710	150	840	834	627	900	1000	-	410	1156	224	110	M24	210	50
400 LK	2	710	150	840	834	627	900	1000	1120	410	1316	224	80	M20	170	42
400 LK	4-8	710	150	840	834	627	900	1000	1120	410	1316	224	110	M24	210	50
450 L	2	800	160	950	966	613	1000	1120	1250	451	1421	250	80	M20	170	42
450 L	4-8	800	160	950	966	613	1000	1120	1250	451	1421	250	120	M24	210	50

Motor size	Poles	F	G	GA	GD	H	HA	HC	HD	K	L	LD	O
315 LK	2	18	58	69	11	315	40	644	1055	28	1490	355	115
315 LK	4-6	25	81	95	14	315	40	644	1055	28	1521	385	115
355 LK	2	20	62.5	74.5	12	355	52	725	1138	35	1764	398	250
355 LK	4-6	28	90	106	16	355	52	725	1138	35	1834	468	130
400 L	2	22	71	85	14	400	45	814	1225	35	1851	458	300
400 L	4-8	28	100	116	16	400	45	814	1225	35	1891	498	200
400 LK	2	22	71	85	14	400	45	814	1225	35	2011	478	300
400 LK	4-8	28	100	116	16	400	45	814	1225	35	2051	518	200
450 L	2	22	71	85	14	450	81	933	1378	42	2147	485	300
450 L	4-8	32	109	127	18	450	81	933	1378	42	2187	525	200

Tolerances:

A, B, C	± 0.8
D	ISO m6
F	ISO h9
H	+0 -1.0

Above table gives the main dimensions in mm.

For detailed drawings please see our web-pages 'www.abb.com/motors&generators' or contact us.

HV Non-sparking and dust ignition proof cast iron motors

Sizes 315-450

Dimension drawings

Flange-mounted;IM V1 (IM 3011)

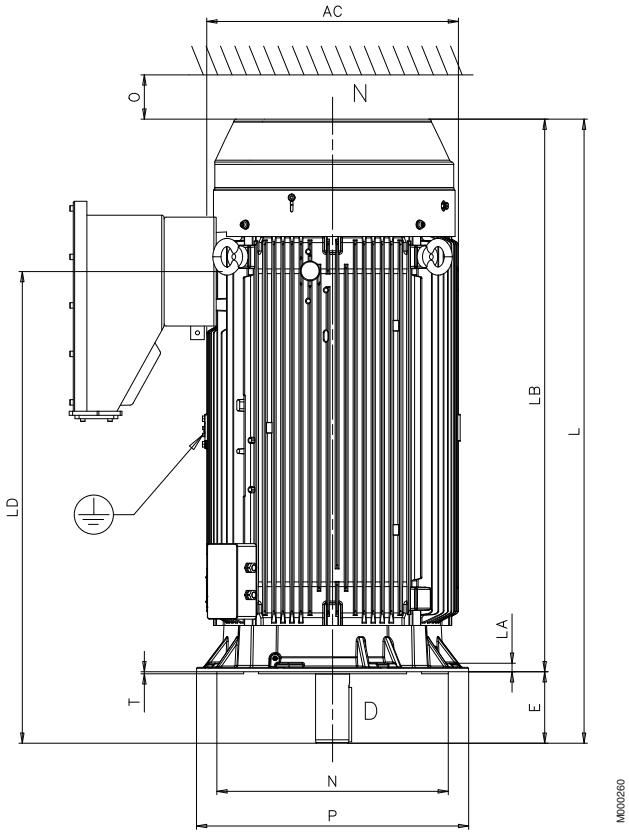

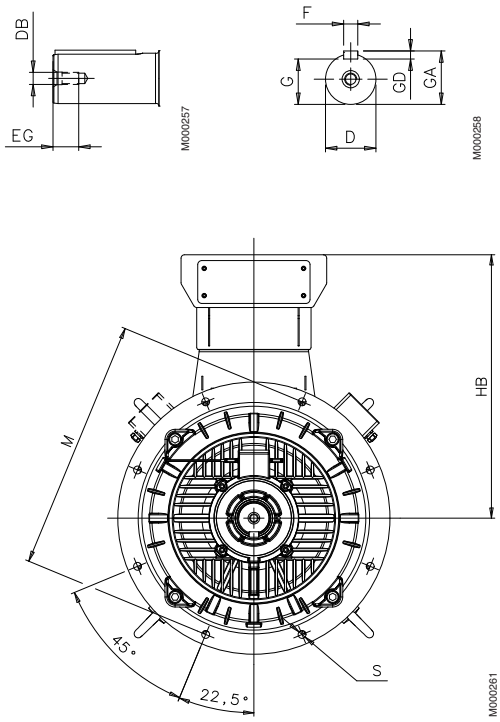

Motor size	Poles	AC	D	DB	E	EG	F	G	GA	GD	HB
315 LK	4-6	645	90	M24	170	52	25	81	95	14	731
355 LK	4-6	740	100	M24	210	51	28	90	106	16	774
400 L	4-8	827	110	M24	210	50	28	100	116	16	816
400 LK	4-8	810	110	M24	210	50	28	100	116	16	816
450 L	4-8	966	120	M24	210	50	32	109	127	18	887

Motor size	Poles	L	LA	LB	LD	M	N	O	P	S	T
315 LK	4-6	1521	25	1351	1115	600	550	115	660	23	6
355 LK	4-6	1834	25	1624	1386	740	680	130	800	23	6
400 L	4-8	1891	26	1681	1400	940	880	200	1000	28	6
400 LK	4-8	2051	26	1841	1540	940	880	200	1000	28	6
450 L	4-8	2187	33	1977	1645	1080	1000	200	1149	28	6

Tolerances:

D ISO m6
F ISO h9
N ISO js6 (315_)

Above table gives the main dimensions in mm.

For detailed drawings please see our web-pages 'www.abb.com/motors&generators' or contact us.

8

HV Non-sparking and dust ignition proof cast iron motors

Sizes 315-450

Dimension drawings

Foot- and flange-mounted motors: IM B35 (IM 2001)

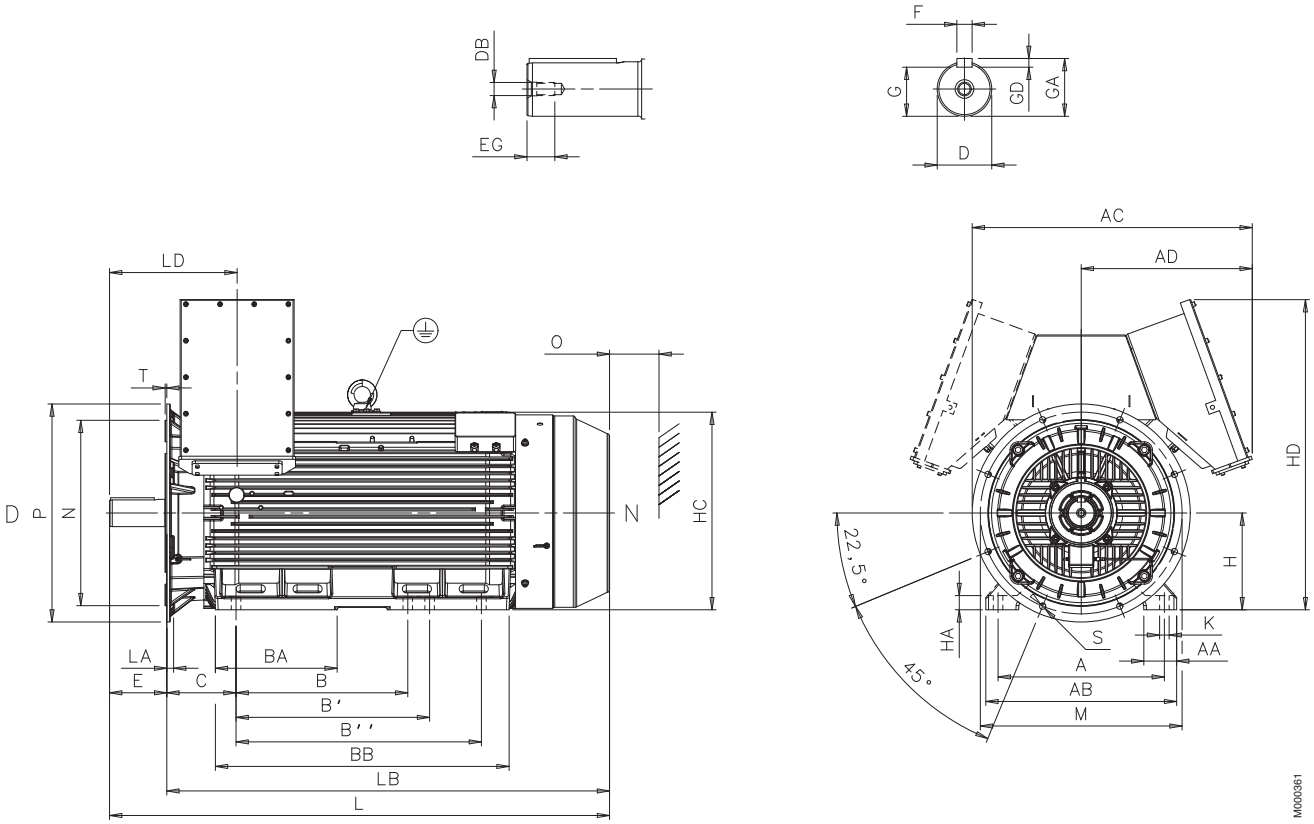

Motor size	Poles	A	AA	AB	AC	AD	B	B'	B"	BA	BB	C	D	DB	E	EG	F	G
315LK	2	508	100	590	885	555	508	560	710	336	851	216	65	M20	140	42	18	58
315LK	4-6	508	100	590	885	555	508	560	710	336	851	216	90	M24	170	52	25	81
355LK	2	610	120	700	1027	627	630	710	900	447	1077	254	70	M20	140	42	20	62.5
355LK	4-6	610	120	700	1027	627	630	710	900	447	1077	254	100	M24	210	51	28	90
400L	2	710	150	840	1127	627	900	1000	-	410	1156	224	80	M20	170	42	22	71
400L	4-12	710	150	840	1127	627	900	1000	-	410	1156	224	110	M24	210	50	28	100
400LK	2	710	150	840	1127	627	900	1000	1120	410	1316	224	80	M20	170	42	22	71
400LK	4-8	710	150	840	1127	627	900	1000	1120	410	1316	224	110	M24	210	50	28	100
450L	2	800	160	950	1188	613	1000	1120	1250	451	1421	250	80	M20	170	42	22	71
450L	4-8	800	160	950	1188	613	1000	1120	1250	451	1421	250	120	M24	210	50	32	109

Motor size	Poles	GA	GD	H	HA	HC	HD	K	L	LD	O	LA	LB	M	N	P	S	T
315LK	2	69	11	315	40	643	1055	28	1490	355	115	25	1350	600	550	660	23	6
315LK	4-6	95	14	315	40	643	1055	28	1521	385	115	25	1350	600	550	660	23	6
355LK	2	74.5	12	355	52	725	1138	35	1764	398	250	25	1624	740	680	800	23	6
355LK	4-6	106	16	355	52	725	1138	35	1834	468	130	25	1624	740	680	800	23	6
400L	2	85	14	400	45	814	1225	35	1851	458	300	26	1681	940	880	1000	28	6
400L	4-12	116	16	400	45	814	1225	35	1891	498	200	26	1681	940	880	1000	28	6
400LK	2	85	14	400	45	814	1225	35	2011	478	300	26	1841	940	880	1000	28	6
400LK	4-8	116	16	400	45	814	1225	35	2051	518	200	26	1841	940	880	1000	28	6
450L	2	85	14	450	81	933	1378	42	2147	485	300	33	1977	1080	1000	1149	28	6
450L	4-8	127	18	450	81	933	1378	42	2187	525	200	33	1977	1080	1000	1149	28	6

Tolerances:

A, B, D	± 0.8
D	ISO m6
F	ISO h9
H	+0 -1.0

Above table gives the main dimensions in mm.

For detailed drawings please see our web-pages 'www.abb.com/motors&generators' or contact us.

Accessories

Foundation studs

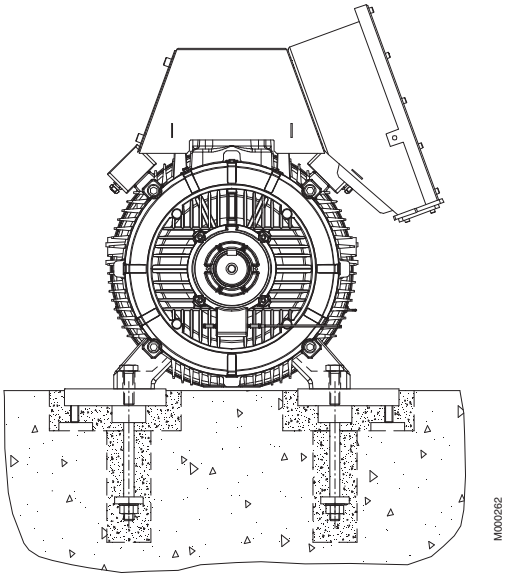

Frame size	Set code
315	FOST315-M3
355	FOST355-M3
400	FOST400-M3
450	FOST450-M3

The set code has to be mentioned on order.

Slide rails

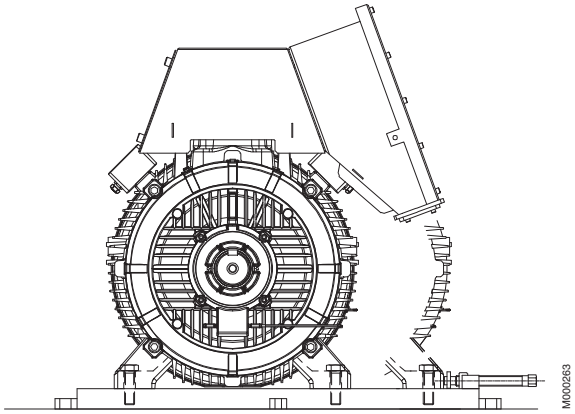

Frame size	Set code
315	SLRA315-M3
355	SLRA355-M3
400	SLRA400-M3
450	SLRA450-M3

The set code has to be mentioned on order.

Sole plates

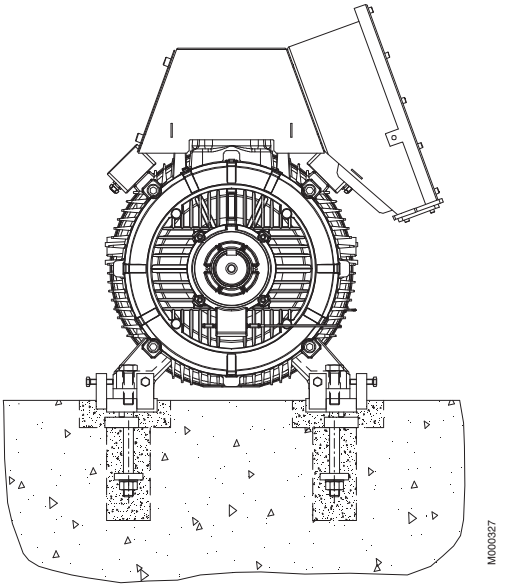

With anchor bolts for concrete foundation

Frame size	Set code
315	SOPL315A-M3
355	SOPL355A-M3
400 L	SOPL400A-M3
400 LK	SOPL400A-M3LK
450	SOPL450A-M3

The set code has to be mentioned on order.

Sole plates

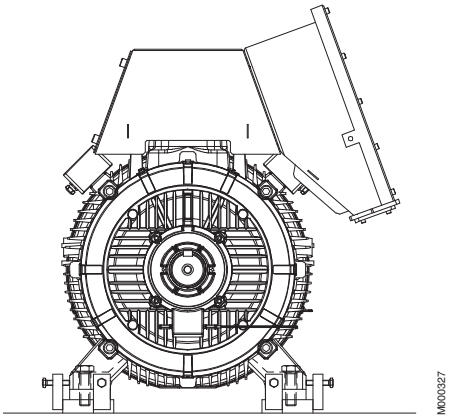

Without anchor bolts

Frame size	Set code
315	SOPL315-M3
355	SOPL355-M3
400 L	SOPL400-M3
400 LK	SOPL400-M3LK
450	SOPL450-M3

The set code has to be mentioned on order.

Accessories

Protective roof

Variant code 005

Motor size	Pole no	L	LL
315 LK	4-6	1591	1421
355 LK	4-6	1951	1741
400 L	4-8	2008	1798
400 LK	4-8	2168	1958
450 L	4-8	2389	2179

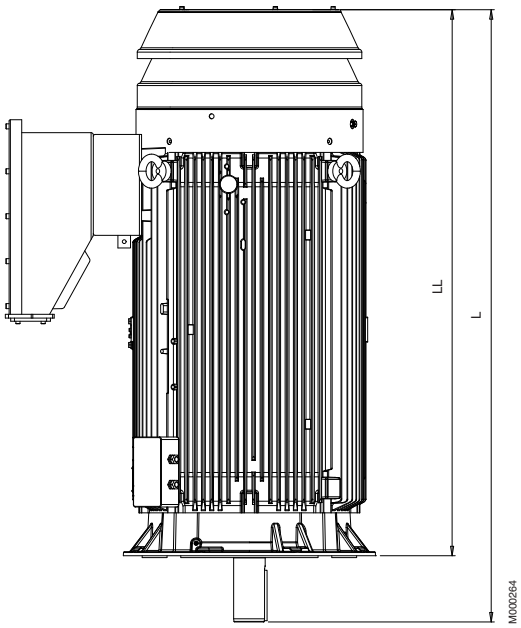

Provision for vibration sensors

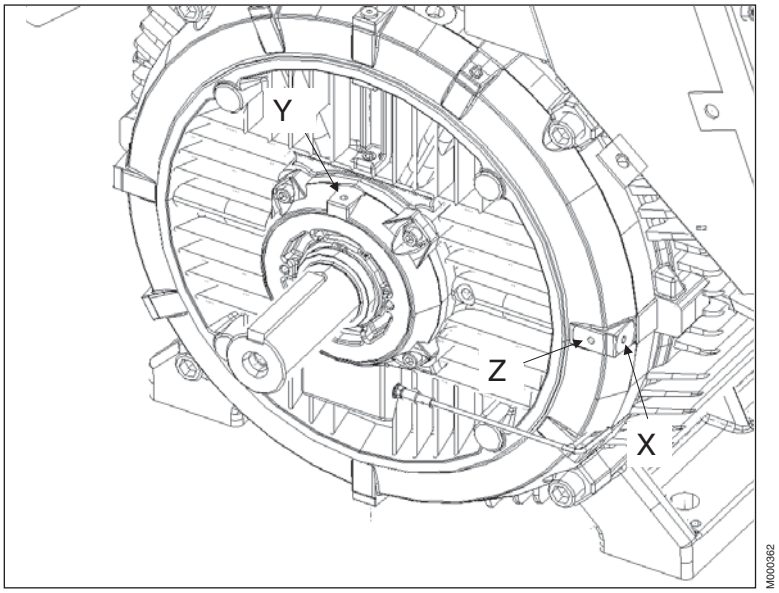

Provision for vibration sensors M8x1. XYZ-directions. Available only for D-end.

Motor construction

Typical exploded view of high voltage cast iron motor

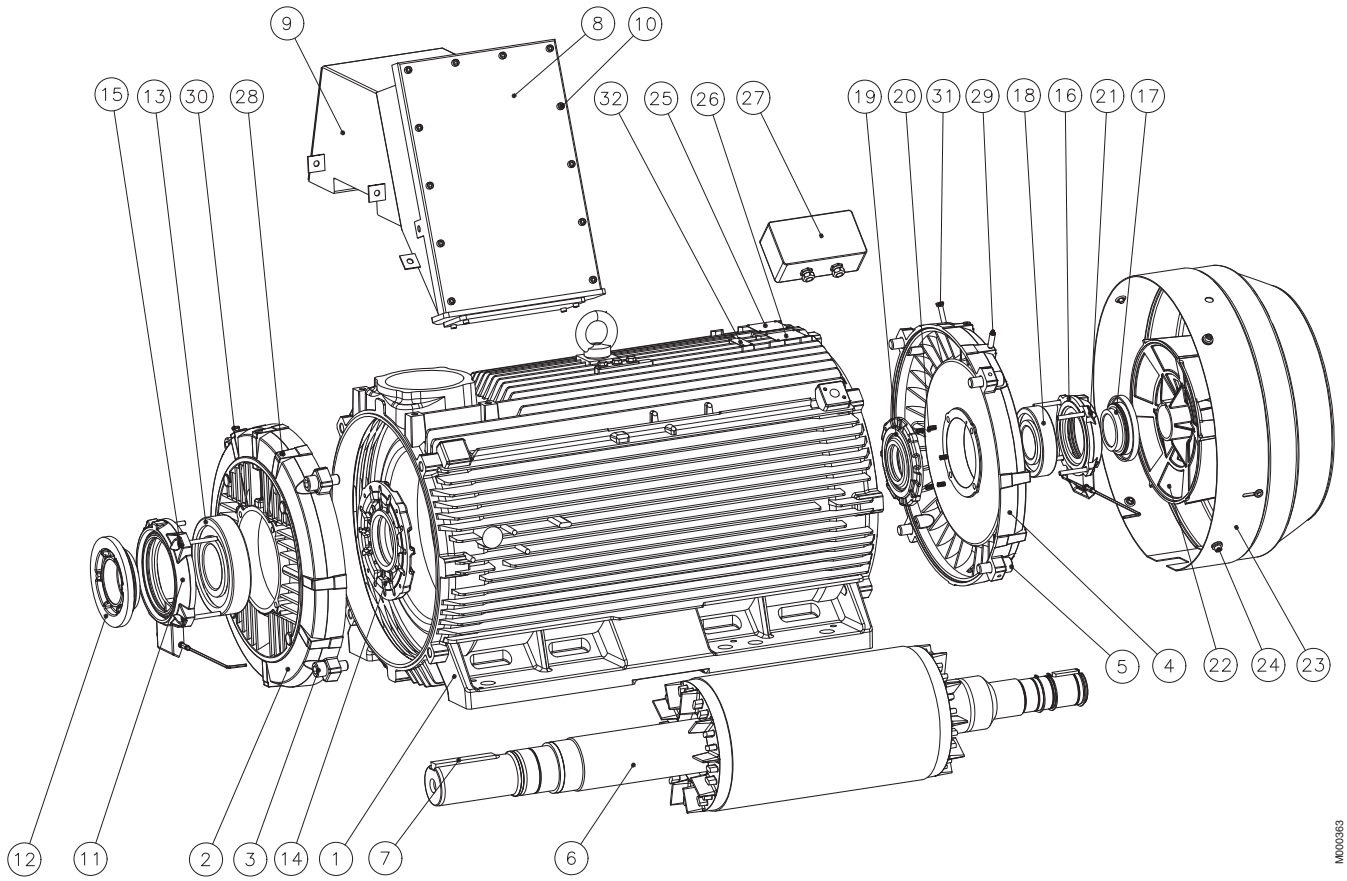

1	Stator frame	17	Valve disc with labyrinth seal, D-end
2	End shield, D-end	18	Bearing, N-end
3	Screws for end shield, D-end	19	Inner bearing cover, N-end
4	End shield, N-end	20	Spring
5	Screws for end shield, N-end	21	Screws for bearing cover, N-end
6	Rotor with shaft	22	Fan
7	Key, D-end	23	Fan cover
8	Main terminal box	24	Screws for fan cover
9	Middle box	25	Rating plate
10	Screws for terminal box cover	26	Lubrication plate
11	Outer bearing cover, D-end	27	Auxiliary terminal box
12	Valve disc with labyrinth seal, D-end	28	Grease nipple, D-end
13	Bearing, D-end	29	Grease nipple, N-end
14	Inner bearing cover	30	SPM nipple, D-end
15	Screws for bearing cover, D-end	31	SPM nipple, N-end
16	Outer bearing cover, N-end	32	Additional identification plate

HV Non-sparking and dust ignition proof cast iron motors in brief, basic design

Motor size			315	355	400	450
Stator	Material		Cast iron EN-GJL-250 EN 1561			
	Paint colour shade		Blue, Munsell 8B 4.5/3.25 / NCS 4822 B05G / RAL 5014			
	Paint thickness		Two-pack epoxy paint, thickness ≥ 180 µm			
Bearing end shields	Material		Cast iron EN-GJL-200 SFS-EN 1561			
	Paint colour shade		Blue, Munsell 8B 4.5/3.25 / NCS 4822 B05G / RAL 5014			
	Paint thickness		Two-pack epoxy paint, thickness ≥ 180 µm			
Bearings	D-end	2 pole	6316M/C3	6316M/C3	6317M/C3	6317M/C3
		4-8 pole	6319/C3	6322/C3	6324/C3	6326M/C3
	N-end	2 pole	6316M/C3	6316M/C3	6317M/C3	6317M/C3
		4-8 pole	6316/C3	6316/C3	6319/C3	6322/C3
Axially-locked bearings	Inner bearing cover		As standard, locked at D-end			
Bearing seal			As standard, labyrinth seal in both ends.			
Lubrication			Regreasable bearings Regreasing nipples M10x1 DIN 71412 A			
SPM-nipples			As standard			
Rating and lubrication plate	Material		Stainless steel, EN 10088, thickness 0.5 mm.			
Terminal box	Frame material		Structural steel S235JRG2-EN-10025, thickness 3 mm.			
	Cover material		Structural steel S235JRG2-EN-10025, thickness 3 mm.			
	Cover screws material		Blue passivated.			
Connections	Cable entries		Blind gland plate.			
	Terminals		3 terminals for connection with cable lugs (not included) Grounding locations on frame and terminal box (in- and outside)			
Fan	Material		Glass reinforced polypropylene, aluminum, steel or glass reinforced polyamide fan with metal hub. Direction of rotation / fans (IC411) - glass reinforced polypropylene bidirectional - aluminum birectional - steel bidirectional - glass reinforced polyamide fan unidirectional.			
Fan cover	Material		Steel			
	Paint colour shade		Blue, Munsell 8B 4.5/3.25 / NCS 4822 B05G / RAL 5014			
	Paint thickness		Two-pack epoxy polyester powder, thickness ≥ 80 µm			
Stator winding	Material		Form wound copper, VPI			
	Insulation		Insulation class F			
	Winding protection		PT100, 6 pieces			
Rotor winding	Material		Pressure die-cast aluminum			
Balancing method			Half key balancing as standard			
Key ways			Open key way			
Heating elements			2x80 W	2x80 W	2x80 W	2x80 W
Drain holes			Standard, open on delivery.			
Enclosure			IP 55, higher protection as option.			
Cooling method			IC 411			

ABB High voltage motor's product offer for hazardous areas

Flameproof motors

Type of protection: Ex d IIB/IIC T4, Ex de, IIB/IIC T4
Features: LV-11kV, 50/60 Hz, 2-18 poles, VSD applications, IP55, IC411, IC511, Horizontal or Vertical

Motor type	IEC frame size	Output kW
Ribs cooled	355 - 500	150 - 1250 kW
Tubes cooled	500 - 710	800 - 4500 kW

Pressurised motors

Type of protection: Ex px, Ex pxe; Temperature classes T1-T4, Gas groups A, B anc C
Features: 50/60 Hz, 2-24 poles, VSD applications, acc. to ATEX Directive and IEC standards

Motor type	IEC frame size	Output kW
Induction motors	355 - 1120	up to 23 MW (31000 HP)
Synchronous motors	710 - 2500	up to 55 MW (74000 HP)

Increased safety motors

Type of protection: Ex e, Temperature classes T1-T3, Gas groups A, B and C
Features: 50/60 Hz, 2-24 poles, VSD applications, acc. to ATEX Directive and IEC Standards

Motor type	IEC frame size	Output kW
Induction motors	355 - 1120	up to 10 MW (13410 HP)

Non-sparking motors

Type of protection: Ex nA, T1-T4, Gas groups A,B and C
Features: 50/60 Hz, 2-24 poles, VSD applications, acc. to ATEX Directive and IEC Standards, CSA/US certified

Motor type	IEC frame size	Output kW
Induction motors	315 - 1120	up to 23 MW (31000 HP)
Synchronous motors	710 - 2500	up to 55 MW (74000 HP)

Motors for North America (NEC and CEC)

Type of protection: Class I Division 2, Class I Zone 2, Class II Division 2, Class III; T1-T4
Features: 50/60 Hz, 2-24 poles, VSD applications, designed for North American markets, CSA/US-certified

Motor type	IEC frame size	Output kW
Induction motors	315 - 1120	up to 23 MW (31000 HP)
Synchronous motors	710 - 2500	up to 55 MW (74000 HP)

More information for these motors can be found from web-pages:

www.abb.com/motors&generators

ABB Motors' total product offer

ABB offers several comprehensive ranges of AC motors and generators. We manufacture synchronous motors for even the most demanding applications, and a full range of low and high voltage induction motors. Our in-depth knowledge of virtually every type of industrial processing ensures we always specify the best solution for your needs.

M000328

Low voltage motors and generators

General purpose motor for standard applications
– Aluminum motors
– Steel motors
– Cast iron motors
– Open drip proof motors
– Global motors
– Brake motors
– Single phase motors
– Servomotors

Process performance motors for more demanding applications
– Aluminum motors
– Cast iron motors (IEC and NEMA)
– Motors for high ambient temperatures
– Permanent magnet motors
– High speed motors
– Wind turbine generators
– Smoke venting motors
– Water cooled motors
– Motors for roller table drives

Motors for hazardous areas
– Flameproof motors
– Increased safety motors
– Non-sparking motors
– Dust ignition proof motors

Marine motors
– Aluminum motors
– Steel motors
– Cast iron motors
– Open drip proof motors

High voltage and synchronous motors and generators

– High voltage cast iron motors
– Induction modular motors
– Slip ring motors
– Motors for hazardous areas
– Synchronous motors and generators
– DC motors and generators

Visit our web site

www.abb.com/motors&generators

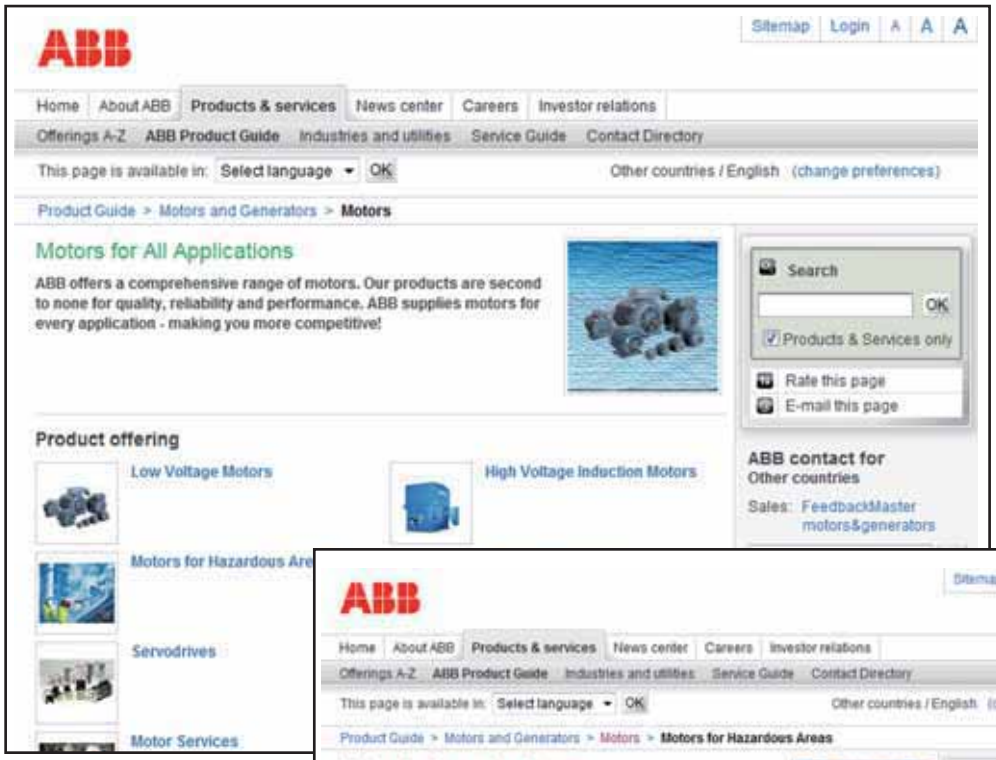

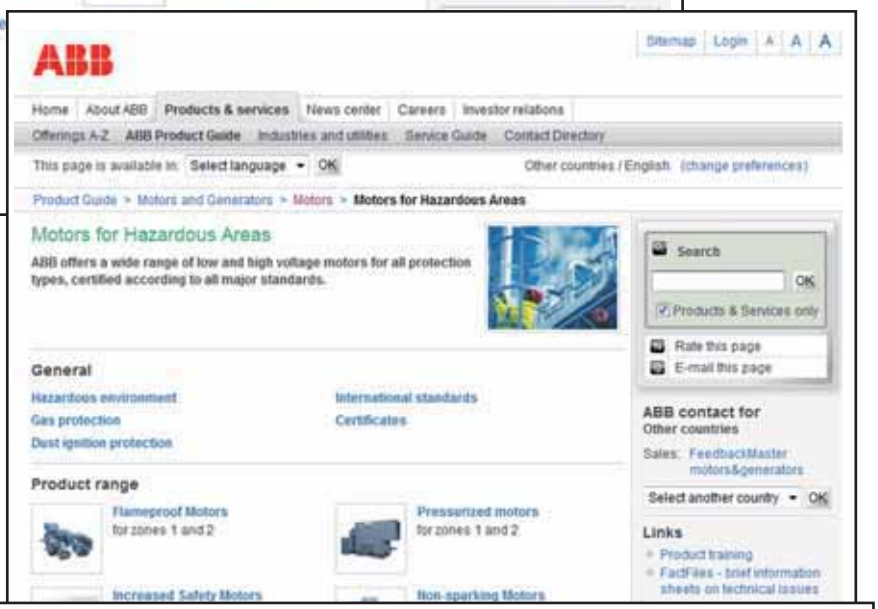

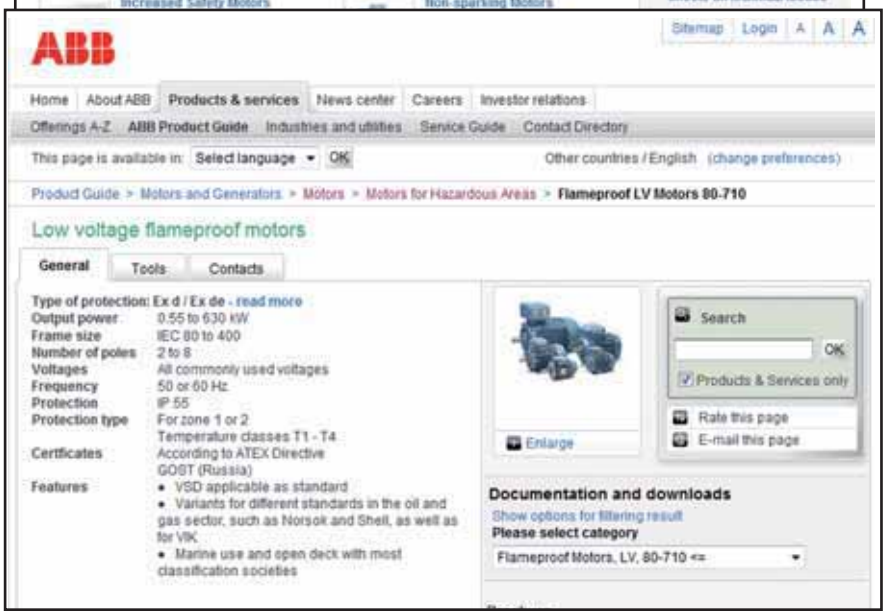

Motors and Generators
=> Motors
=> Low Voltage Motors
General purpose motors
Process performance motors
=> Motors for hazardous areas
Hazardous environment
International standards
Certificates
Gas protection
Dust ignition protection
Product range
Marine motors
NEMA motors
Permanent magnet motors
Smoke venting motors
Water cooled motors
Fan application motors
Roller table motors
=> **Generators**
Wind turbine generators

Low Voltage Motors

Manufacturing sites (*) and some of the larger sales companies.

Australia
ABB Australia Pty Ltd
601 Blackburn Road
Notting Hill VIC 3168
Tel: +61 (0) 8544 0000
Fax: +61 (0) 8544 0001

Austria
ABB AG
Clemens Holzmeisterstrasse 4
AT-1810 Wien
Tel: +43 (0) 1 601 090
Fax: +43 (0) 1 601 09 8305

Belgium
Asea Brown Boveri S.A.-N.V.
Hoge Wei 27
BE-1930 Zaventem
Tel: +32 (0) 2 718 6311
Fax: +32 (0) 2 718 6657

Canada
ABB Inc., BA Electrical Machines
10300 Henri-Bourassa Blvd, West,
Saint-Laurent, Quebec
Canada H4S 1N6
Tel: +1 514 832-6583
Fax: +1 514 332-0609

China*
ABB Shanghai Motors Co., Ltd.
88 Tianning Road
Minhang(Economical and Techno-
logical Development Zone)
200245 Shanghai
Tel: +86 21 5472 3133
Fax: +86 21 5472 5025

Chile
Asea Brown Boveri S.A.
P.O.Box 581-3
Santiago
Tel: +56 (0) 2 5447 100
Fax: +56 (0) 2 5447 405

Denmark
ABB A/S
Automation Products
Emil Neckelmanns Vej 14
DK-5220 Odense SØ
Tel: +45 65 47 70 70
Fax: +45 65 47 77 13

Finland*
ABB Oy
Motors
P.O.Box 633
FI-65101 Vaasa
Tel: +358 (0) 10 22 11
Fax: +358 (0) 10 22 47372

France
ABB Entrelec
ZA La Boisse BP 90145
300 Rue des Prés-Seigneurs
FR-01124 Montluel Cedex
Tel: +33 4 37 40 40 00
Fax: +33 4 37 40 40 72

Germany
ABB Automation Products GmbH
Motors & Drives
Wallstaedter Strasse 59
DE-68526 Ladenburg
Tel: +49 (0) 6203 717 717
Fax: + 49 (0) 6203 717 600

Hong Kong
ABB (Hong Kong) Ltd.
Tai Po Industrial Estate,
3 Dai Hei Street,
Tai Po, New Territories,
Hong Kong
Tel: +852 2929 3838
Fax: +852 2929 3505

India*
ABB Ltd.
32, Industrial Area, N.I.T
Faridabad 121 001
Tel: +91 (0) 129 502 3001
Fax: +91 (0) 129 502 3006

Indonesia
PT. ABB Sakti Industri
JL. Gajah Tunggal Km.1
Jatiuwung, Tangerang 15136
Banten, Indonesia
Tel: + 62 21 590 9955
Fax: + 62 21 590 0115 - 6

Ireland
Asea Brown Boveri Ltd
Components Division
Belgard Road
Tallaght, Dublin 24
Tel: +353 (0) 1 405 7300
Fax: +353 (0) 1 405 7327

Italy*
ABB SACE SpA
LV Motors
Via dell' Industria 18
IT-20010 Vittuone, Milano
Tel: +39 02 90341
Fax: +39 02 9034 7289

Japan
ABB K.K.
26-1 Cerulean Tower
Sakuragaoka-cho, Shibuya-ku
Tokyo 150-8512
Tel: +81 (0) 3 578 46251
Fax: +81 (0) 3 578 46260

Korea
ABB Korea Ltd.
7-9fl, Oksan Bldg., 157-33
Sungsung-dong, Kangnam-ku
Seoul
Tel: +82 2 528 2329
Fax: +82 2 528 2338

Malaysia
ABB Malaysia Sdn. Bhd.
Lot 608, Jalan SS 13/1K
47500 Subang Jaya, Selangor
Tel: +60 3 5628 4888
Fax: +60 3 5631 2926

Mexico
ABB México, S.A. de C.V.
Apartado Postal 111
CP 54000 Tlalnepantla
Edo. de México, México
Tel: +52 5 328 1400
Fax: +52 5 390 3720

The Netherlands
ABB B.V.
Dept. LV motors (APP2R)
P.O.Box 301
NL-3000 AH Rotterdam
Tel: +31 (0) 10 4078 879
Fax: +31 (0) 10 4078 345

Norway
ABB AS
P.O.Box 154 Vollebekk
NO-0520 Oslo
Tel: +47 22 872 000
Fax: +47 22 872 541

Russia
ABB Industrial & Building Systems
Ltd.
Business Centre "Krugozor"
Obrucheva 30/1, Building 2
Moscow 117861
Tel: +7 495 960 2200, 956 93 93
Fax: +7 495 960 2209, 230 63 46

Singapore
ABB Industry Pte Ltd
2 Ayer Rajah Crescent
Singapore 139935
Tel: +65 6776 5711
Fax: +65 6778 0222

Spain*
Asea Brown Boveri S.A.
Automation Products - Fábrica
Motores
P.O.Box 81
ES-08200 Sabadell
Tel: +34 93 728 8500
Fax: +34 93 728 8741

Sweden*
ABB AB
LV Motors
SE-721 70 Västerås
Tel: +46 (0) 21 329 000
Fax: +46 (0) 21 329 140

Switzerland
ABB Schweiz AG
Normelec/CMC Components
Motors&Drives
Badenerstrasse 790
Postfach
CH-8048 Zürich
Tel: +41 (0) 58 586 0000
Fax: +41 (0) 58 586 0603

Taiwan
ABB Ltd.
6F, No. 126, Nanking East Road,
Section 4i
Taipei, 105 Taiwan, R.O.C.
Tel: +886 (0) 2 2577 6090
Fax: +886 (0) 2 2577 9467

Thailand
ABB Limited (Thailand)
161/1 SG Tower,
Soi Mahadlekluang 3,
Rajdamri, Bangkok 10330
Tel: +66 2 665 1000
Fax: +66 2 665 1042

The United Kingdom
ABB Ltd
Drives, Motors and Machines
Daresbury Park
Daresbury, Warrington
Cheshire, WA4 4BT
Tel: +44 (0) 1925 741 111
Fax: +44 (0) 1925 741 212

USA
ABB Inc.
Low Voltage Motors
16250 W. Glendale Drive
New Berlin, WI 53151
Tel: +1 262 785 3200
Fax: +1 262 780 8888

Venezuela
Asea Brown Boveri S.A.
P.O.Box 6649
Carmelitas,
Caracas 1010A
Tel: +58 (0) 2 238 2422
Fax: +58 (0) 2 239 6383

Printed in Finland, 01-2008/8000, Waasa Graphics Oy

www.abb.com/motors&generators
online.abb.com/bol

9AKK104006 EN 01-2008
Catalogue BU/Ex-motors